EPSON

TM-H6000VI

Technical Reference Guide

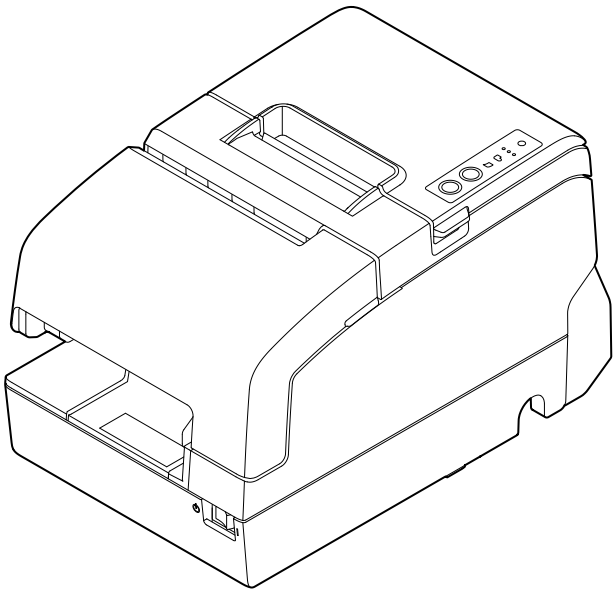

Product Overview

Describes features of the product.

Setup

Describes setup and installation of the product and peripherals.

Advanced Usage

Describes advanced usage methods for the product.

Application Development Information

Describes how to control the printer and necessary information when you develop applications.

Handling

Describes how to handle the product.

Troubleshooting

Describes actions to take when a trouble occurs.

Replacement of the TM-H6000V

Describes precautions for replacement.

Appendix

Describes general specifications and character code tables.

M00159202
Rev. C

Cautions

- No part of this document may be reproduced, stored in a retrieval system, or transmitted in any form or by any means, electronic, mechanical, photocopying, recording, or otherwise, without the prior written permission of Seiko Epson Corporation.
- The contents of this document are subject to change without notice. Please contact us for the latest information.
- While every precaution has been taken in the preparation of this document, Seiko Epson Corporation assumes no responsibility for errors or omissions.
- Neither is any liability assumed for damages resulting from the use of the information contained herein.
- Neither Seiko Epson Corporation nor its affiliates shall be liable to the purchaser of this product or third parties for damages, losses, costs, or expenses incurred by the purchaser or third parties as a result of: accident, misuse, or abuse of this product or unauthorized modifications, repairs, or alterations to this product, or (excluding the U.S.) failure to strictly comply with Seiko Epson Corporation's operating and maintenance instructions.
- Seiko Epson Corporation shall not be liable against any damages or problems arising from the use of any options or any consumable products other than those designated as Original Epson Products or Epson Approved Products by Seiko Epson Corporation.

Trademarks

Microsoft, Windows, and Windows Vista are registered trademarks of Microsoft Corporation in the United States and/or other countries.

Wi-Fi®, WPA™, WPA2™, and WPA3™ are either registered trademarks or trademarks of Wi-Fi Alliance®.

The Bluetooth® word mark and logos are registered trademarks owned by Bluetooth SIG, Inc. and any use of such marks by Seiko Epson Corporation is under license.

IOS is a trademark or registered trademark of Cisco in the U.S. and other countries and is used under license.

Apple, Apple TV, Apple Watch, iPad, iPad Air, iPad Pro, iPhone, and Lightning are trademarks of Apple Inc., registered in the U.S. and other countries. tvOS is a trademark of Apple Inc.

iBeacon is a trademark of Apple Inc.

Android™ is a trademark of Google LLC.

QR Code is a registered trademark of DENSO WAVE INCORPORATED in Japan and other countries.

All other trademarks are the property of their respective owners and used for identification purpose only.

ESC/POS Command System

Epson ESC/POS is a proprietary POS printer command system that includes patented or patent-pending commands. ESC/POS is compatible with most Epson POS printers and displays.

ESC/POS is designed to reduce the processing load on the host computer in POS environments. It comprises a set of highly functional and efficient commands and also offers the flexibility to easily make future upgrades.

©Seiko Epson Corporation 2024–2025

For Safety

Key to Symbols

The symbols in this manual are identified by their level of importance, as defined below. Read the following carefully before handling the product.

⚠ **WARNING**	You must follow warnings carefully to avoid serious bodily injury.
⚠ **CAUTION**	Provides information that must be observed to prevent damage to the equipment or loss of data. • Possibility of sustaining physical injuries. • Possibility of causing physical damage. • Possibility of causing information loss.
CAUTION	Provides information that must be observed to avoid damage to your equipment or a malfunction.
NOTE	Provides important information and useful tips.

Warnings

⚠ **WARNING**	• Shut down your equipment immediately if it produces smoke, a strange odor, or unusual noise. Continued use may lead to fire. Immediately unplug the equipment and contact qualified service personnel for advice. • Never attempt to repair this product yourself. Improper repair work can be dangerous. • Never disassemble or modify this product. Tampering with this product may result in injury or fire. • Do not use this product with any voltage other than the specified one. Doing so may lead to fire or electric shock. • For the power cable, use either the included one or a designated one that meets the relevant safety standards of the area where you plan to use it. • Do not allow foreign matter to fall into the equipment. Penetration by foreign objects may lead to fire. • If water or other liquid spills into this equipment, unplug the AC cable immediately, and contact qualified service personnel for advice. Continued usage may lead to fire. • Do not use aerosol sprayers containing flammable gas inside or around this product. Doing so may cause fire. • Do not connect cables in ways other than those mentioned in this manual. Different connections may cause equipment damage and burning.

Cautions

CAUTION

- Be sure to set this equipment on a firm, stable, horizontal surface. Product may break or cause injury if it falls.
- Do not use in locations subject to high humidity or dust levels. Excessive humidity and dust may cause equipment damage or fire.
- Do not place heavy objects on top of this product. Never stand or lean on this product. Equipment may fall or collapse, causing breakage and possible injury.
- Take care not to injure your fingers on the manual cutter
  - When you remove printed paper
  - When you perform other operations, such as loading/replacing roll paper
- To ensure safety, unplug this product before leaving it unused for an extended period.
- Do not connect a telephone line to the drawer kick connector or the display module connector; otherwise the printer and the telephone line may be damaged.
- Do not put your hand inside this product or touch the white flat cable during printing.
- Make sure cords and foreign objects are not caught in the printer.
- Do not connect a LAN cable to the DM-D connector; doing so may damage the connected device.
- Do not open the covers during printing or autocutting.
- To prevent a paper jam, do not prevent paper from being ejected from the paper exit, and do not pull the paper being ejected.
- Use the product under the environmental conditions specified in the manual. (See "Product Specifications" on page 133.)

CAUTION

If this product is used in a place where silicon-based gases including siloxane (silicon adhesive, silicon oil, silicon powder, etc.) or malignant gases (nitric acid, hydrogen sulfide, ammonia, chlorine, etc.) are present in the air, contact failure may occur in mechanical contacts such as mechanical switch or DC motor in a short time due to adhesion or oxidation of the insulation film.

Caution Labels

The caution labels on the product indicate the following precautions.

CAUTION:

Do not touch the thermal head because it can be very hot after printing.

CAUTION:

Do not touch the cables in the product. Doing so can cause product malfunctions.

Restriction of Use

When this product is used for applications requiring high reliability/safety, such as transportation devices related to aviation, rail, marine, automotive, etc.; disaster prevention devices; various safety devices, etc.; or functional/precision devices, etc., you should use this product only after giving consideration to including fail-safes and redundancies into your design to maintain safety and total system reliability. Because this product was not intended for use in applications requiring extremely high reliability/safety, such as aerospace equipment, main communication equipment, nuclear power control equipment, or medical equipment related to direct medical care, etc., please make your own judgment on this product's suitability after a full evaluation.

Open Source Software License

This product uses open source software in addition to Epson proprietary software.

For information of the open source software used in this product, see the following URL.

https://xxx.xxx.xxx.xxx/licenses.html

For "xxx.xxx.xxx.xxx" in the above URL, input your printer's IP address.

About this Manual

Aim of the Manual

This manual provides developers/engineers with all the necessary information for design, development and installation of a POS system, and also design and development of a printer application.

NOTE

For Users in Europe, the Middle East and Africa
Models that comply with the cybersecurity requirements of the European Radio Equipment Directive (RED) 2014/53/EU have had changes made to specifications related to network communications, such as enhanced security.
These specification changes affect when using wired LAN, wireless LAN, and Bluetooth with compliant models.
For information on how to identify whether a product is compliant, the specifications of compliant products, and precautions for use, refer to the Cybersecurity Enhancement Supplementary Guide published on the model-specific manual page at the URL below.
☞ https://epson.sn

Manual Content

The manual is made up of the following sections:

Chapter 1	Product Overview
Chapter 2	Setup
Chapter 3	Advanced Usage
Chapter 4	Application Development Information
Chapter 5	Handling
Chapter 6	Troubleshooting
Chapter 7	Replacement of the TM-H6000V
Appendix	Product Specifications Character Code Tables

Contents

■ **For Safety** **3**
Key to Symbols 3
Warnings 3
Cautions 4
■ **Caution Labels** **4**
■ **Restriction of Use** **5**
■ **Open Source Software License** **5**
■ **About this Manual** **6**
Aim of the Manual 6
Manual Content 6
■ **Contents** **7**

Product Overview **13**

■ **Features** **13**
■ **Product Configurations** **15**
Models 15
NFC Tag 15
Case color 15
Accessories 15
■ **Part Names and Functions** **17**
Control Panel 18
Connectors 19
Online and Offline 20
■ **Status and Errors** **21**
LED on/flashing patterns 21
Printer operating status 22
Error Status 23
■ **NV Memory** **26**
NV Graphics Memory 26
User NV Memory 26
Memory Switches (Customize Value Settings) 26
R/E (Receipt Enhancement) 26
Maintenance Counter 27
■ **Simple Setup for Wireless LAN** **28**
About SimpleAP 29
About Wi-Fi Direct 29
■ **Useful Functions for Smart Devices** **30**
NFC Tag 30
QR Code 30

■ Printing Using Multiple Interfaces 31

Setup 32

■ Flow of Setup 32
■ Removing the Protective Materials and Tape 33
■ Connecting the AC adapter 34
Connecting the AC adapter 34
■ Connecting the Printer to the Host 36
USB Type-B Interface 36
Ethernet Interface 36
Wireless LAN Interface 39
Serial Interface 42
USB PlusPower Interface 43
■ Connecting the Cash Drawer 44
Required specifications of cash drawer 44
Connecting the drawer kick cable 45
■ Connecting the Optional Customer Display 46
DM-D30/DM-D70 46
DM-D110/DM-D210 46
■ Attaching and Removing the Connector Cover 47
■ Installing and Replacing the Ribbon Cartridge (ERC-32) 48
■ Installing and Replacing the Ribbon Cartridge for Endorsement Printing (ERC-43)50
■ Installing the Roll Paper 53
■ Test Printing 55
Test Printing on Roll Paper 55
Test Printing on Slip Paper 55
Test Printing on Validation Paper 56
■ Attaching the Power Switch Cover 57
■ Applying the LED Information Label 58
■ RTC Settings 60
■ Adjusting the Paper Roll Near-End Sensor 61

Advanced Usage 62

■ Setting the DIP Switches 62
Setting Procedure 62
When a Serial Interface is Connected 63
When Another Interface is Connected 64
Selecting the Print Density (DIP Switches 2-3/2-4) 65
Selecting the BUSY Status 65

■ **Software Settings** **66**

Overview of Each Function 68
Setting and reference items shared by Ethernet/Wi-Fi 74
Setting and reference items for Ethernet 76
Setting and reference items for Wi-Fi 77

■ **MAC Address Confirmation** **78**

■ **Setting/Checking Modes** **79**

Self-test Mode 81
NV Graphics Information Print Mode 82
Receipt Enhancement Information Print Mode 83
Software Setting Mode 84
Restore Default Values Mode 86
Interface Setup Mode 87
TM-Intelligent Settings Information Print Mode 88
Peripheral Device Information Print Mode 88
Hexadecimal Dumping Mode 89

■ **Printing a Status Sheet** **90**

■ **Resetting the Interface Settings** **93**

■ **TM-Intelligent Function** **94**

Server direct print 94
Status Notification 94

■ **Web Config** **95**

How to Start Web Config 95
What can be Configured in Web Config 95

Application Development Information 96

■ **Controlling the Printer** **96**

ePOS-Print XML 96
ePOS-Device XML 96
ESC/POS 96

■ **Controlling the Cash Drawer** **97**

■ **Software** **98**

Development Kits 98
Drivers 99
Utilities 99
Others 100
Download 100

■ **Precautions when Developing Applications** **101**

Minimum Paper Length when Cutting 101
Notes on Printing Barcodes and Two-Dimensional Symbols 101

Handling 102

■ **Installing and Replacing the Roll Paper** 102

■ **Inserting Slip Paper** 104

■ **Inserting Validation Paper** 105

■ **Cleaning the Product** 106

Cleaning the Printer Case 106
Cleaning the Thermal Head and the Platen Roller 106
Cleaning the MICR Head 107

■ **Preparing for Transport** 108

Troubleshooting 109

■ **Print Quality Problem** 110

Print Quality Problem (Receipt printer) 110
Print Quality Problem (Slip/ Validation/ Endorsement printer) 110

■ **Setting slip paper does not start printing** 112

Slip LED is flashing continuously 112
Slip LED is flashing 2 times 112
Slip LED is flashing 3 times 112
Slip LED is off 112
Slip LED does not change from flashing to lit up 113

■ **Even when slip paper is set, paper is fed and an error occurs** 114

■ **Slip LED does not turn off even though slip paper is removed** 114

■ **MICR cannot be read** 114

■ **The customer display does not appear** 116

Does not appear on the customer display 116
Text is garbled 116

■ **The cash drawer does not open** 116

■ **Auto cutter error** 117

■ **Paper jam** 120

Roll paper is jammed 120
Slip paper is jammed 121

■ **Roll paper cover will not open** 123

Printing stop by cover open 124

■ **Printing from the computer is disabled/Printing was suddenly stopped** 125

Printer is offline 125
Reconnect the printer and the computer 125
LAN setting 125
Check installation of printer driver 125

■ **Power does not turn on** 126

Replacement of the TM-H6000V 127

■ **Compatibility** 128

Printing 128
Print Density 128
Printable Area 128
Cutting Method 128
Receive Buffer 128
Memory Capacity 129
Electrical Characteristics 129
DIP Switches 129
Printer Status 129
Logo Registration 129
Driver Compatibility 129
USB Low Power Consumption Mode 129
Maintenance Counter 129
Overall Dimensions 130

■ **Additional Functions and Functional Improvements** 131

Print Speed 131
SimpleAP Function 131
NFC* 131
Software Settings 132
TM-Intelligent function 132

Appendix 133

■ **Product Specifications** 133

Printing Specifications 135
Character Specifications 137
Paper Specifications 139
Printable Area 142
Printing and Cutting Positions 144
Ribbon Cassette 144
Notes on using the endorsement printer 145
MICR Reader (Factory-Installed Option) 145
Barcode/ Two-dimensional symbol/composite symbol 148
Notes on using the multi-tone graphics printing 149
Electrical Characteristics 150
Reliability 151
Environmental Conditions 152
External Dimensions and Mass 153

■ **Specifications of Interfaces and Connectors** 154

USB Interface 154
Network Interface 155

Default Password for Setup / Default Passphrase for SimpleAP 157
RS-232 Serial Interface 158
NFC Tag 160

■ **Bluetooth Low Energy Technology Advertising 161**

Introduction 161
Dongle specifications 161
Procedure 161
Changing the Bluetooth Low Energy Technology Advertising Packet 162

■ **Character Code Tables 173**

Product Overview

This chapter describes features and specifications of the product.

Features

Slip printing

- High throughput using bidirectional minimum distance printing.
- MICR reading function (option)
- Eight-line validation printing function (option)
- Check endorsement printing function (option)
- Check MICR reading, endorsement printing, and slip printing are performed continuously in that order.

Receipt printing

- High speed printing (500 mm/s {19.69 in/s} maximum).
- Multi-tone graphic printing.
- Bar code and two-dimensional symbol printing.
- Equipped with an autocutter.
- Paper saving function.

Handling

- Easy drop-in paper loading

Software

- TM-Intelligent function is supported.
  - Supports Server Direct Print that sends a request for print data from the product to the Web server at regular intervals.
  - Supports status notification function, which enables the printer to send its status to a web server at regular intervals.
- ESC/POS Command System.
- OPOS ADK, OPOS ADK for .NET, JavaPOS ADK, and EPSON Advanced Printer Driver (APD).
- Bar code and two-dimensional symbol printing.

Interface

- Equipped with USB and Ethernet by default.
- Either serial, or USB PlusPower can be built-in by factory option.
- Optional Wireless LAN cable set is available.

Functions

- NFC tag built into the printer unit for printing to a touched printer.
- Supports printing using multiple interfaces.
- Enables HTTPS communication.
- A maintenance counter function is supported.
- Connect the Laird Connectivity BT-820 to support iBeacon.

Others

- Small footprint and simple design.
- Direct connection of Epson customer display series (DM-D) is possible.

Product Configurations

Models

	Function		
Model Name	**MICR**	**Endorsement printer (E/P)**	**Validation**
Standard model	-	-	-
MICR model	✓	-	-
MICR/Endorsement model	✓	✓	-
MICR/Validation model	✓	-	✓

NFC Tag

You can select the printer you want to use by simply placing an NFC device over the NFC tag (mark) on the printer. There is a limit to the distance over which communication is possible. see "NFC Tag" on page 160.

NOTE

- There is no data rewriting function.

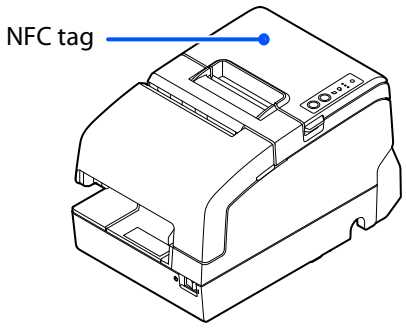

Case color

- Black (EBCK)
- White (ENN8.5)

Accessories

Included

- AC adapter *
- AC cable *
- Roll paper
- Power switch cover
- Connector cover
- Manuals

- LED information label *
- Ink ribbon cartridge ERC-32(B)
- Ink ribbon cartridge ERC-43(B) *

* May not be included depending on the model.

Options

- TA-6000II: Printer attachment.
- OT-DC6000: Cover for protecting the wireless LAN unit.
- OT-WL06: Wireless LAN cable set.
- DM-D110, DM-D210, DM-D30, DM-D70: Customer display.

Part Names and Functions

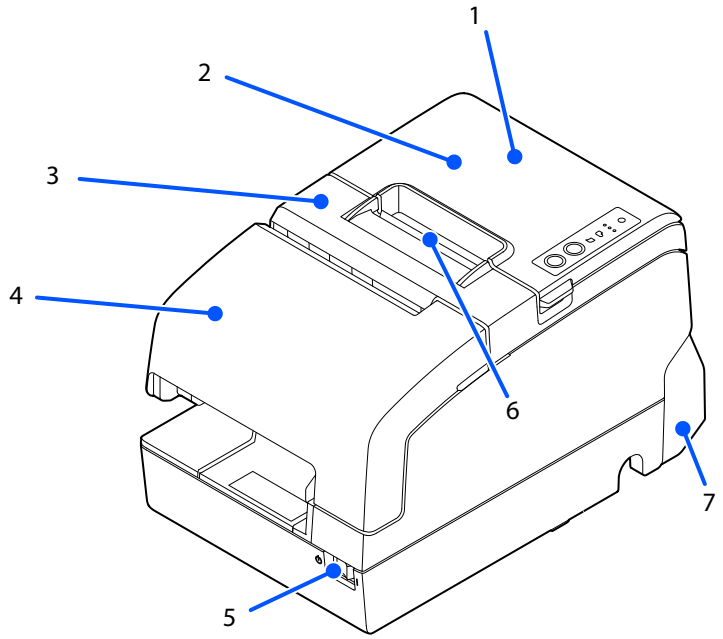

1	NFC tag*	A mark is printed here to indicate the position of the NFC tag. To establish communication with an NFC device, bring the device close to this mark. For the functions using the NFC tag, refer to "Useful Functions for Smart Devices" on page 30. * May not be equipped depending on the printer model.
2	Roll paper cover	Open this cover to install/replace the roll paper.
3	Receipt unit	Open this unit to install/replace the ribbon cartridge for endorsement printing.
4	Front cover	Open this cover to install/replace the ribbon cartridge for slip/validation printing.
5	Power switch	Use this switch to turn the printer on or off.
6	Manual cutter	Use this cutter when you tear off the roll paper manually.
7	Connector cover	Use this cover to hide and protect rear connectors and cables.

Control Panel

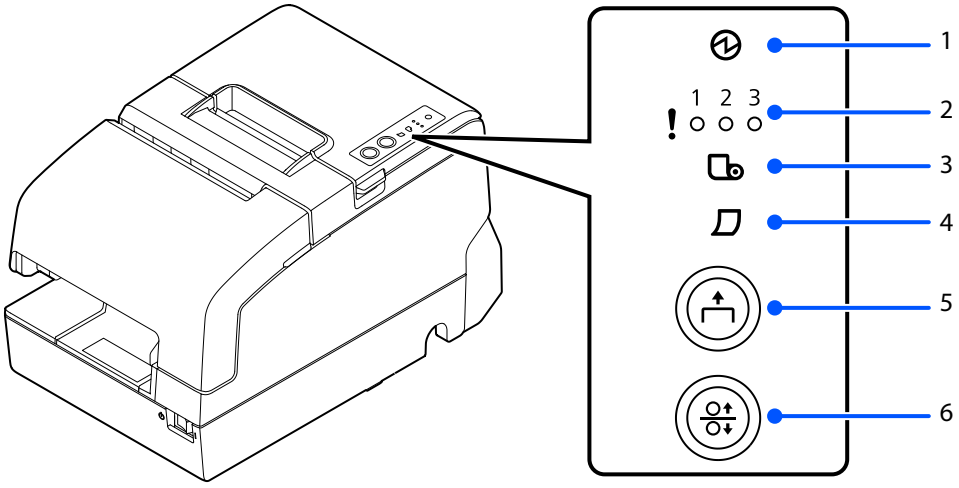

1	(Power) LED	On when the printer is on.
2	(Error) LED	The 3 LEDs indicate an error status. (See "Status and Errors" on page 21.)
3	(Paper) LED	On when the roll paper is near its end.
4	(Slip) LED	On when the printer is in slip paper mode. Off when the printer is in roll paper mode. Flashes when the printer is waiting for slip paper to be inserted/removed.
5	(Feed) button	This button feeds paper.
6	(Release) button	This button releases the retained paper.

Connectors

All connectors are located on the lower rear of the printer.

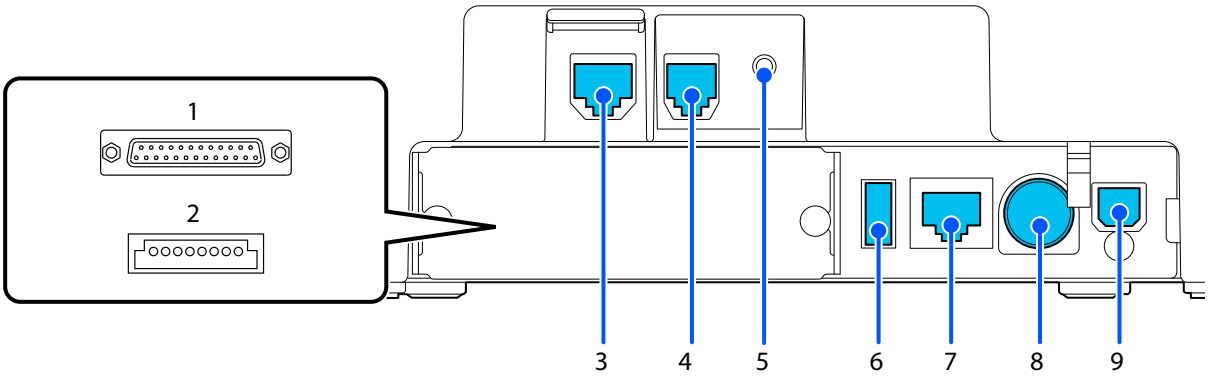

1	Serial interface connector*	For connecting a serial cable for connecting to a computer. *May not be equipped depending on the printer model.
2	USB PlusPower connector*	For connecting a USB PlusPower cable for connecting to a computer. *May not be equipped depending on the printer model.
3	DM-D connector	For connecting the customer display.
4	Drawer kick connector	For connecting a modular cable for the cash drawer.
5	Status sheet button	Use this button to print a status sheet on interfaces or initialize the settings on interfaces.
6	USB Type-A connector	For connecting a peripheral device such as a wireless LAN unit or a customer display.
7	Ethernet connector	For connecting a LAN cable. The LED on top of the connector changes depending on the Ethernet connection status. • On: Ethernet connected • Flashing: Ethernet connection in progress (IP address not yet acquired) • Off: No network connection
8	Power supply connector	For connecting the power cable.
9	USB Type-B connector*	For connecting a USB cable for connecting to a computer. *May not be equipped depending on the printer model.

CAUTION Do not insert a Type-B USB connector into the Ethernet connector, the drawer kick connector, or the DM-D connector. If it is inserted, the connector, printer, and the system may malfunction.

Online and Offline

Online

The printer is online and ready for normal printing unless there is a reason to go offline.

Offline

The printer automatically goes offline under the following conditions:

- While the printer power is turning on/off
- While a self-test is running
- While the roll paper cover, the front cover or the receipt unit is open
- While roll paper is fed using the Feed button
- When the printer stops printing due to a paper-end
  (if an empty paper supply is detected by the roll paper end sensor or if the driver has been set to stop printing when a roll paper near end is detected)
- During a macro execution standby state
- When an error has occurred

Status and Errors

The status of the printer is indicated by lit and flashing LEDs.

CAUTION

- You cannot print when an error has occurred.
- You can scan the QR code using your smart device to check detailed information about the error and the solution.

https://support.epson.net/p_doc/928/

NOTE

You cannot identify the error by the flashing patterns of the LEDs. Develop the application so that users can identify the error description and check the solutions.

LED on/flashing patterns

Mark	Status of LED
	On
	Off
	Flashing
(2)	Flashing 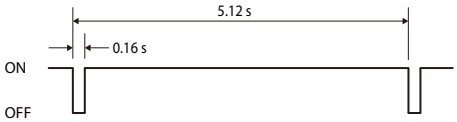
(3)	Flashing 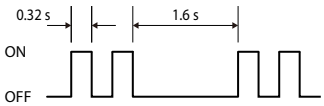
(4)	Flashing 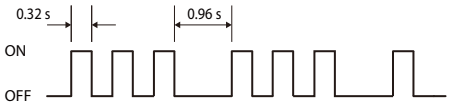
(5)	Flashing 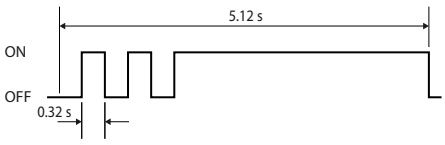
-	LED either on, off or flashing

Printer operating status

Power LED	Error LED 1	Error LED 2	Error LED 3	Paper LED	Slip LED	Status	Solution and Reference
○	○	○	○	○	○	The power is off or is not being supplied	Make sure the power supply is connected to the printer and then turn on the printer.
●	○	○	○	○	○	Online (Nomal status)	-
●	○	○	○	●	○	Roll paper near end	The roll paper will run out soon. Prepare a new roll paper.
●	●	○	○	-	-	Roll paper cover or front cover open when not printing	Make sure the roll paper cover and front cover is closed.
●	●	○	○	●	-	No paper	The roll paper has run out. Load a new roll paper.
●	○	○	○	○	●	Slip paper selection/ printing conditions	-
●	○	○	○	○	●	Slip paper insertion standby	Insert the slip paper.
●	○	○	○	○	● (3)	Slip paper removal standby	Remove the slip paper from the printer.
●	○	○	○	○	● (4)	Check insertion standby (Only MICR model)	Insert the check paper.
●	-	-	-	●	-	• Continued self-test standby • Macro execution standby • Standby for closing roll paper cover when printing status sheet	The printer is waiting for user operation. Press the Feed button or close the roll paper cover to continue the process.
● (2)	○	○	○	-	-	TM-Intelligent function warning	A connection cannot be established with the server. Check the network-related issues such as cable connections or server operation status.
●	●	○	○	○	○	Powering off	The printer is shutting down. Wait until the Power LED turns off.
●	○	●	○	○	○	Power OFF standby	The printer is ready for the power to be turned off with your system. Use the power switch to turn off the power.

Power LED	Error LED 1	Error LED 2	Error LED 3	Paper LED	Slip LED	Status	Solution and Reference
●	○	○	○	○	○	Overwriting firmware	The printer firmware overwrite process is in progress. Wait until the printer restarts. **CAUTION:** Do not turn off the power while the firmware overwrite process is in progress.

Error Status

Errors that recover automatically

Power LED	Error LED 1	Error LED 2	Error LED 3	Paper LED	Slip LED	Status	Solution and Reference
●	●	○	○	-	-	This occurs when printing on the roll paper. • Head temperature error • Motor driver IC temperature error • Paper feed motor error	The printer temporarily stops operating because the print head, roll paper feed motor, or driver IC has overheated.

Recoverable errors

Power LED	Error LED 1	Error LED 2	Error LED 3	Paper LED	Slip LED	Status	Solution and Reference
●	●	●	○	-	-	• Autocutter error • Paper jam at the paper feed motor (roll paper)	Open the roll paper cover and check for any foreign objects. Then clear the error from your system. See "Auto cutter error" on page 117. See "Roll paper is jammed" on page 120.
●	●	●	●	-	-	Roll paper cover open error (during printing)	Properly set the roll paper and then close the roll paper cover. Then clear the error from your system. See "Installing and Replacing the Roll Paper" on page 102.

Power LED	Error LED 1	Error LED 2	Error LED 3	Paper LED	Slip LED	Status	Solution and Reference
●	●	○	●	-	-	Paper jam (Slip/ Endorsement/MICR/ Validation)	Open the front cover and front carriage unit and then check for paper and any foreign objects. See "Paper jam" on page 120.
● (5)	-	-	-	-	-	The RTC (Real Time Clock) battery has run out.	Use a USB cable to connect the printer to the computer and then use the TM-H6000VI Utility to set the time. For more information about the TM-H6000VI Utility, see the TM-H6000VI Utility User's Manual.

Unrecoverable errors

If the error persists after turning the printer off and then on again, the printer may be defective. Contact qualified service personnel.

CAUTION If an unrecoverable error occurs, turn off the power immediately by using the power switch or by unplugging the DC cable or power cable.

Power LED	Error LED 1	Error LED 2	Error LED 3	Paper LED	Slip LED	Status	Error Description
⚡	⚡	○	○	⚡	⚡	R/W error in memory	Detected an error during memory R/W.
⚡	○	⚡	○	⚡	⚡	High voltage error	Detected abnormal voltage (high) in the power source.
⚡	○	○	⚡	⚡	⚡	Low voltage error	Detected abnormal voltage (low) in the power source.
⚡	⚡	⚡	○	⚡	⚡	CPU execution error	The CPU executes an incorrect address.
⚡	⚡	○	⚡	⚡	⚡	Internal circuit connection error	Detected an error in the internal circuit connection.
⚡	○	⚡	⚡	⚡	⚡	Communication unit error	Detected an error in wireless communication or the wireless unit, or detected that a non-specified device was connected to the USB Type-A connector when the power was turned on.
⚡	●	○	○	⚡	⚡	Paper feed motor error (roll paper)	Detected an error in the roll paper feed motor.

Power LED	Error LED			Paper LED	Slip LED	Status	Error Description
	1	2	3				
						Mechanical operation error	Could not detect the position of the platen roller opening/closing mechanism.

NV Memory

The printer's NV memory (Non-Volatile Memory) stores data even after the printer power is turned off. NV memory contains the following memory areas for the user:

- NV graphics memory
- User NV memory
- Memory switches
- R/E (Receipt Enhancement)
- Maintenance counter

CAUTION

NV memory can be rewritten about 100,000 times. As a guide, NV memory rewriting should be 10 times or less a day when you program applications.

NV Graphics Memory

Graphics, such as shop logos to be printed on receipts, can be stored. Even with a serial interface model whose communication speed is low, high speed graphics printing is possible.

To register your graphics data, use TM-H6000VI Utility or ESC/POS commands.

You can check registered graphics data using TM-H6000VI Utility or by printing the data in the NV graphics information print mode.

User NV Memory

You can store and read text data for multiple purposes, such as for storing a note including customizing or maintenance information of the printer.

Memory Switches (Customize Value Settings)

With the memory switches, which are software switches for the printer, you can configure various settings of the printer. For information about the memory switch, see "Software Settings" on page 66.

R/E (Receipt Enhancement)

You can set the graphics data, such as a shop logo, registered in the NV graphics memory to be printed on the top of each receipt or to be printed on the bottom of each receipt just before the paper is cut.

To make the settings, use TM-H6000VI Utility or ESC/POS commands.

You can check the settings using TM-H6000VI Utility or by printing the settings information in the Receipt enhancement information print mode.

Maintenance Counter

With this function, printer information, such as the number of lines printed, the number of autocuts, and printer operation time after the printer starts working, is automatically stored in NV memory.

NOTE

- You can also check the head running length and number of times of autocutting with the self-test (see "Self-test Mode" on page 81).
- The maintenance counter values are automatically saved in the NV memory usually every two minutes (up to four minutes). However, the values are not saved when the printer is in power-saving mode or when it is turned off without the use of the power switch.

Simple Setup for Wireless LAN

The printer has "SimpleAP" mode that allows a device to directly connect to the printer without using an access point. This makes it easy to set up a printer to connect to a wireless LAN using the printer setting tool, without having to go through a network environment such as an access point.

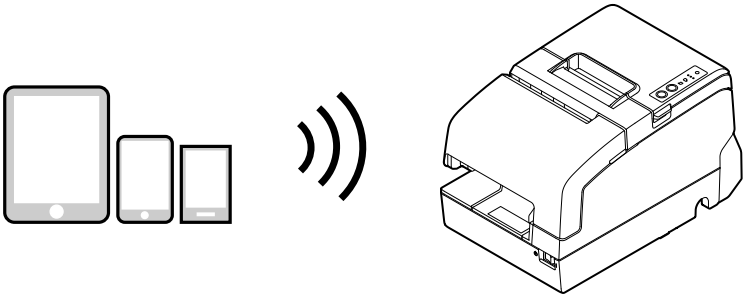

When all of the following conditions are met and the printer is turned on, SimpleAP will start automatically. After startup, a "SimpleAP Start" sheet will be printed.

- No USB cable is connected
- No LAN cable is connected
- SSID and passphrase are not set

"SimpleAP Start" sheet

```
SimpleAP Start

SSID : DIRECT-TM-H6000VI-XXXXXXXXXX
IP Address : 172.16.10.1
MAC Address : XX-XX-XX-XX-XX-XX

To configure this printer's Wi-Fi
connection, please follow one of the
below methods:

1. Using your device's web browser:
  * Use your device's camera to scan
    the avobe QR code.
 :
 :
```

Even if you are using the optional wireless LAN unit, the "SimpleAP Start" sheet described above will be printed when SimpleAP automatically starts up when the printer is turned on.

If SimpleAP does not start automatically (the "SimpleAP Start" sheet is not printed), start SimpleAP from the menu that can be selected after printing the status sheet guidance ("Setup using Web Config" on page 40).

If you have changed the wireless LAN connection settings from the default settings for your environment and devices, start according to those settings and connect to the access point.

About SimpleAP

- Use SimpleAP to change the printer's wireless LAN connection settings.
- The printer acts as an access point in the SimpleAP mode and allows up to eight devices to connect to the printer. However, devices directly connected to the printer cannot communicate with each other through the printer.
- Do not use 172.16.x.x for the IP address of the wireless LAN and wired LAN because the default IP address of SimpleAP is 172.16.10.1. If used, SimpleAP will be stopped to avoid IP address conflicts.
  If SimpleAP is restarted in the above state, the initial IP address of SimpleAP will be changed to 192.168.223.1 to avoid IP address conflicts.
- Even if you have not changed your passphrase, you may be prompted to enter your passphrase.
  For information about the default passphrase, see "Default Password for Setup / Default Passphrase for SimpleAP" on page 157.
- If SimpleAP is started when the printer is connected via wireless LAN, the wireless LAN connection is temporarily disconnected.

About Wi-Fi Direct

- Use Wi-Fi Direct to connect the host and printer directly over a wireless LAN for printing without using an access point.
- The printer acts as an access point in the Wi-Fi Direct and allows up to eight devices to connect to the printer. However, devices directly connected to the printer cannot communicate with each other through the printer.
- The printer can be connected to Wi-Fi Direct and a wireless LAN or a wired LAN at the same time.
- Wi-Fi Direct settings can be checked or changed using Web Config or TM-H6000VI Utility. For details, check the Web Config Reference Guide or the TM-H6000VI Utility User's Manual.

Useful Functions for Smart Devices

You can easily connect this product to the network by using the NFC tag built-in to the printer or the QR code printed on the status sheet.

NFC Tag

Bring a smart device that supports NFC close to the NFC tag to acquire the printer information (information for specifying the device).

By using the acquired information, the device can specify the printer to send a print job over a network.

QR Code

Capture the QR code printed on the status sheet with the camera on your smart device to acquire the printer information (information for specifying the device).

By using the acquired information, the device can specify the printer to send a print job over a network.

Printing Using Multiple Interfaces

In printers with multiple interfaces, you can use all interfaces without any limitations on which interface is to be used. You can use this function to temporarily connect a smart device to a nearby printer and print.

The printer provides each interface with an independent receive buffer and switches the active interface depending on the priority, while handling data in each receive buffer.

You can set one interface for the main connection. Data received from the main connection interface is handled with the highest priority.
By default, the interface that receives the first data transfer is set as the main connection interface; however, you can select the main connection interface in advance.

When the receive buffer for the active interface becomes empty and a preset time period has passed, switching to another interface is enabled, and an interface that receives print data becomes active.

CAUTION	You cannot use wired and wireless LANs at the same time. When a LAN cable is connected, wireless LAN is disabled.

NOTE	You can select the main connection interface and set the time to enable interface switching from the software settings. For details on software settings, see "Software Settings" on page 66. When the MICR/Slip/Endorse station is selected, interrupts from other interfaces cannot be performed.

Setup

This chapter describes setup and installation of the product and peripherals.

Flow of Setup

This chapter consists of the following sections along with the setup flow of the product and peripherals.

1. Removing the Protective Materials and Tape (page 33)

↓

2. Connecting the AC adapter (page 34)

↓

3. Connecting the Printer to the Host (page 36)

↓

4. Connecting the Cash Drawer (page 44)

↓

5. Connecting the Optional Customer Display (page 46)

↓

6. Attaching and Removing the Connector Cover (page 47)

↓

7. Installing and Replacing the Ribbon Cartridge (ERC-32) (page 48)

↓

8. Installing and Replacing the Ribbon Cartridge for Endorsement Printing (ERC-43) (page 50)

↓

9. Installing the Roll Paper (page 53)

↓

10. Test Printing (page 55)

↓

11. Attaching the Power Switch Cover (page 57)

↓

12. Applying the LED Information Label (page 58)

↓

13. RTC Settings (page 60)

↓

14. Adjusting the Paper Roll Near-End Sensor (page 61)

Removing the Protective Materials and Tape

Protective materials and tape are applied for protection against impacts during transportation. Remove all of them, from A to K.

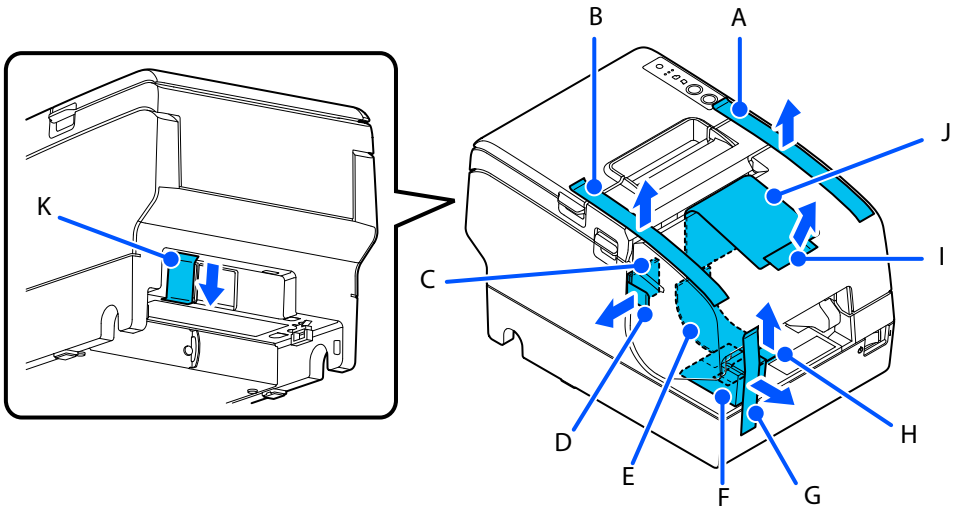

To remove protective material J, you must open the receipt unit.

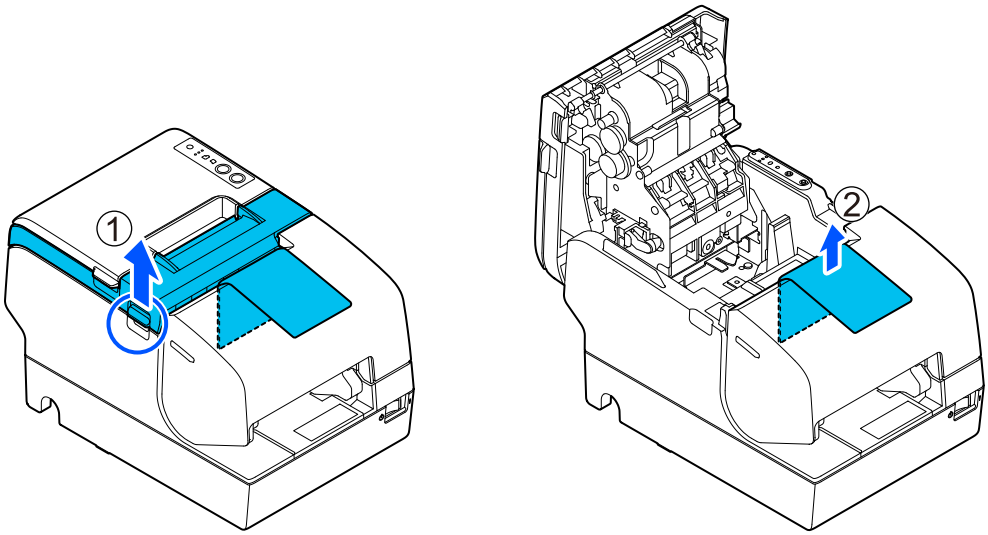

Connecting the AC adapter

Use the Epson PS-190 or an equivalent product as the AC adapter.

WARNING

- **Never insert the AC cable plug into a socket that does not meet the input voltage of the AC adapter.**
  Doing so may result in damage to the printer.
- **Should a fault ever occur, immediately turn off the power to the printer and unplug the AC cable from the socket.**

CAUTION

When using USB PlusPower interface, be careful of the following points. The printer may malfunction.

- Do not connect an AC adapter.
- Do not remove or insert the USB PlusPower cable while the printer is still on.

Connecting the AC adapter

1 **Make sure the power switch is off.**

2 **Connect each interface cable to the printer. When using the USB interface, fix the USB cable with the locking wire saddle to prevent the USB cable from coming off.**

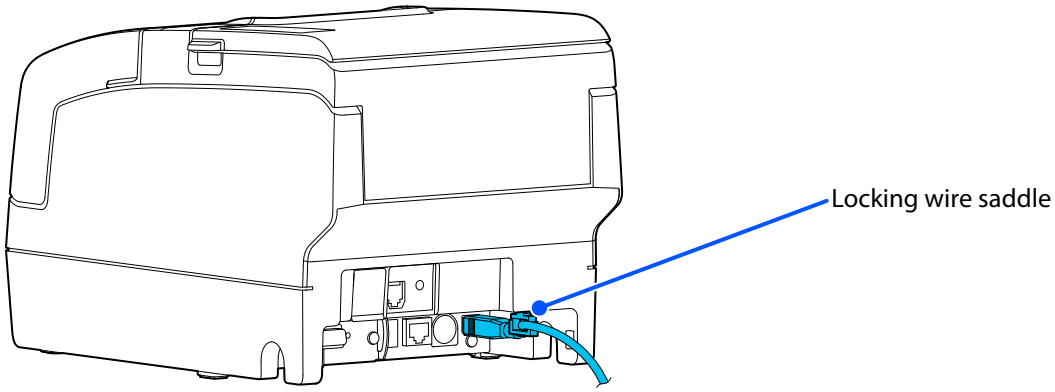

3 **Connect the interface cable to the computer.**

4 **Connect the AC cable connector to the AC port of the AC adapter.**

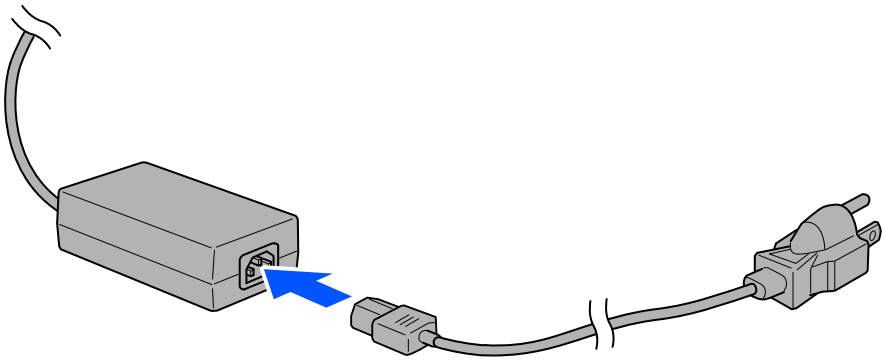

5 Connect the DC cable to the printer.

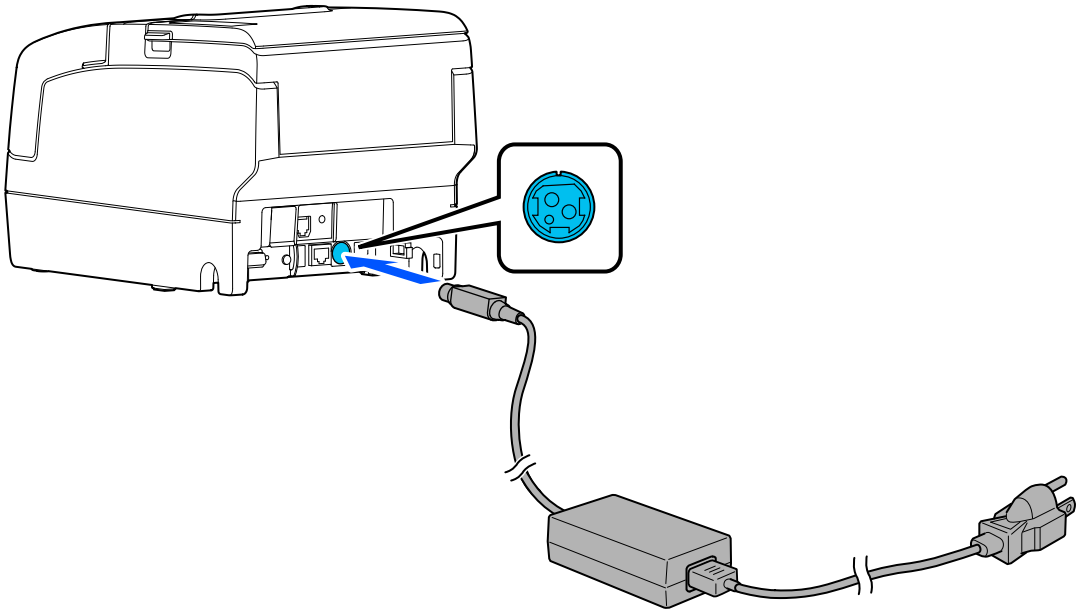

6 Insert the AC cable plug into a power outlet.

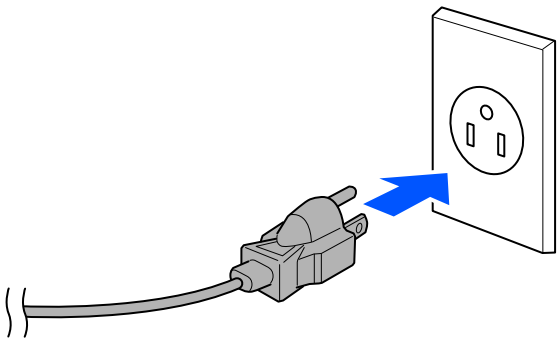

7 Set the AC adapter so that its label side is facing down.

Connecting the Printer to the Host

CAUTION

- Be sure to install the driver before connecting the printer to the host computer.
- The printer uses modular connectors specifically designed for the cash drawer. Do not connect these connectors to an ordinary telephone line.

USB Type-B Interface

When using USB cable to connect with host device, connect the USB cable to the printer, and after starting the host device, turn the printer on.

When using the USB interface, fix the USB cable with the locking wire saddle to prevent the USB cable from coming off.

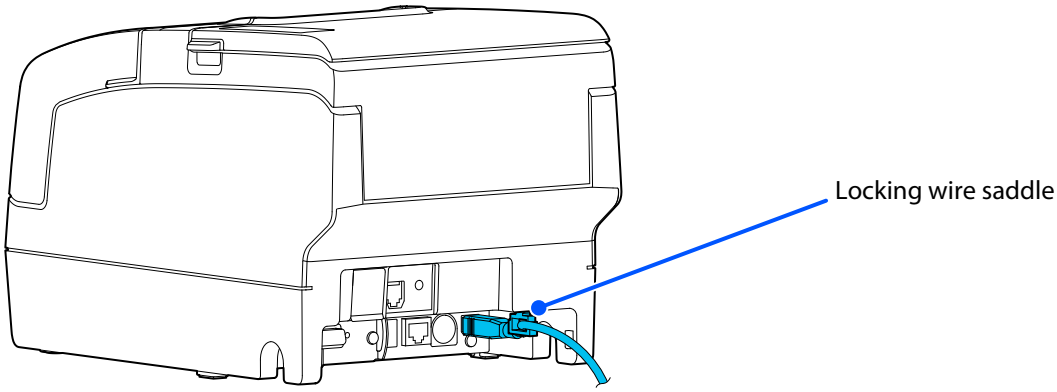

CAUTION

- Do not place any weight or stress on the cable when using. Doing so could damage the cable and connectors.
- Use a USB cable that complies with the USB 2.0 standard. Using a non-compliant cable may cause the printer to malfunction due to static electricity.

Ethernet Interface

Use LAN cable to connect the printer to the network via a hub.

Use Web Config or TM-H6000VI Utility to set network.

CAUTION

- When LAN cables are installed outdoors, make sure they are connected through devices that have surge protection.
  Otherwise, the devices can be damaged by lightning.
- Never attempt to connect the drawer kick cable or a standard telephone line cable to the LAN connector.
- Do not insert the Ethernet cable into the DM-D connector.

Setting up using Web Config

Open the web application installed in the printer from a web browser to configure the settings.

Since you need to enter the IP address of the printer to open the web application, set the network segment of your computer to the same as the printer.

For more details about Web Config, see "Web Config" on page 95.

Setup Process

1. Print the status sheet (check the current settings)
2. Change the network settings of the computer (set its network segment to the same as the printer)
3. Configure the settings using Web Config

Setup Procedure

Follow the steps below to set up the printer.

> **CAUTION**
> When shipped from the factory, the setting for obtaining an IP address is set to "Auto", so if there is a DHCP server, the printer waits for an IP address to be assigned. If there is no DHCP server, a fixed IP address (192.168.192.168) is set. In either case, the determined IP address will be printed automatically.

1 **Connect the computer and the printer to the same network.**

2 **Print the status sheet and check the current settings.**

For instructions on how to print the status sheet, see "Printing a Status Sheet" on page 90.

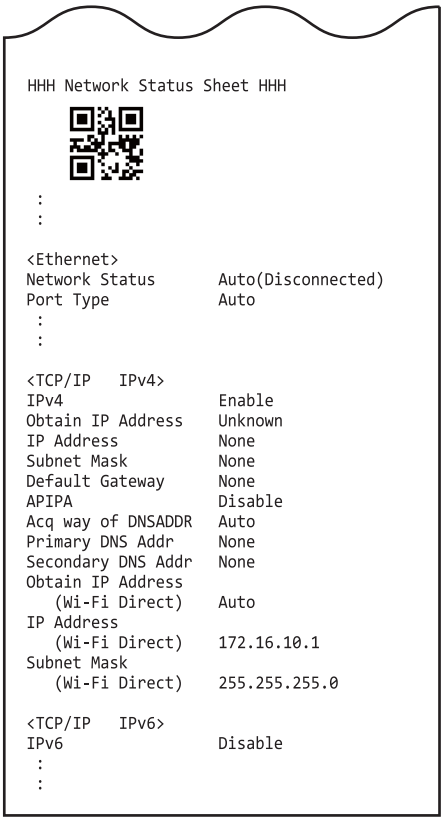

```
HHH Network Status Sheet HHH

 :
 :

<Ethernet>
Network Status        Auto(Disconnected)
Port Type             Auto
 :
 :

<TCP/IP   IPv4>
IPv4                  Enable
Obtain IP Address     Unknown
IP Address            None
Subnet Mask           None
Default Gateway       None
APIPA                 Disable
Acq way of DNSADDR    Auto
Primary DNS Addr      None
Secondary DNS Addr    None
Obtain IP Address
   (Wi-Fi Direct)     Auto
IP Address
   (Wi-Fi Direct)     172.16.10.1
Subnet Mask
   (Wi-Fi Direct)     255.255.255.0

<TCP/IP   IPv6>
IPv6                  Disable
 :
 :
```

3 **Change the network settings of the computer so that the network segment is the same as the IP address of the printer you checked in step 2.**

Subnet mask: Same subnet mask as the printer

IP address: Same segment as the printer (same network address), different host address

Example

	Printer	Computer
Subnet mask	255.255.255.0	255.255.255.0
IP address	192.168.192.168	192.168.192.2

4 **Start your web browser and enter the IP address of the printer in the address field.**

Example: http://192.168.192.168

> NOTE
> At the time of initial setting, when accessing Web Config from a browser, an authentication warning message may be displayed.

5 **Select "Advanced Settings" to log in to Web Config.**

For information about the default password, see "Default Password for Setup / Default Passphrase for SimpleAP" on page 157.

6 **Select the Network tab, and change the settings based on information obtained from your network administrator.**

7 **Click [Refresh] to send the changes to the printer.**

> NOTE
> Depending on the items you have changed, such as an IP address, the connection to the computer will be disconnected and the Web Config screen will not be displayed. To reconnect from the computer, change its network settings so that the network segment is the same as the printer.

Setting up using TM-H6000VI Utility

Refer to TM-H6000VI Utility User's Manual.

Wireless LAN Interface

There are the following two methods to configure the wireless LAN settings.

If you are using an iOS or Android device, use Method 1.

If you are using a Windows device, use either Method 1 or Method 2.

Method1: Setup using Web Config

Connect the device and printer via SimpleAP and configure the wireless LAN settings using Web Config, a network configuration tool.

Web Config is a printer built-in web page that allows you to check and change printer settings in a browser. The printer can be easily set up from a smart device such as a tablet/smart phone or a computer.

"Setup using Web Config" on page 40

Method2: Setup using TM-H6000VI Utility

Refer to TM-H6000VI Utility User's Manual.

CAUTION

- When using wireless LAN, make sure you disconnect the LAN cable. If a LAN cable is connected, wireless LAN is disabled.
- When you set up the access point at the same time, configure the access point in advance and check that it operates correctly.
- Examine the radio wave situation in the surrounding area before use.
- Avoid using the same channel that is used in the neighboring shops where Wireless LAN is used.
- When using the product in an environment with devices that generate radio interference, such as a microwave oven in the kitchen, please take the following points into consideration.
  - * Install the printer as far away as possible from devices that cause radio interference.
  - * Use channels that are away from frequency bands that cause radio interference.
  - * Install shielding plates between the printer and devices that generate radio wave interference.
  - * Use either 2.4 GHz or 5 GHz, whichever is free from radio wave interference.
  - * In auto channel setting for the access point, do not select a channel in which the devices may cause radio wave interference.

Setup using Web Config

Necessary Items

Prepare the following items.

A device for the setup which has a web browser.

When the printer is turned on during the following conditions, the SimpleAP mode is automatically activated and the "SimpleAP Start" sheet and guidance are printed. In this case, start the setup from step 4.

- No USB cable is connected
- No LAN cable is connected
- SSID and passphrase are not set

Setup Procedure

1 **Open the roll paper cover of the printer, and then hold down the Feed button until the paper LED starts flashing, then release the button.**

2 **Close the roll paper cover.**

A guidance that starts with "Next Action" will be printed.

3 **Press the Feed button five times briefly (less than one second each), then press and hold the button for more than one second.**

"SimpleAP was selected. Release the Feed button." guidance will be printed, followed by a "SimpleAP Start" sheet.

4 Scan the QR code on the "SimpleAP Start" sheet with the device for setup and connect it to the printer.

If the device cannot scan the QR code, open the Wi-Fi settings screen of the device, select the SSID printed on the "SimpleAP Start" sheet, and enter the password to connect. For information about the default password, see "Default Password for Setup / Default Passphrase for SimpleAP" on page 157.

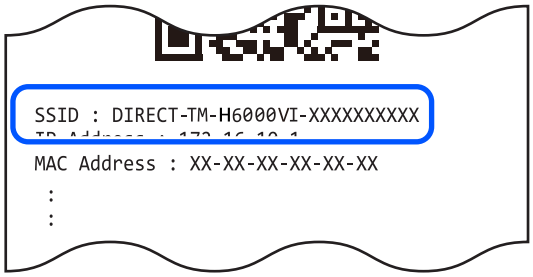

Once connected to the printer, guidance will be printed to start Web Config.

Depending on the device you are using, Web Config will start automatically.

5 If Web Config does not start automatically after connecting to the printer, scan the QR code in the guidance that says "WebConfig Start" at the beginning.

If the device cannot scan the QR code, start the device's web browser and enter the IP address of the printer in the address field.
The IP address is written on the "SimpleAP Start" sheet.

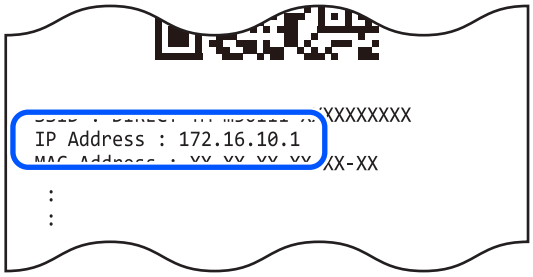

6 When the Web Config screen opens, select the "Wi-Fi" menu.

7 **Enter the password and select [OK] to log in to Web Config.**

For information about the default password, see "Default Password for Setup / Default Passphrase for SimpleAP" on page 157.

8 **From the list of SSIDs displayed, select the SSID of the network you want to connect to and select [OK] .**

9 **Enter your network password and select [OK].**

Connecting the Optional Wireless LAN Unit

With the optional wireless LAN unit, the printer can be used with a Wi-Fi connection.

The setting can be changed using TM-H6000VI Utility, or in the software setting mode. See "Software Settings" on page 66 for more details.

CAUTION	Depending on the installation conditions of the printer and the routing for cables connected to it, the status of the radio waves for the Wireless LAN unit may decline. If this does happen, use an extension cable.

1 **Make sure the printer is turned off.**

2 **Connect the optional wireless LAN unit to the USB Type-A connector on the printer.**

For details on how to connect the unit, refer to the user's manual of the wireless LAN unit.

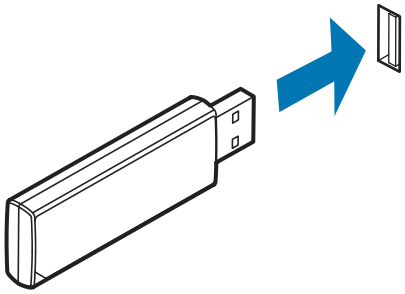

Serial Interface

When connecting to the host computer through a serial interface (RS-232), connect a serial cable to the printer, start the host computer, and then turn on the printer.

NOTE	• When using connectors equipped with screws, tighten the screws on both sides to secure the connectors firmly. • When using interface cables equipped with a ground line, attach the ground line to the screw hole marked "FG" on the printer.

USB PlusPower Interface

When using a USB PlusPower cable to connect with the host device, connect the flat connector of the USB PlusPower cable to the printer, and the square connector to the device. After starting the host device, turn the printer on.

CAUTION

When using USB PlusPower Interface, be careful of the following points.

- Do not connect an AC adapter and USB Type-B simultaneously.
- Do not remove or insert the USB PlusPower cable while the printer is still on.

Connecting the Cash Drawer

CAUTION
- Two driver transistors cannot be energized simultaneously.
- Leave intervals longer than 4 times the drawer driving pulse when sending it continuously.

Required specifications of cash drawer

Specifications of drawers differ depending on manufacturer and/or model. When you use a drawer other than specified, make sure its specification meets the following conditions.

Otherwise, devices may be damaged.

- The load, such as a drawer kick solenoid, must be connected between pins 4 and 2 or pins 4 and 5 of the drawer kick connector.
- When the drawer open/close signal is used, a switch must be provided between drawer kick connector pins 3 and 6.
- The resistance of the load, such as a drawer kick solenoid, must be 24 Ω or more or the input current must be 1A or less.
- Be sure to use the 24V power output on drawer kick connector pin 4 for driving the equipment.

Drawer Connection Diagram

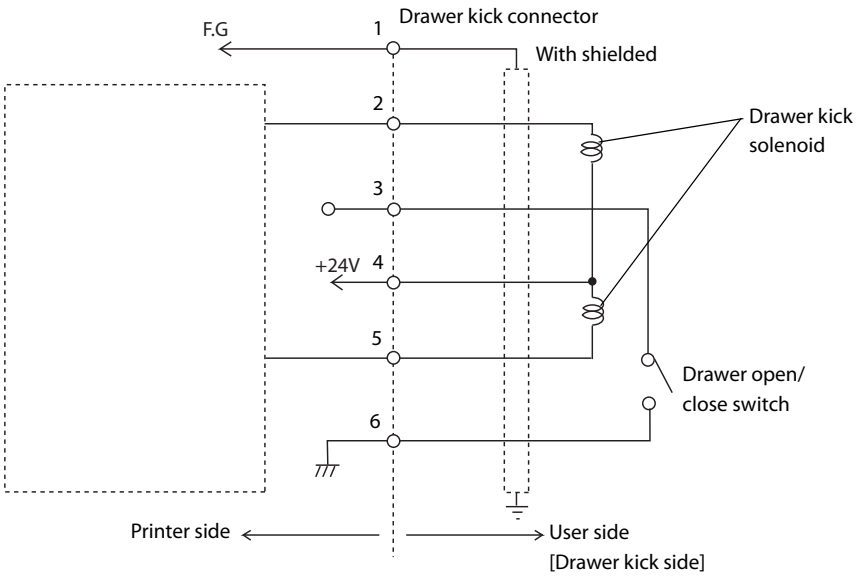

Adaptable Connector

RJ12 modular connector

Pin assignments

Pin number	Signal name	Direction
1	Frame GND	-
2	Drawer kick drive signal 1	Output
3	Drawer kick open/close signal	Input
4	+24 V	-
5	Drawer kick drive signal 2	Output
6	Signal GND	-

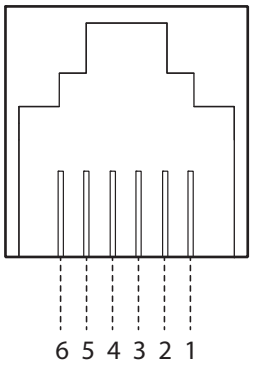

Connecting the drawer kick cable

WARNING

- **Use a shield cable for the drawer kick cable.**
- **When using cash drawer, make sure to use the power supply for printer (connector pins 4).**
- **Do not insert a telephone line into the drawer kick connector.**
  Doing so may damage the telephone line or printer.

Connect the drawer kick cable to the drawer kick connector by pressing firmly until the connector clicks into place.

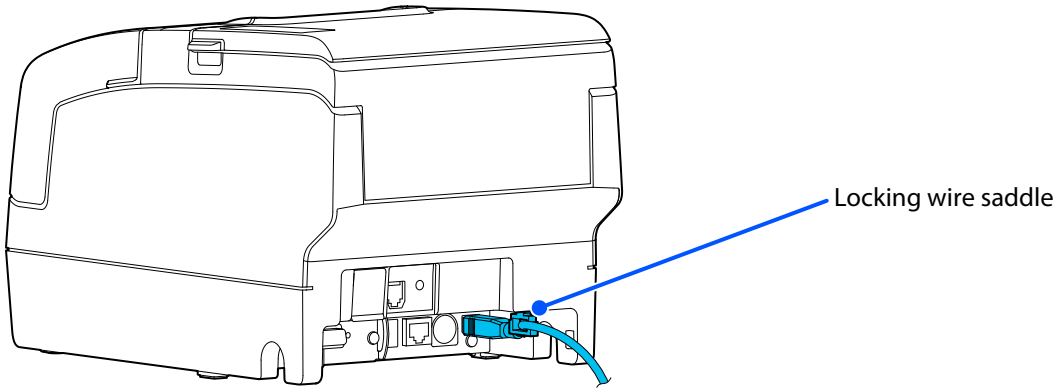

Connecting the Optional Customer Display

NOTE

- This product cannot be connected to a USB-connected customer display and serial-connected customer display at the same time.
- Dip Switch 2-2 can be toggled to connect to the customer display via USB or serial.
- The customer display setting by Dip Switch 2-2 will be indicated when the printer is turned on. Restart the printer if you have changed the settings.

DM-D30/DM-D70

You can connect the customer display (DM-D30/DM-D70) to this product, using USB connection.

For more information, refer to the user's manual for the customer display.

1 **Make sure the printer is turned off.**

2 **Set DIP switch 2-2 on the printer to OFF. See "Setting the DIP Switches" on page 62.**

3 **Connect the USB cable from the customer display to the USB Type-A connector on the printer.**

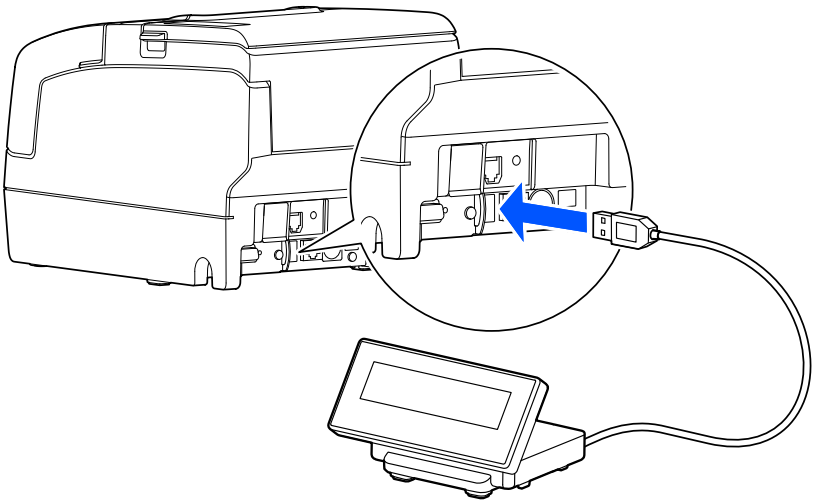

NOTE

If you want to use both the customer display (DM-D30) and the wireless LAN unit, you can connect the wireless LAN unit to the customer display. For more details, refer to the user's manual of the customer display.

DM-D110/DM-D210

When connecting a customer display, set DIP switch 2-2 on the printer to ON.

See "Setting the DIP Switches" on page 62.

For details, refer to DM-D110/DM-D210 Technical Reference Guide.

NOTE

The printer uses modular connectors specifically designed for the cash drawer. Do not connect these connectors to an ordinary telephone line.

Attaching and Removing the Connector Cover

Follow the steps below to attach the connector cover to protect cables.

1 **Align the 2 protrusions on the top of the connector cover with the holes in the back of the printer.**

2 **Push the connector cover forward so that the protrusions at the bottom of the printer fit properly in the holes in both sides of the connector cover.**

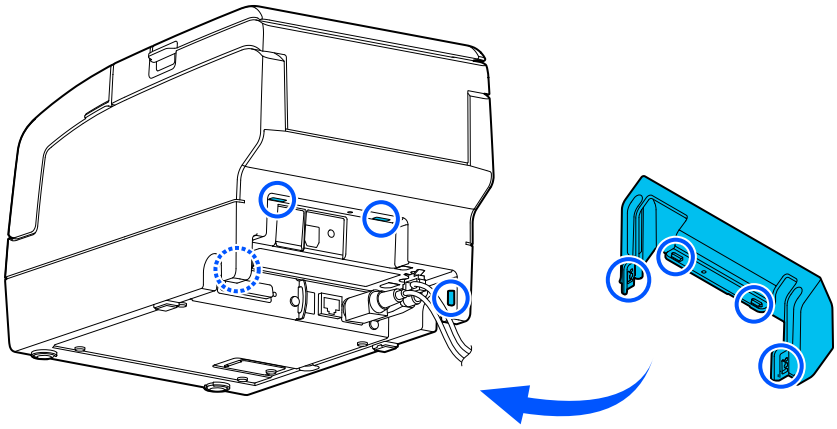

To remove the connector cover, push both sides of the cover inward to remove the holes in both sides of the cover from the protrusions at the bottom of the printer.

Installing and Replacing the Ribbon Cartridge (ERC-32)

NOTE

Be sure to use the specified ribbon cassette. (see "Product Specifications" on page 133)

1 **Turn the knob on the ribbon cartridge a little in the direction of the arrow marked on the cartridge to remove any slack in the ribbon.**

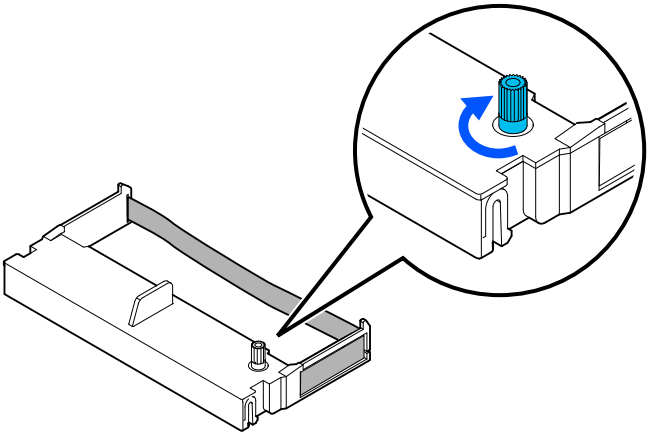

CAUTION

Make sure to note the direction of the arrow marked on the ribbon cartridge when turning the knob. Turning it in the reverse direction may damage the cartridge.

2 **Turn on the printer.**

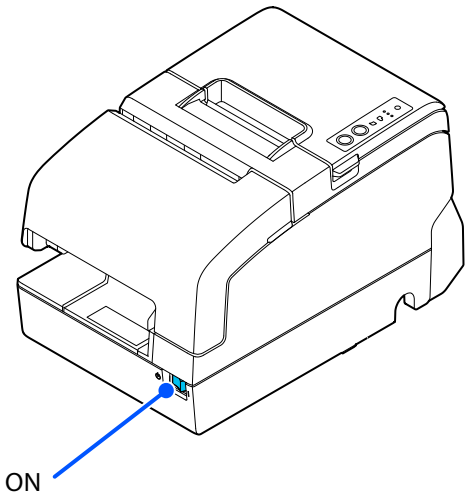

3 Open the front cover.

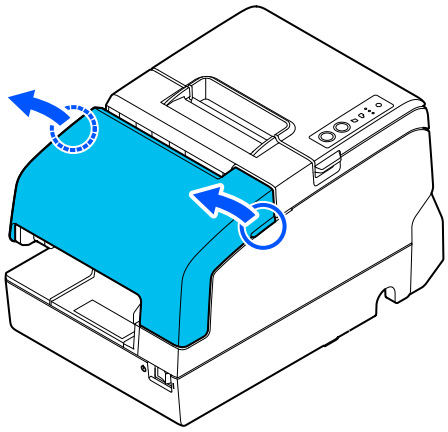

4 Remove the used ribbon cartridge, if there is one.

5 Insert a new ribbon cartridge until it clicks into place.

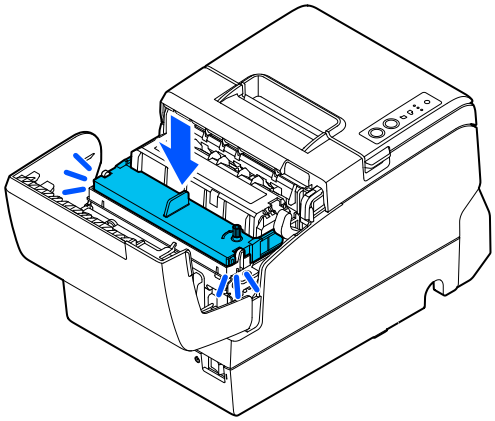

6 Turn the knob on the cartridge in the marked direction again to remove any slack in the ribbon.

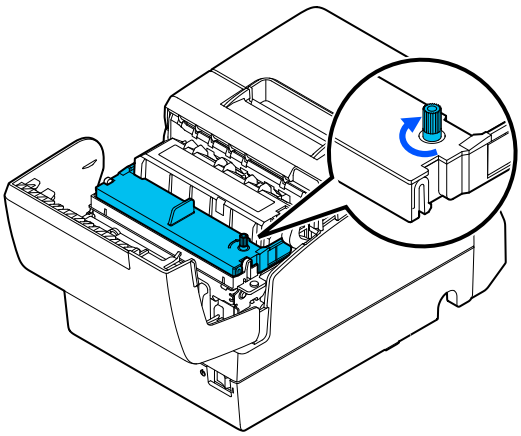

7 Close the front cover.

Installing and Replacing the Ribbon Cartridge for Endorsement Printing (ERC-43)

If your printer is equipped with an endorsement printer, endorsement printing on slip paper is available. Follow the steps below to install/replace the ribbon cartridge for the endorsement printer.

NOTE

Be sure to use the specified ribbon cassette. (see "Product Specifications" on page 133)

1 **Turn the knob on the ribbon cartridge a little in the direction of the arrow marked on the cartridge to remove any slack in the ribbon.**

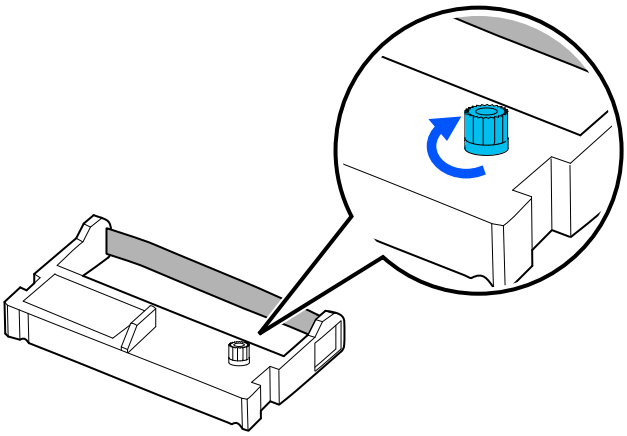

CAUTION

Make sure to note the direction of the arrow marked on the ribbon cartridge when turning the knob. Turning it in the reverse direction may damage the cartridge.

2 **Turn on the printer.**

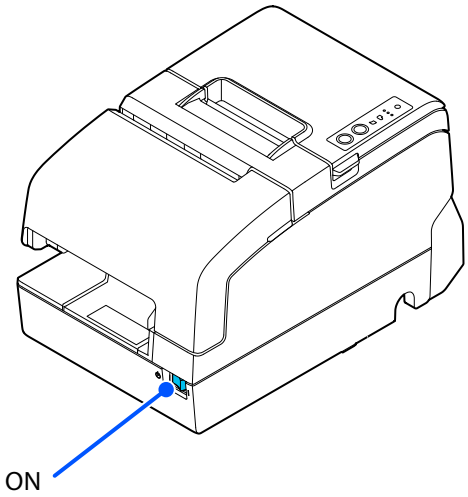

3 **Open the receipt unit.**

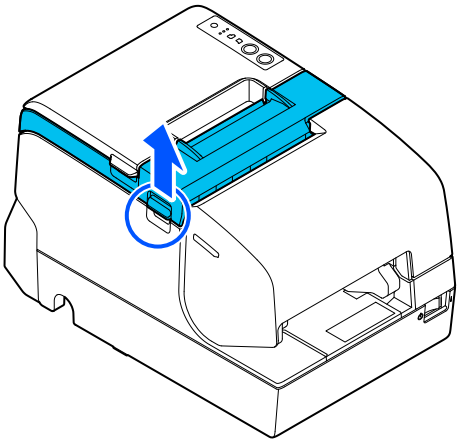

4 **Remove the used ribbon cartridge, if there is one.**

5 **Insert a new ribbon cartridge until it clicks into place.**

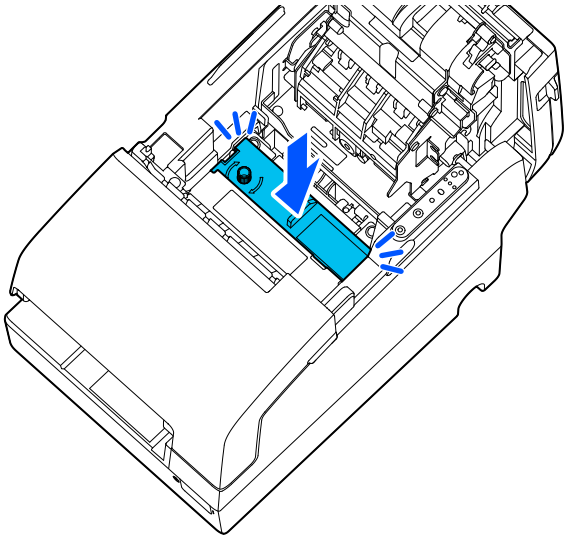

6 **Turn the knob on the cartridge in the marked direction again to remove any slack in the ribbon.**

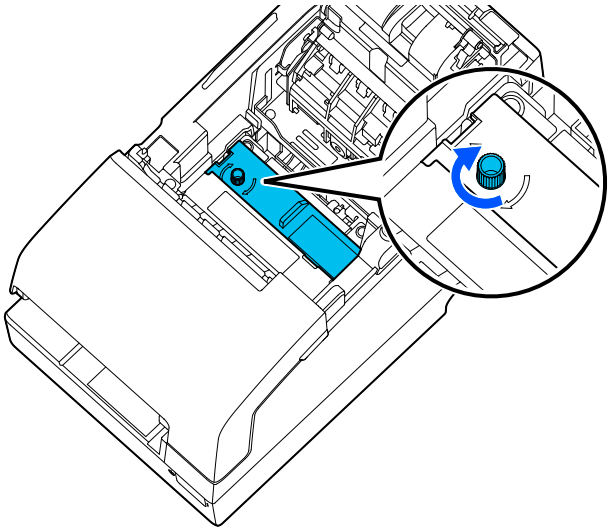

7 **Close the receipt unit.**

Installing the Roll Paper

NOTE

Be sure to use the certified paper.

Follow the steps below to install the roll paper.

1 **Make sure the printer is turned on.**

2 **Open the roll paper cover.**

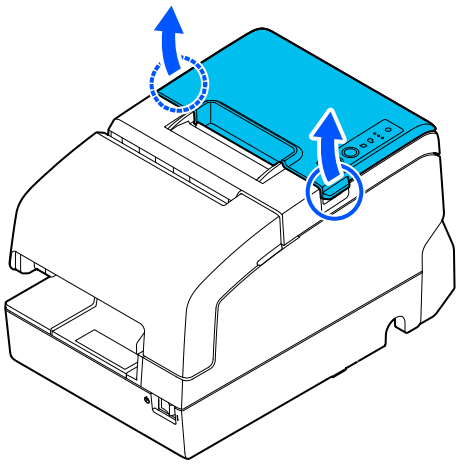

3 **Insert the roll paper in the correct direction.**

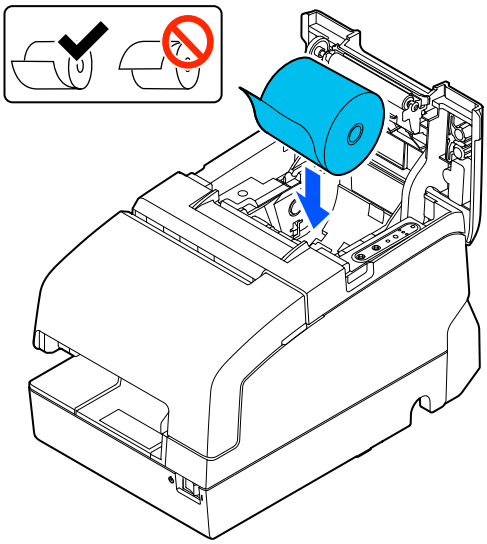

4 **Pull out some paper, and close the roll paper cover.**

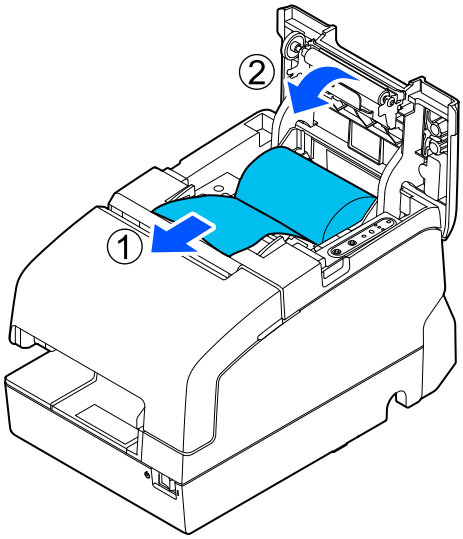

5 **Tear off the paper with the manual cutter.**

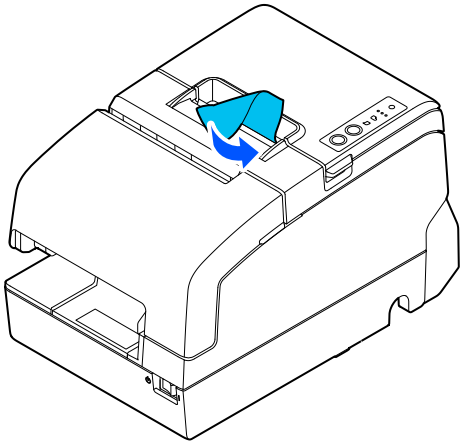

Test Printing

After the printer setup or when the printer is not operating correctly, you can check the printer operation with test printing. If the printer performs pattern printing following the steps below, the printer is operating normally.

Test Printing on Roll Paper

1. **Make sure all the covers are closed.**

2. **While pressing the (Feed) button, turn on the printer. (Hold down the (Feed) button until printing starts.)**
   After printing the current print status, a Continuing self-test guidance is printed, and the (Power) LED flashes.

3. **Briefly press the (Feed) button (less than one second) to continue the self-test.**
   The printer prints a rolling pattern on the roll paper, using the built-in character set.
   After "* completed ***" is printed, the printer initializes and switches to standard mode.**

Test Printing on Slip Paper

1. **Insert the roll paper and close all the covers.**

2. **While pressing the (Release) button, turn on the printer.**
   (Press and hold the (Release) button until the (Slip) LED flashes.)

3. **After the (Slip) LED flashes, insert the slip paper. The printer prints a rolling pattern on the slip paper, using the built-in character set.**
   Once printing is completed, the paper is ejected. If your printer is equipped with an endorsement printer, the printing is done on the slip after the endorsement side.

4. **Once you remove the slip paper, the printer initializes and switches to standard mode.**

Test Printing on Validation Paper

1 **Insert the roll paper and close all the covers.**

2 **While pressing the (Feed) and (Release) buttons, turn on the printer.**
(Press and hold the (Feed) and (Release) buttons until the (Slip) LED flashes.)

3 **After the (Slip) LED flashes, insert the slip paper.**
The printer prints a rolling pattern on the slip paper, using the built-in character set.
Once printing is completed, the paper is ejected.

4 **Once you remove the slip paper, the printer initializes and switches to standard mode.**

Attaching the Power Switch Cover

By attaching the power switch cover, you can prevent accidental operations of the power switch.

You can turn on and off the power switch by inserting a pointed object in the holes on the power switch cover. To detach the cover, use a pointed object.

To use this cover, install it as shown in the illustration below.

NOTE	Some printer models may already have a power switch cover installed.

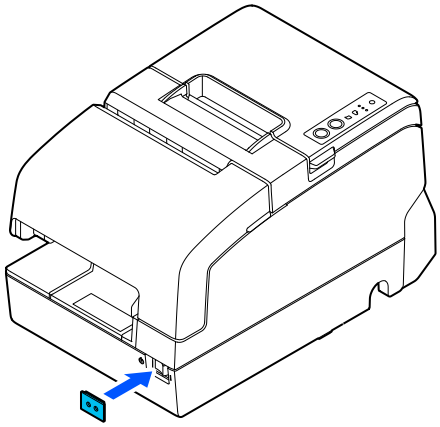

WARNING	If an accident occurs with the power switch cover attached, unplug the power cord immediately. Continued use may cause a fire or electric shock.

Applying the LED Information Label

You can use the LED information label to swiftly learn the status of the printer when an error occurs. Check the printer's LED on/flashing pattern and identify the error type from the LED information label.

Or, you can scan the QR code using your smart device to check detailed information about the error and the solution.

We recommend applying the LED information label on the reverse side of the front cover following the steps below.

NOTE

- Depending on your printer model, the LED information label may already be applied.
- The included labels vary depending on the printer model.

Error Legend

https://support.epson.net/p_doc/928/

Power	! Error 1	! Error 2	! Error 3	Paper	Slip	Status
●	●	○	○	–	–	Cover is open / Roll paper out
●	○	○	○	–	❦	Insert or remove slip*
●	●	●	○	–	–	Auto cutter error
●	●	○	●	–	–	Paper jam
●	●	●	●	–	–	Printing stop by cover open
❦	–	–	–	❦	❦	Call for service

○:off ●:on ❦:flashing –:LED either on, off or flashing
*All of the covers are closed

1 Open the front cover.

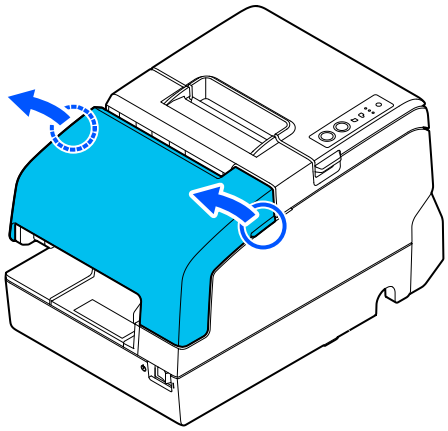

2 **Apply the LED information label in the position in the figure below.**

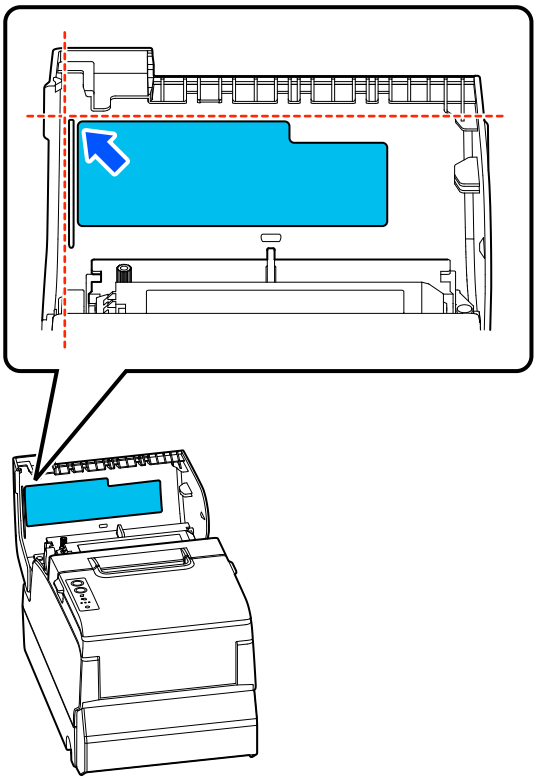

RTC Settings

The time for the RTC (Real Time Clock) may be initialized when starting up for the first time. If the printer is not connected to the power supply for a long period of time, the RTC may run out of charge and require reconfiguration. If the time is initialized, make settings using the Setup Utilities.

For details on making settings using the Setup Utilities, see the TM-H6000VI Utility User's Manual.

Adjusting the Paper Roll Near-End Sensor

Below are two situations where a roll paper NE sensor adjustment is required.

- To adjust the detection position to suit the diameter of the roll paper core used.
- To adjust the detection position of remaining amount of paper.

CAUTION

- Since roll paper cores vary slightly in shape, depending on paper roll design and manufacturing tolerances, it is impossible to detect the remaining paper exactly.
- Use roll paper with a core inner diameter of 12 mm {0.47 in} and outer diameter of 18 mm {0.71 in} so that the NE sensor can detect the remaining paper as accurately as possible.

Follow the steps below to adjust the roll paper near-end detector.

1 **Open the roll paper cover, and remove the roll paper.**

2 **Loosen the adjustment screw fastening the sensor, and align the upper edge of the positioning plate with the adjustment position.**

Adjustment position	Remaining amount of paper (Outer diameter: mm)
Upper	Approximately. 27 {1.06 in}
Lower (Default setting)	Approximately. 23 {0.97 in}

3 **Tighten the adjustment screw.**

4 **After adjustment, make sure that the detection lever operates smoothly.**

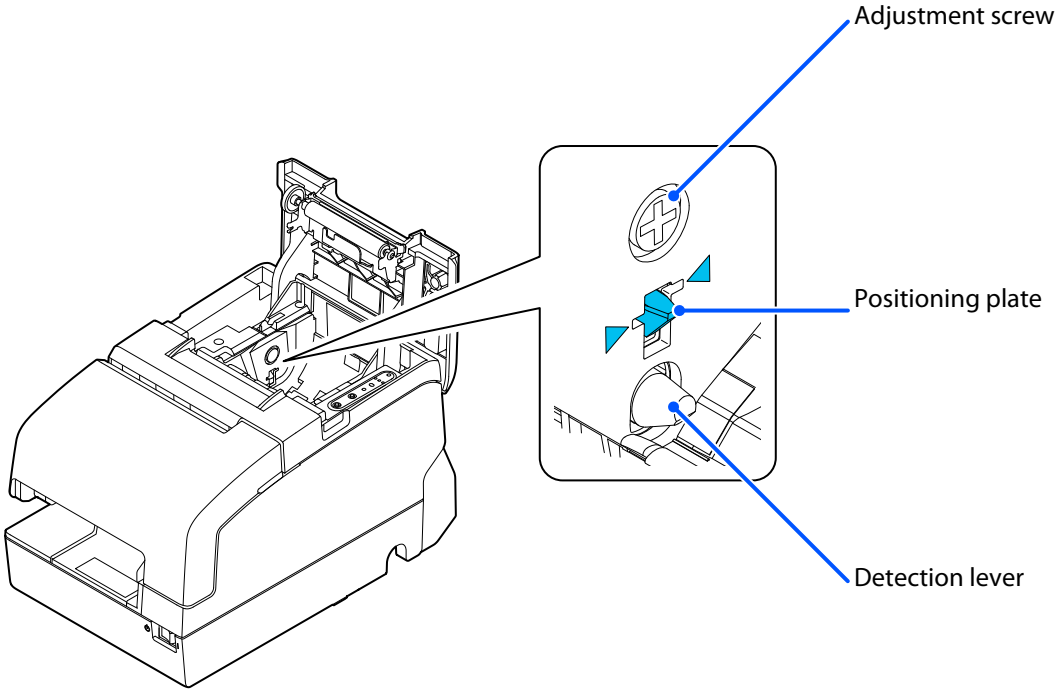

Advanced Usage

Setting the DIP Switches

On this printer, you can make various settings with DIP switches.
The DIP switches are already set for the current interfaces. Change the setting if necessary.
Functions of the DIP switches differ depending on the interface.

Setting Procedure

Follow the steps below to change the DIP switch settings.

CAUTION

- **Before you remove the DIP switch cover, turn off the printer and disconnect all cables.**
  Otherwise, a short-circuit may cause the printer to malfunction.
- **If you open the DIP switch cover, be sure to close the cover and tighten the screw after adjusting the DIP switch.**
  Using this product with the cover open may cause fire or electric shock.

CAUTION

- DIP switch settings are enabled only when the power is turned on or the printer is reset via the interface. If the settings are changed after that, the functions will not change.
- Do not change switches that are fixed to ON or OFF. Otherwise, the printer may not operate normally.

3

1 **Make sure the printer is turned off.**

2 **Unscrew the screw to remove the DIP switch cover from the base of the printer.**

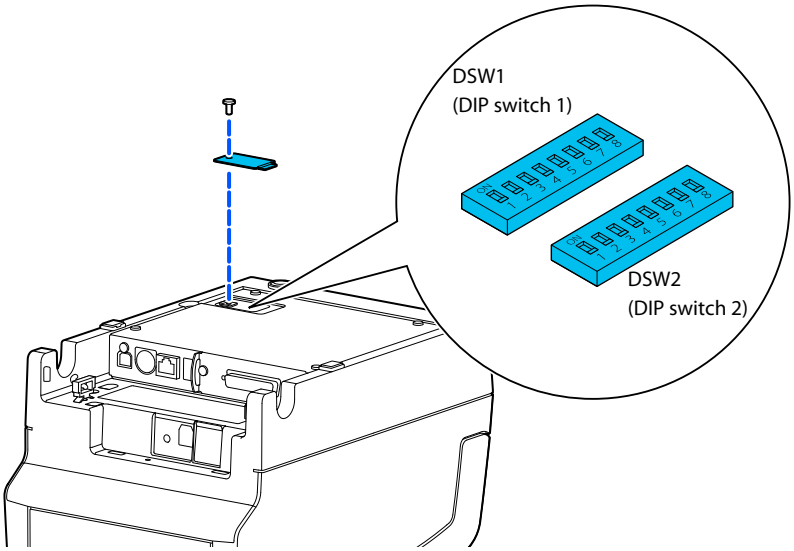

3 **Set the DIP switches, using the tip of a tool, such as a small screwdriver.**

4 **Replace the DIP switch cover, and screw it in place.**

When a Serial Interface is Connected

DIP Switch Bank 1

SW	Function	ON	OFF	Default setting
1-1	Data reception error	Ignored	Prints "?"	OFF
1-2	Reserved (Do not change settings)	Fixed to OFF		OFF
1-3	Handshaking	XON/XOFF	DTR/DSR	OFF
1-4	Word length	7 bits	8 bits	OFF
1-5	Parity check	Yes	No	OFF
1-6	Parity selection	Even	Odd	OFF
1-7	Baud rate selections	See the "Transmission Speed (DIP Switches 1-7/1-8)" table below.		ON
1-8				OFF

Transmission Speed (DIP Switches 1-7/1-8)

Transmission speed (bps: bits per second)	SW 1-7	SW 1-8
4800	ON	ON
9600	OFF	ON
19200 (default setting)	ON	OFF
38400 *	OFF	OFF

bps: bits per second

* The setting value of the communication conditions of the serial interface set in the software settings is reflected. The setting value can be specified as 2400, 4800, 9600, 19200, 38400, 57600, and 115200.

DIP Switch Bank 2

SW	Function	ON	OFF	Default setting
2-1	Handshaking (BUSY condition)	Receive buffer full	• Offline • Receive buffer full	OFF
2-2	Customer display (DM-D) connection	Used with serial connection	Used with USB connection	OFF
2-3–2-4	Selects print density	See "Selecting the Print Density (DIP Switches 2-3/2-4)" on page 65.		OFF
				OFF
2-5	Reserved (Do not change setting)	Fixed to OFF		OFF
2-6	Reserved (Do not change setting)	Fixed to OFF		OFF
2-7	I/F pin 6 reset signal	Enabled	Disabled	OFF
2-8	IF pin 25 reset signal	Enabled	Disabled	OFF

CAUTION

For DIP Switch 2-1 (BUSY condition), see also "Selecting the BUSY Status" on page 65.

When Another Interface is Connected

DIP Switch Bank 1

SW	Function	ON	OFF	Default setting
1-1–1-2	Reserved (Do not change settings)	Fixed to OFF		OFF
1-3	Reserved	-	-	OFF
1-4–1-7	Reserved (Do not change settings)	-	-	OFF
1-8	Reserved	-	-	OFF

DIP Switch Bank 2

SW	Function	ON	OFF	Default setting
2-1	Handshaking (BUSY condition)	Receive buffer full	• Offline • Receive buffer full	OFF
2-2	Customer display (DM-D) connection	Used with serial connection	Used with USB connection	OFF
2-3–2-4	Selects print density	See "Selecting the Print Density (DIP Switches 2-3/2-4)" on page 65.		OFF
2-5	Reserved	-	-	OFF
2-6	Reserved (Do not change settings)	Fixed to OFF		OFF
2-7	Reserved (Do not change settings)	Fixed to OFF		OFF
2-8	I/F pin 31 reset signal*1	Fixed to ON		ON
	Reserved (Do not change settings)	Fixed to ON		ON
		Fixed to OFF *2		OFF

*1 Only for connecting Parallel interface.
*2 Only for connecting UB-U06.

Selecting the Print Density (DIP Switches 2-3/2-4)

Function	SW 2-3	SW 2-4
Do not set	ON	ON
Print density (standard)	OFF	OFF
Print density (medium)	ON	OFF
Print density (dark)	OFF	ON

CAUTION

- If the print density is set to "Medium" or "Dark" level, print speed may be reduced.
- The print density can be set with DIP switches (2-3/2-4) or the software settings. (See "Software Settings" on page 66.)

Selecting the BUSY Status

With DIP switch 2-1, you can select conditions for invoking a BUSY state as either of the following:

- When the receive buffer is full
- When the receive buffer is full or the printer is offline

CAUTION

In either case above, the printer enters the BUSY state after power is turned on (including resetting with the interface) and when a self-test is being run.

Printer BUSY Condition and Status of DIP Switch 2-1

Printer status		DIP SW 2-1	
		ON	OFF
Offline	During the period after power is turned on (including resetting with the interface) to when the printer is ready to receive data.	BUSY	BUSY
	During the self-test.	BUSY	BUSY
	When the cover is open.	-	BUSY
	During paper feed with the Feed button.	-	BUSY
	When the printer stops printing due to a paper-end (when printer has run out of roll paper).	-	BUSY
	When waiting for the paper Feed button to be pressed before macro execution.	-	BUSY
	When an error has occurred.	-	BUSY
When the receive buffer becomes full.		BUSY	BUSY

Software Settings

The printer offers memory switches and customized values which allow you to make various settings for the printer.

The settings can be made in any of the methods listed in the table below or by using the ESC/POS commands.

For an explanation of each function and setting, see "Overview of Each Function" on page 68.

Item\Method		Software Setting Mode	TM-H6000VI Utility for Windows
Memory Switches	Power ON information	✓	✓
	Auto line feed	✓	✓
	Power saving function for USB	✓	✓
	Selection of interface using the customer display	✓	✓
	Select paper sensor(s) to stop printing	✓	✓
	Error signal output	✓	✓
	Paper sensors to output paper end signal	✓	✓
	Operation when the roll paper cover is open while printing	✓	✓
Customized Values	Print Density	✓	✓
	Print Speed	✓	✓
	Automatic Paper Reduction	✓	✓
	Auto Paper Feed&Cut at cover close	✓	✓
	Character/Font Settings	✓	✓*
	Interface Selection	✓	✓
	Interface Settings	✓	✓
	Intelligent Settings	✓	-
	Command Execution (Offline)	✓	✓
	Power Supply Output	✓	✓
	Other Settings	✓	✓*
	Storing Logos	-	✓
	Serial Config	-	✓
	USB Config	-	✓
	Ethernet Config	-	✓
	ePOS-Print Config	-	✓
	ePOS-Devicev Config	-	✓
	Server Direct Print Config	-	✓
	Status Notification Config	-	✓
	Proxy Config	-	✓
IP Address Config		-	✓

Item\Method	Software Setting Mode	TM-H6000VI Utility for Windows
DNS Config	-	✓
Wi-Fi Config	-	✓
Wi-Fi Direct Config	-	✓
SNMP Config	-	✓
Timeout Config	-	✓
Bonjour Config	-	✓
Time Configuration	-	✓
SSL/TLS Config	-	✓
IEEE802.1X Config	-	✓
Ipsec/IP Filtering Config	-	✓
CA Certificate Config	-	✓
Administrator Settings	-	✓

* Some items cannot be set.

NOTE

- The Software Setting Mode allows you to make the settings by operating the buttons on the printer. For instructions on how to operate the buttons, see "Software Setting Mode" on page 84.
- For detailed information about ESC/POS commands, see the Product Specifications. Product Specifications is available after contracting the non-disclosure agreement with Epson. For details, please contact the selling agency.
- The name for [Item/Method] might differ from what is shown in Software Setting Mode or TM-H6000VI Utility.

Overview of Each Function

Print Density

Monochrome

Selectable from 70% to 130% (5% increment)

Initial setting: Depends on the Dip Switch

Depending on the paper type, it is recommended to set the print density as shown in the table below for the best print quality.

Supported papers	Print density	Print Speed
TF50KS-EY, TF60KS-E, TP48KR-NPY, TP48KR-Y, PD160R, PD190R, P220AGB-1, JujoP-KSND-55	7 (100%)	17 (500 m/s)
JujoP-KSND-48, KT55FA	7 (100%)	16 (450 m/s)
KT48FA, KT55PF	7 (100%)	15 (400 m/s)
KT48PF, P5047(55)	8 (105%)	15 (400 m/s)

NOTE

When the print density level is increased, print speed may be reduced.

Multi-Tone

Selectable from 70% to 130% (5% increment)

Initial setting: 100%

NOTE

- With multi-tone printing, 16-stage printing is available.
- Set the monochrome print density first before setting the multi-tone print density.

Print Speed

Selectable from levels 1 to 17 (Slow–Fast)

Initial setting*: level 15 or 16

* Varies depending on the model.

NOTE

Depending on print conditions, such as print duty, print head temperature, and data transmission speed, print speed is automatically adjusted, which may cause white lines due to intermittent print (the motor sometimes stops). To avoid this, keep the print speed constant by setting it lower.

Automatic Paper Reduction

Upper Margin

- Enable
- Disable (initial setting)

Lower Margin

- Enable
- Disable (initial setting)

Blank Line Spacing

- 25%
- 50%
- 75%
- Not Reduce (initial setting)

Blank Space

- 25%
- 50%
- 75%
- Not Reduce (initial setting)

Barcode Height

- 25%
- 50%
- 75%
- Not Reduce (initial setting)

Character Height

- Innner Spacing (75% reduction of inner spacing)
- Inner Spacing & Height (75% reduction of inner spacing and shrinking the character height)
- Not Reduce (initial setting)

NOTE

- No reduction is applied to blank dot lines that exist in a graphic data.
- Reduced barcodes are not guaranteed to be correctly scanned. Make sure to check whether they are properly read by a barcode reader that is actually used.

Auto Paper Feed&Cut at cover close

- Enable (Cut)
- Disable (Not cut) (initial setting)

Character/Font Settings

Default Character Code Page

Selectable from 43 pages including user defined page

Initial setting: PC437 (USA, Standard Europe)

Default International Character Set

Selectable from 18 sets

Initial setting: USA

Embedded Font Replacement

Font A Replacement

- Font A (No Replacement)
- Font B
- Font C

Font B Replacement

- Font A
- Font B (No Replacement)
- Font C

Font C Replacement

- Font A
- Font B
- Font C (No Replacement)

Font Priority

- ANK
- Simplified Chinese
- Traditional Chinese

NOTE	Initial setting that depending on the model.

Interface Selection

- UIB
- Built-in USB
- Ethernet/Wi-Fi
- Auto (Only the UIB or the built-in USB which first established communication after the power is turned on can be used.)
- Multiple (All interfaces are enabled.) (initial setting)

NOTE	• Auto: After the power is turned on, the first interface that establishes communication, either the UIB or the built-in USB, is automatically selected. Other interfaces are disabled. This selection remains valid until the power is turned off or the printer is reset. • Multiple: The first interface to make communication after the power is turned on becomes the main connection, and other interfaces can be used as secondary connections.

Interface Settings

Serial Interface Baud Rate

- 2400 bps
- 4800 bps
- 9600 bps
- 19200 bps
- 38400 bps (initial setting)
- 57600 bps
- 115200 bps

NOTE	Priority is given to the settings for DIP switches 1-7 and 1-8. When configuring these settings in Software Settings, set DIP switches 1-7 and 1-8 to OFF.

USB Interface Settings

USB power-saving function

- Enable
- Disable (initial setting)

NOTE	• The USB power-saving function is enabled in the following cases. ∗ The USB power-saving function of the printer is enabled. ∗ The class is set to vendor-defined class. ∗ The system allows the USB driver to support the USB power-saving function.

Interface switch waiting time

Select the number of seconds from 1 to 10 in increments of 1 second, or 60 seconds.

Initial setting: 10 seconds

Main connection interface

- UIB
- Built-in USB
- Ethernet/Wi-Fi
- Auto (initial settting)
- No main connection I/F

CAUTION	• When using this printer with multiple interfaces, make sure the interface that is always connected to be set as the main connection. • You cannot use wired LAN and wireless LAN at the same time.

The "Auto" setting allows you to use the first interface you communicate with as the main connection and the other interfaces as secondary connections after you turn on the printer. For the limitations on the main connection and secondary connections, see the table below.

Connection Interface	Connection Priority	ESC/POS Command Restrictions	Retaining of Print Settings When Connection Is Terminated
Main connection	High	No	Retained

Connection Interface	Connection Priority	ESC/POS Command Restrictions	Retaining of Print Settings When Connection Is Terminated
Secondary connection	Low	Yes*	Initialized

*For details, see the ESC/POS Command Reference.

NOTE
- The displayed items vary depending on the interface configuration.
- For information about the function, see "Printing Using Multiple Interfaces" on page 31.

Auto Line Feed

- Always disabled (initial setting)
- Always enabled

Error Signal Output

- Enable (initial setting)
- Disable

DM-D Enabled Interfaces

- All (initial setting)
- Serial I/F Only

Intelligent Settings

Print Data Parsing

- Enable
- Disable (initial setting)

Command Execution (Offline)

- Enable
- Disable (initial setting)

Power Supply Output

- Level 1 (Low)
- Level 2
- Level 3 (High) (initial setting)

Other Settings

Printer Model

- TM-H6000VI (initial setting)
- TM-H6000IV

- TM-H6000V

Column Emulation

- 42 column mode (standard column mode) (initial setting)
- 46 column mode

NV Capacity

User NV Memory

- 1 KB (initial setting)
- 64 KB
- 128 KB
- 192 KB

NV Graphics Memory

- None (0 KB)
- 64 KB
- 128 KB
- 192 KB
- 256 KB
- 320 KB
- 384 KB (initial setting)

LED indicator when I/F starting

- Enable
- Disable (initial setting)

Error Control

Paper Jam Detection

- Enable (initial setting)
- Disable

Receipt Unit Open

- Offline (initial setting)
- Recoverable Error

Paper sensor to stop print

- Enable (initial setting)
- Disable

Power On Notice

- Disable
- Enable (initial setting)

Setting and reference items shared by Ethernet/Wi-Fi

Item	Parameter	Default setting	TM-H6000VI Utility		Web Browser		Status Sheet
			Reference	Setting	Reference	Setting	Reference
MAC Address			✓	-	✓	-	✓
IP Address		192.168.192.168 *1	✓	✓	✓	✓	✓
Subnet Mask		255.255.255.0 *1	✓	✓	✓	✓	✓
Gateway Address		0.0.0.0 *1	✓	✓	✓	✓	✓
Acquiring the IP Address	Manual / Auto (DHCP)	Auto (DHCP)	✓	✓	✓	✓	✓
APIPA	Enable/Disable	Disable	✓	✓	✓	✓	-
IP Address Printing	Enable/Disable	Enable	✓	✓	✓	✓	-
DNS Server AddressSetting	Auto/Manual	Auto	✓	✓	✓	✓	✓
Acquire host name automatically	Auto/Manual	Manual	✓	✓	✓	✓	✓
Host Name		" "	✓	✓	✓	✓	✓
Acquire domain name automatically	Auto/Manual	Manual	✓	✓	✓	✓	✓
Domain Name		" "	✓	✓	✓	✓	✓
Register the network interface's address to DNS server	Auto/Manual	Manual	✓	✓	✓	✓	✓
Administrator Name	(Up to 256 characters)	" " (no value)	✓	✓	✓	✓	-
Location	(Up to 256 characters)	" " (no value)	✓	✓	✓	✓	-
Password	(Up to 20 characters)	*2	✓	✓	✓	✓	- *3
Community Name (read only)	(Up to 32 characters)	"public"	✓	-	✓	-	-

3

Item	Parameter	Default setting	TM-H6000VI Utility		Web Browser		Status Sheet
			Reference	Setting	Reference	Setting	Reference
Community Name (read/write)	(Up to 32 characters)	" " (no value)	✓	✓	✓	✓	-
Wellknown Community Name	Enable/Disable	Enable	✓	✓	✓	✓	-
IP Trap1–4	Enable/Disable	Disable	✓	✓	✓	✓	-
Community Name (IP Trap #1–4)	(Up to 32 characters)	" " (no value)	✓	✓	✓	✓	-
IP Trap #1–4 Address	-	0.0.0.0	✓	✓	✓	✓	-
SNMPv3	Enable/Disable	Disable	✓	✓	✓	✓	✓
Socket Timeout	1-300 sec / 0 (no timeout)	90 sec	✓	✓	✓	✓	-
Time Server	Enable/Disable	Disable	✓	✓	✓	✓	✓
Time Server Status	Success / Failure /Invalid	Invalid	✓	✓	✓	✓	✓
Time Server Address	-	0.0.0.0	✓	✓	✓	✓	✓
Time Server Interval	1-10080 min	60 min	✓	✓	✓	✓	✓
Bonjour	Enable/Disable	Enable	✓	✓	✓	✓	✓
SLP	Enable/Disable	Enable	-	-	✓	✓	✓
LLTD	Enable/Disable	Enable	-	-	✓	✓	-
LLMNR	Enable/Disable	Enable	-	-	✓	✓	✓
IPsec	Enable/Disable	Disable	✓	✓	✓	✓	✓
SSLStrength	Low/Medium/ High	Low	✓	✓	✓	✓	✓
https redirect	Enable/Disable	Enable	✓	✓	✓	✓	✓

*1: Initial value when "Acquiring the IP Address" is set to "Manual".
*2: Refer to "Default Password for Setup / Default Passphrase for SimpleAP" on page 157.
*3: If a password label is applied to the product, you can check the default password.

Setting and reference items for Ethernet

Item	Parameter	Default setting	TM-H6000VI Utility		Web Browser		Status Sheet
			Reference	Setting	Reference	Setting	Reference
Communication mode setting	Auto Negotiation / 10BASE-T Half / 10BASE-T Full / 100BASE-TX Half / 100BASE-TX Full	Auto negotiation	✓	✓	✓	✓	✓
Port Type	Auto/MDI/MDX	Auto	-	-	✓	✓	✓

Setting and reference items for Wi-Fi

Item	Parameter	Default setting	TM-H6000VI Utility		Web Browser		Status Sheet
			Reference	Setting	Reference	Setting	Reference
SSID	(Up to 32 characters)	EpsonNet	✓	✓	✓	✓	✓
WPA/WPA2 Pre-Shared Key (Pass Phrase)	8-63 ASCII characters or max 64 Hexadecimal characters	" "	-	✓	-	✓	-
MAC Address	-	(refer to WLAN option's Label)	✓	-	✓	-	✓
Network mode	Infrastructure	Infrastructure	✓	✓	✓	✓	✓
WLAN Communication Standard	When using OT-WL06 (Infrastructure) 802.11b/g/n 802.11a/n/ac Auto	(Infrastructure) Auto	✓	✓	✓	✓	✓
Channel *	2.4GHz 1-13 5GHz 36, 40, 44, 48, 52, 56, 60, 64, 100, 104, 108, 112, 116, 120, 124, 128, 132, 136, 140, 149, 153, 157, 161, 165	1	-	-	✓	-	✓
Security Type	None WPA/WPA2-PSK WPA3-SAE WPA2/WPA3-Enterprise	WPA2-PSK	✓	✓	✓	✓	✓
WLAN Power Save	Enable/Disable	Enable	✓	✓	✓	✓	-

* Channels available for use vary depending on the countries and regions. For details on Wi-Fi channels, refer to the user's manual of the wireless LAN unit.

MAC Address Confirmation

You can check the printer's MAC address using the following procedures.

- Printing the status sheet
- Printing the self-test
- Using a Web browser to confirm (Web Config function)

Setting/Checking Modes

As well as print mode, the following modes are also provided for making various printer settings and checking items.

- Self-test mode
- NV Graphics Information
- Receipt Enhancement Information
- Software Settings
- Restore Default Values
- Interface Setup
- TM-Intelligent Information
- Peripheral Device Information
- Hexadecimal Dump

The self-test mode or hexadecimal dumping mode is selected depending on the operation performed when the power is turned on.

During a self-test, press the Feed button to select one of the print modes shown above.

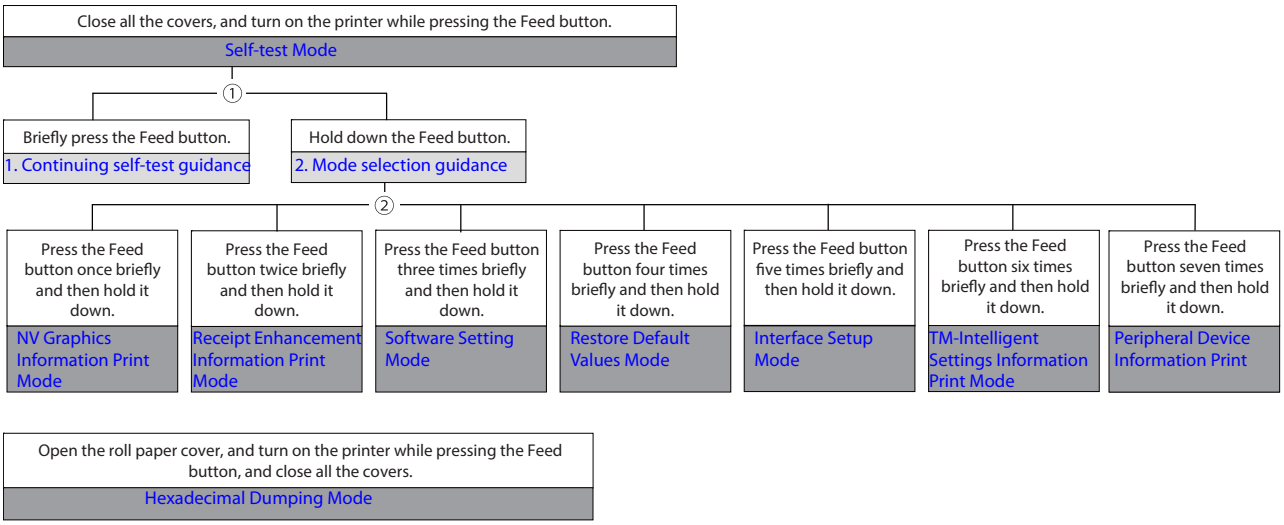

In 1 and 2, the following guidances are printed, the Paper LED flashes, and instructs the user's operations.

1. Continuing self-test guidance

```
Select Modes by pressing Feed button.
  Continue SELF-TEST: Less than 1 second
  Mode Selection    : 1 second or more
```

2. Mode selection guidance

```
Mode Selection

Modes
  0: Exit and Reboot Printer
  1: NV Graphics Information
  2: Receipt Enhancement Information
  3: Customize Value Settings
  4: Restore Default Values
  5: Interface Setup
  6: TM-Intelligent Information
  7: Peripheral Device Information
  More than above: None

Select Modes by executing following
procedure.
   step 1. Press the Feed button less
           than 1 second as many times
           as the selected mode number.
   step 2. Press Feed button for 1
           second or more.
```

Self-test Mode

You can check the following items using the self-test.

- Printer Name
- Printer Firmware Version
- Product Serial number
- Interface type
- Condition for BUSY
- Resident fonts
- Whether the automatic line feed function is enabled or not
- Customer display connection information
- Print density setting
- Installed device
- Recovery point information
- Maintenance Information
- DIP switch settings

Follow the steps below. You can also run the self-test using the ESC/POS commands.

1 **Make sure all the covers are closed.**

2 **While pressing the Feed button, turn on the printer. (Hold down the Feed button until printing starts.)**

After printing the current print status, a Continuing self-test guidance is printed, and the Paper LED flashes.

3 **Briefly press the Feed button (less than one second) to continue the self-test.**

The printer prints a rolling pattern on the roll paper, using the built-in character set.
After "*** completed ***" is printed, the printer initializes and switches to standard mode.

NV Graphics Information Print Mode

Prints the following NV graphic information registered to the printer.

- Capacity of the NV graphics
- Used capacity of the NV graphics
- Unused capacity of the NV graphics
- Number of NV graphics that are registered
- Key code, number of dots in X direction, number of dots in Y direction to be defined.
- NV graphics data

NOTE

For details on NV graphics, see "NV Graphics Memory" on page 26.

Follow the steps below.

1 **After running a self-test, hold down the Feed button for at least one second, and then select the Mode selection.**

The Mode selection guidance is printed, and the Paper LED flashes.

2 **After briefly (less than one second) pressing the Feed button once, hold it down for at least one second, to print the NV Graphics Information.**

After information printing, the Mode selection guidance is printed again.

3 **To finish, turn off the power, or select "Exit and Reboot Printer".**

Receipt Enhancement Information Print Mode

You can check the following items using the R/E information mode:

- Automatic top logo setting
- Automatic bottom logo setting
- Extended settings for automatic top/bottom logo

Follow the steps below.

1. **After running a self-test, hold down the Feed button for at least one second, and then select the Mode selection.**
   The Mode selection guidance is printed, and the Paper LED flashes.

2. **After briefly (less than one second) pressing the Feed button twice, hold it down for at least one second, to print the Receipt Enhancement Information.**
   After information printing, the Mode selection guidance is printed again.

3. **To finish, turn off the power, or select "Exit and Reboot Printer".**

Software Setting Mode

Set the printer's memory switches and customized values.

See "Software Settings" on page 66 for information about available functions and settings and how to set them.

> **NOTE**
> You can also make the software settings using the ESC/POS commands.

Follow the steps below.

1 After running a self-test, hold down the Feed button for at least one second to enter the Mode selection.

The Mode selection guidance is printed, and the Paper LED flashes.

2 Briefly press the Feed button three times (less than one second), hold it down for at least one second to enter the Software settings mode (Customize Value Setting).

The Software setting mode guidance is printed, and the Paper LED flashes.

```
        Customize Value Settings


Modes
   0: Exit
   1: Print Current Settings
   2: Print Density
   3: Print Speed
   4: Automatic Paper Reduction
   5: Auto Paper Feed&Cut at cover close
   8: Character/Font Settings
   9: Interface Selection
   10: Interface Settings
   11: Intelligent Settings
   12: Command Execution (Offline)
   13: Power Supply Output
   14: Other Settings

Select Modes by executing following
procedure.
   step 1. Press the Feed button less
           than 1 second as many times
           as the selected mode number.
   step 2. Press Feed button for 1
           second or more.
```

3 **After briefly pressing the Feed button (less than one second) for the number of times shown in the print result, hold down the button for more than one second to select the setting items.**

The setting selected as the setting item, the current settings and default settings are printed.
Depending on the setting item, you may need to continue selecting the setting item before the settings are printed.
For details on setting items, see "Software Settings" on page 66.

> **CAUTION**
> When set to a value other than those in the software setting mode, the current settings are not printed.

4 **Select a setting by briefly pressing the Feed button (less than one second) for the number of times applicable to the setting, and then hold down the button for more than one second to confirm your selection.**

After saving the settings, the Software setting mode guidance is printed, and the Paper LED flashes.

5 **To close Software setting mode, turn off the printer, or select "Exit" to return to Mode selection guidance, and then select "Exit and Reboot Printer".**

> **NOTE**
> - To select 0 as the item number, hold down the Feed button until printing starts.
> - If the button is pressed a number of times that is not displayed by the Setup guidance, the operation is invalid and the same guidance is printed.

Restore Default Values Mode

In Restore default values mode, following values saved on NV Memory will be set back to default settings. When any error occurs, you can use to specify the reason.

Setting Contents	Restore default settings (Restore)	Restore default settings and Delete definition data (Restore & Delete Defined Data)
Customized value	✓	✓
Memory switch	✓	✓
R/E (Receipt Enhancement) settings	✓	✓
Communication condition of USB interface	✓	✓
Communication condition of network interface	✓	✓
TM-Intelligent function settings	✓	✓
NV graphics	-	✓
NV bit image	-	✓
User-defined page	-	✓
User NV Memory	-	✓

Follow the steps below.

1 **After running a self-test, hold down the Feed button for at least one second to enter the Mode selection.**
The Mode selection guidance is printed, and the Paper LED flashes.

2 **Briefly press the Feed button four times (less than one second), hold it down for at least one second to enter the Restore Default Values.**
The guidance is printed.

3 **When only restoring the default settings:**
Briefly press the Feed button once (less than one second), hold it down for at least one second. (Hold down the Feed button until the message of restore completion is printed.)

When restoring default settings and deleting user defined data:
Briefly press the Feed button twice (less than one second), and then hold it down for at least one second. (Hold down the Feed button until the restoration complete message is printed.)

4 **To finish, turn off the power.**

NOTE

If you could not confirm that settings were restored to the default values, execute [Restore Default Values Mode] again. If the firmware version is 40.12 ESC/POS or later, the following message is printed when the restoration fails.

```
Failed restoration to Factory Default.
Please retry after restarting printer.
```

Interface Setup Mode

Use this mode to setup the interface and other settings.

Follow the steps below.

1 **After running a self-test, hold down the Feed button for at least one second to enter the Mode selection.**

The Mode selection guidance is printed, and the Paper LED flashes.

2 **Briefly press the Feed button five times (less than one second), hold it down for at least one second to enter the Interface Setup mode.**

The guidance is printed.

3 **After briefly pressing the Feed button (less than one second) for the number of times shown in the print result, hold down the button for more than one second to select the setting items.**

Reset to Factory Default

Select [Wi-Fi & Ethernet Setup] and select [Initialize] to restore the communication settings to the factory default. The printer is reset and restarted.

NOTE

If you could not confirm that the interface settings were initialized, execute [Initialize] again. If the firmware version is 40.12 ESC/POS or later, the following message is printed when the initialization fails.

```
Failed restoration to Factory Default.
Please retry after restarting printer.
```

TM-Intelligent Settings Information Print Mode

This function allows you to print TM-Intelligent setting information currently registered in the printer.

Follow the steps below.

1. **After running a self-test, hold down the Feed button for at least one second to enter the Mode selection.**
   The Mode selection guidance is printed, and the Paper LED flashes.

2. **Briefly press the Feed button six times (less than one second), hold it down for at least one second to print the TM-Intelligent Settings Information.**
   After information printing, the Mode selection guidance is printed again.

3. **To finish, turn off the power, or select "Exit and Reboot Printer".**

Peripheral Device Information Print Mode

This function allows you to print information for the device currently connected to the printer.

- Customer Display information
- Wi-Fi adapter information

Follow the steps below.

1. **After running a self-test, hold down the Feed button for at least one second to enter the Mode selection.**
   The Mode selection guidance is printed, and the Paper LED flashes.

2. **Briefly press the Feed button seven times (less than one second), hold it down for at least one second to print the Peripheral Device Information.**
   After information printing, the Mode selection guidance is printed again.

3. **To finish, turn off the power, or select "Exit and Reboot Printer".**

Hexadecimal Dumping Mode

In hexadecimal dumping mode, data from the host device is printed in hexadecimal numbers and characters. By comparing the print outs and the program, you can check whether or not data is being sent to the printer correctly.

NOTE

- When there are no characters that correspond to the print data, " . " is printed.
- If you press the Feed button when there is less than one line of print data, one line is printed.
- During hexadecimal dumping mode, applications that check the printer status may not operate correctly. The printer only returns the status for the "Real-time transmission status" command.

Follow the steps below. Entering the hexadecimal dumping mode is also possible using the ESC/POS commands.

1 **Open the roll paper cover.**

2 **While pressing the Feed button, turn on the printer. (Hold down the Feed button until all Error LEDs and Paper LEDs turn on.)**

3 **Close the roll paper cover.**

From this point, all data received by the printer is printed in the corresponding hexadecimal numbers and ASCII characters.

Example of printing in hexadecimal dumping mode:

```
Hexadecimal Dump
To terminate hexadecimal dump,
press FEED button three times.




1B 21 00 1B 26 02 40 40 1B 69 . ! . . & . @ @ . i
1B 25 01 1B 63 34 00 1B 30 31 . % . . c 4 . . 0 1
41 42 43 44 45 46 47 48 49 4A A B C D E F G H I J

          ***  completed  ***
```

4 **To close hexadecimal dumping mode, turn off the printer after printing is complete, or press the Feed button for three times.**

Printing a Status Sheet

Print the interface settings.

CAUTION

- After the status sheet is printed, only the print settings of the mainly connected interface are retained. For the mainly connected interface, see "Printing Using Multiple Interfaces" on page 31.
- Ethernet and Wi-Fi status sheets are not printed while the printing communication protocol is being established. They will be printed after the connection is cut off (including being cut due to a time out).
- "(none)" is printed for the "Connected Peripheral" if no peripherals are connected to the USB Type-A connector.

NOTE

When the power LED is flashing, wait until it remains lit to start printing.

Using the Status Sheet Button

1 Check that the printer is turned on.

Make sure the roll paper cover is closed.

2 If there is a connector cover, remove the cover.

See "Attaching and Removing the Connector Cover" on page 47 for details on removing the connector cover.

3 Hold down the status sheet button for at least three seconds.

A guidance that starts with "Next Action" will be printed.
For details on Status sheet button, See "Connectors" on page 19.

4 Press the Feed button briefly (less than one second) the number of times equal to the number indicated to the left of the status sheet you want to print, then hold down the button for at least one second.

Printing of a status sheet will start. The printer will return to normal mode after printing is finished.

Using the Feed button

1 Check that the printer is on.

2 Open the roll paper cover.

3 Hold down the Feed button for at least a one second.

4 Close the roll paper cover.

A guidance that starts with "Next Action" will be printed.

5 **Press the Feed button briefly (less than one second) the number of times equal to the number indicated to the left of the status sheet you want to print, then hold down the button for at least one second.**

Printing of a status sheet will start. The printer will return to normal mode after printing is finished.

Network Status Sheet (Wi-Fi & Ethernet Interface)	Sever access test result
HHH Network Status Sheet HHH <General Info> MAC Address XX:XX:XX:XX:XX:XX Wi-Fi Direct MAC XX:XX:XX:XX:XX:XX Firmware XX.XX (XXXXXXXXXXXXX) Printer Model TM-H6000VI Device Name XXXXXXXX <Ethernet> Network Status Auto(Disconnected) Port Type Auto <Wireless> Wireless Off Comm Mode None Operation Mode None Comm Speed None SSID None Channel None : : <Wi-Fi Direct> Simple AP Off Operation Mode None SSID None Password None Channel None : <TCP/IP IPv4> IPv4 Enable Obtain IP Address Unknown IP Address None Subnet Mask None Default Gateway None APIPA Disable : : <TCP/IP IPv6> IPv6 Disable : :	Check Network Connection FAIL Ethernet Cable Connection NG IP Address Check Unchecked Detailed IP Setup Check Unchecked Network Status Printer Name XXXXXXXX Printer Model TM-H6000VI Series IP Address XXX.XXX.XXX.XX Subnet Mask XXX.XXX.XXX.X Default Gateway X.X.X.X MAC Address XX:XX:XX:XX:XX:XX

Example of Printing During Recoverable Errors or When Waiting for Paper Removal (Slip)

A status sheet for Slip printer is printed if the power is turned on during paper removal standby.

If this occurs, remove the slip paper. If paper is not set, refer to "Slip paper is jammed" on page 121 and remove any small pieces of paper and any other foreign material.

Example of printing

Recoverable errors

```
-----------------------------------------------
*** Error ***

Cause : (***************)[Error Code]
Position : (**********)

Recovery method :
Open the front cover and pull the blue
lever, then remove the paper.
After that, close the front cover and
remove the error according to
your system.
If the error can't be resolved please
contact technical support.
-----------------------------------------------
```

Waiting for paper removal

```
-----------------------------------------------
*** Waiting for slip to be removed ***

Recovery method :
Open the front cover and pull the blue
lever, then remove the paper.
-----------------------------------------------
```

NOTE

Depending on the product model, this function may not be supported.

Resetting the Interface Settings

Follow the steps below to restore the interface settings to the factory default.

NOTE

- The interface settings can also be initialized from the Interface Setup Mode. See "Interface Setup Mode" on page 87 for more details.
- Only network settings are returned to their defaults.

1 **Turn off the printer and close all the covers.**

2 **If the connector cover is attached, remove the cover.**

See "Attaching and Removing the Connector Cover" on page 47 for details on removing the connector cover.

3 **Hold down the status sheet button while turning on the printer.**

A message is printed indicating that resetting is being performed, and the printer restarts.
For details on Status sheet button, See "Connectors" on page 19.

CAUTION

Hold down the status sheet button until the initialization execution message is printed.

NOTE

If you could not confirm that the interface settings were initialized, execute [Initialize] again. If the firmware version is 40.12 ESC/POS or later, the following message is printed when the initialization fails.

```
Failed restoration to Factory Default.
Please retry after restarting printer.
```

TM-Intelligent Function

This product supports the TM-Intelligent function and provides the following functions.

- Server direct print
- Status Notification

You can set each function in the Setup Utilities. For details on the setting method for TM-H6000VI Utility, see the TM-H6000VI Utility User's Manual.

You can also download a dedicated manual and sample programs from our website.

Server direct print

The server direct function allows this product to acquire print data from a Web server and then print.

By including print data in a response to request from this product, the Web server application can print to this product or a TM printer on the network.

The features are as follows.

- You can acquire print data from three different URLs.
- Print data is available in ePOS-Print XML format.
- You can use this product to print to TM printers on a network.
- Only the receipt printing function can be used for server direct printing.
  Cannot print the slip printing function, validation printing function and endorsement printing function.

Regarding details on server direct printing, see the Server Direct Print User's Manual.

Status Notification

Status Notification is used to periodically notify the TM printers with SDP support status to the Web server. The Web server automatically responds with an empty response.

Operating the printer management application created by the user with the Web server enables grasp of the status of the printers installed in a shop from a remote place.

For more details about the Status Notification, refer to the "Server Direct Print User's Manual".

Web Config

Web Config is a printer's built-in web page that allows you to check and change printer settings on your browser.

To use Web Config, you need to set your computer's IP address to the same segment as the printer.

How to Start Web Config

1 **Start your web browser on a computer or smart device on the network and enter the IP address of the printer in the address field.**

Example for HTTPS	Example for HTTP
IPv4: https://192.0.2.111/ IPv6: https://[2001:db8::1000:1]/	IPv4: http://192.0.2.111/ IPv6: http://[2001:db8::1000:1]/

2 **After Web Config starts, select the menu you wish to configure.**

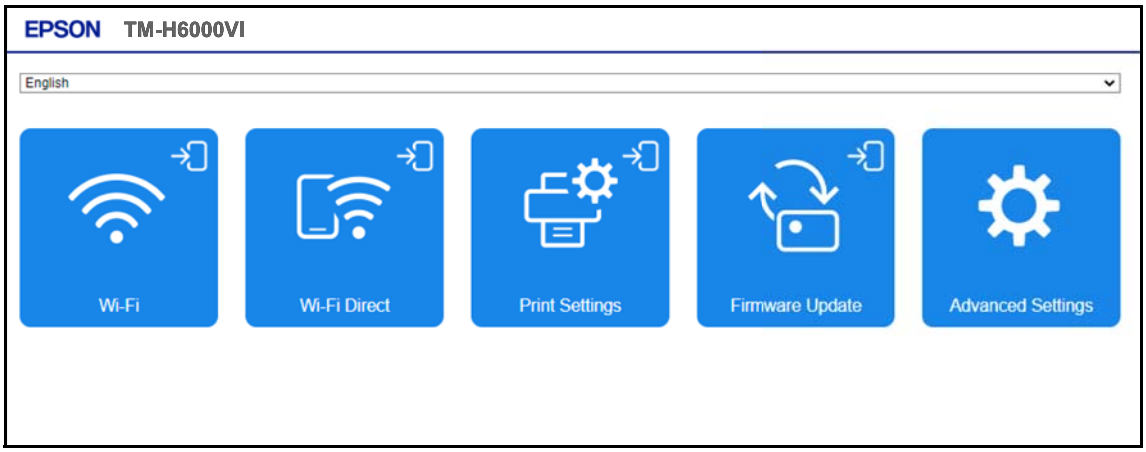

3 **When the authentication screen appears, enter your password and log in.**

For information about the default password, see "Default Password for Setup / Default Passphrase for SimpleAP" on page 157.

NOTE	Enable JavaScript in your browser. Because a self-signed certificate owned by the printer is used when accessing HTTPS, a warning will appear in the browser when Web Config is started.

What can be Configured in Web Config

For information on what can be configured in Web Config, refer to the "Web Config Reference Guide". The Web Config Reference Guide can be obtained from the URL listed in "Download" on page 100.

Application Development Information

This chapter describes how to control the printer and gives information useful for printer application development.

Controlling the Printer

The printer supports the following command systems:

- ESC/POS
- ePOS-Print XML
- ePOS-Device XML

Users can control the printer by using the followings.

- EPSON Advanced Printer Driver
- EPSON OPOS ADK
- EPSON OPOS ADK for .NET
- EPSON JavaPOS ADK
- Server Direct Print

ePOS-Print XML

ePOS-Print XML is the Epson original control command system for POS printers defined in XML. With ePOS-Print XML commands, you can print in environments where HTTP communication is available and from OS applications. For detailed information about ePOS-Print XML, see the "ePOS-Print XML User's Manual".

ePOS-Device XML

ePOS-Device XML is a command system that uses XML to define functions to control various POS peripherals (including this product printer unit) connected to this product. An application creates a request message in XML format and sends it to this product using socket communications. For detailed information about ePOS-Device XML, see the "ePOS-Device XML User's Manual".

ESC/POS

ESC/POS is the Epson original printer command system for POS printers and customer display. With ESC/POS commands, you can directly control all the printer functions, but detailed knowledge of printer specifications or combination of commands is required, compared to using drivers and applications.

For detailed information about ESC/POS commands, see the Product Specifications. Product Specifications is available after contracting the non-disclosure agreement with Epson. For details, please contact the selling agency.

Controlling the Cash Drawer

A pulse output is sent to drawer kick connector pin 2 or pin 5, and you can open the drawer.

You can also check the open/close status of the drawer by checking the signal level of the drawer kick connector pin 3. These controls are executed by a driver or by commands.

ESC/POS Commands

Prepare the output command for the specified pulse and the status transmission command.

For detailed information about ESC/POS commands, see the Product Specifications. Product Specifications is available after contracting the non-disclosure agreement with Epson. For details, please contact the selling agency.

For Windows Printer Drivers (APD)

You can set so that the drawer opens at the start/end of printing or start/end of a page. For details, see the manual for drivers.

For details on control, see the manual for Status API of the driver.

OPOS (OCX Driver)

Register a cash drawer using the SetupPOS Utility, and control using the OpenDrawer method or the DirectIO function.

For details, see the "EPSON OPOS ADK MANUAL APPLICATION DEVELOPMENT GUIDE CashDrawer" and the "UnifiedPOS Specification".

OPOS for .NET

Register a cash drawer using the SetupPOS Utility, and control using the OpenDrawer method or the DirectIO function.

For details, see the "EPSON OPOS ADK for .NET MANUAL Application Development Guide Cash Drawer (EPSON Standard)" and the "UnifiedPOS Specification".

JavaPOS

Register a cash drawer using the SetupPOS Utility, and control using the OpenDrawer method or the DirectIO function.

For details, see the "EPSON JavaPOS ADK MANUAL Application Development Guide Cash Drawer (EPSON Standard)" and the "UnifiedPOS Specification".

Server Direct Print

Prepare the output command for the specified pulse and the status transmission command.

For details, see the "Server Direct Print User's Manual".

Software

The following software is provided for application development.

Development Kits

Software	Description
EPSON OPOS ADK	This OCX driver can control POS peripherals using OLE technology. * Because controlling POS peripherals with original commands is not required on the application side, efficient system development is possible.
EPSON OPOS ADK for .NET	The OPOS ADK for .NET is a POS industry standard printer driver compatible with Microsoft POS for .NET. It allows you to develop applications that are compatible with the UPOS (Unified POS) specification. When developing applications, use a separate development environment such as Microsoft Visual Studio .NET.
EPSON JavaPOS ADK (Windows/ Linux)	JavaPOS is the standard specification which defines an architecture and device interface (API) to access various POS devices from a Java based system. Using JavaPOS standard API allows control with Java based applications of functions inherent to each device. A flexible design with Java language and JavaPOS enables many different types of computer systems, such as stand alone or network configuration, to use a same application. You can use JavaPOS to build applications and drivers independently of platforms. This allows flexible configurations using thin clients to meet the system requirements.

*: OLE technology developed by Microsoft divides software into part blocks. The OPOS driver is presupposed to be used with a development environment, such as Visual Basic, unlike ordinary Windows printer drivers. It is not a driver to be used for printing from commercial applications.

You can acquire documents regarding the UnifiedPOS from the following link.

https://www.omg.org/spec/UPOS

Drivers

Software	Description	Operating environment
EPSON Advanced Printer Driver (APD)	In addition to ordinary Windows printer driver functions, this driver has controls specific to POS. The Status API (Epson original DLL) that monitors printer status and sends ESC/POS commands is also attached to this driver.	Windows
EPSON TM Virtual Port Driver	This is a serial/parallel-USB/LAN conversion driver to make an Epson TM/BA/EU printer connected via USB or LAN accessible from a POS application through a virtual serial or parallel port. It allows you to directly control devices connected via USB or LAN with ESC/POS commands without making changes in the POS application that controls devices connected via a serial or parallel interface.	Windows
TM Series Printer Driver for Linux	This driver allows you to control the printer using Common UNIX Printing System (CUPS) on GNU/Linux. This is a full raster printer driver. It is able to print images, text, and vector graphics etc., that an application displays.	GNU/Linux

Utilities

Software	Description	Operating environment
TM-H6000VI Utility	A utility for checking and changing various printer settings. Use this utility to: • Check the current settings • Test operation • Store logos • Set paper saving • Set printing control • Set communication interfaces • Configure the network settings • Configure the TM-Intelligent function settings • Save/restore settings	Windows
Epson TM-H6000VI Slip Paper Sensor Adjustment Tool	This tool is for adjusting the slip paper sensor of the TM-H6000VI. Use this tool if the Slip LED blinks even though slip paper has been removed from the printer.	Windows
Epson Deployment Tool	Use to make network and printer settings simultaneously. Allows you to make settings efficiently at the time of introducing TM printers for the first time, or when configuring multiple TM printers at the same time.	Windows

Epson Monitoring Tool	Use to check a list of status for the Epson printers connected to the network. You can also update certificates for multiple printers used for WPA-Enterprise/WPA2-Enterprise in a batch.	Windows
BmpToRaster	You can convert BMP image files to multi tone or black and white print command data.	Windows
TM-H6000VI Firmware Updater	This tool allows you to update the firmware for the TM-H6000VI.	Windows

Others

Manual	Description
ePOS-Print XML User's Manual	Describes ePOS-Print XML statements. This manual comes with sample programs.
ePOS-Device XML User's Manual	Describes ePOS-Device XML statements. This manual comes with sample programs.
Server Direct Print User's Manual	Describes the details and specifications of Server Direct Print. This manual comes with sample programs.
Web Config Reference Guide	Describes items that can be configured in Web Config.

Download

You can obtain software and manuals from one of the following URLs.

For customers in North America, go to the following web site and follow the on-screen instructions.

https://www.epson.com/support/

For customers in other countries and regions, go to the following web site:

https://epson.sn

Precautions when Developing Applications

This section describes information that you should be aware of when developing systems and applications using this product.

Minimum Paper Length when Cutting

When printing short in the vertical direction of the paper, cut the paper at least 20 mm {0.79 in} away from the previous cutting position. If the cut paper is too short, the top edge of the paper may get caught in the opening of the case during paper feeding, causing a paper jam.

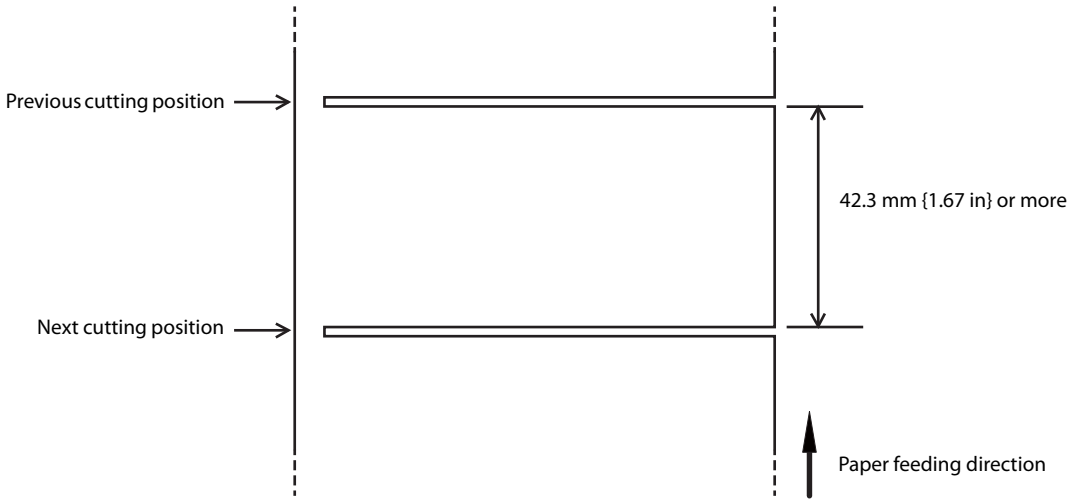

Notes on Printing Barcodes and Two-Dimensional Symbols

- Ensure adequate space around the code; “quiet zone” that is required for the code.
- To print PDF417 (two-dimensional symbol), the following settings are recommended.

  Module height: 3 to 5 times the module width

  Vertical size of the symbol: approximately 5 mm {0.20 in} or more
- The recognition rate of ladder bar codes and two-dimensional symbols may vary depending on widths of the modules, print density, environmental temperature, type of paper, and characteristics of the reader. Make sure to check the recognition rate beforehand to determine the settings and use conditions so that the restrictions of the reader are satisfied.
- Reading quality of multi-gradation bar codes and two-dimensional symbols is not guaranteed.
- When printing a ladder barcode or two-dimensional symbol that is created as a graphics data, set the print speed to level 4.
- Note the following when printing barcodes on the face of a slip:
  - Ladder barcodes and 2-dimensional symbols are not supported.
  - Be sure to add HRI characters because the recognized rate of barcode reading may vary depending on density, gradation, or performance capabilities of barcode reader used.

Handling

This chapter describes basic handling of the printer.

CAUTION

- **Be sure to use the certified paper. ("Paper Specifications" on page 139)**
- **Do not insert any paper that has clips or staples. This may cause paper jams and damage.**
- **Make sure the slip/validation paper is flat and without curls, folds, or wrinkles.**

Installing and Replacing the Roll Paper

Follow the steps below to install/replace the roll paper.

1 **Make sure the printer is turned on.**

2 **Open the roll paper cover.**

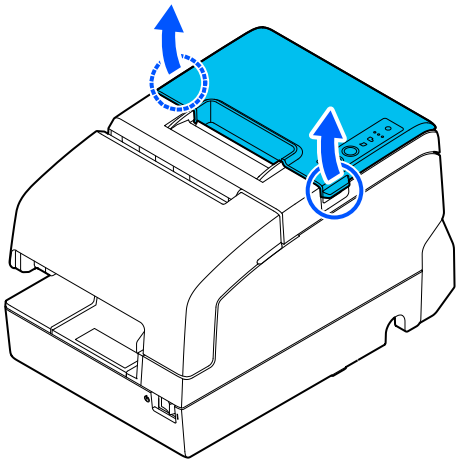

3 **Remove the used roll paper core, if there is one, and insert the roll paper in the correct direction.**

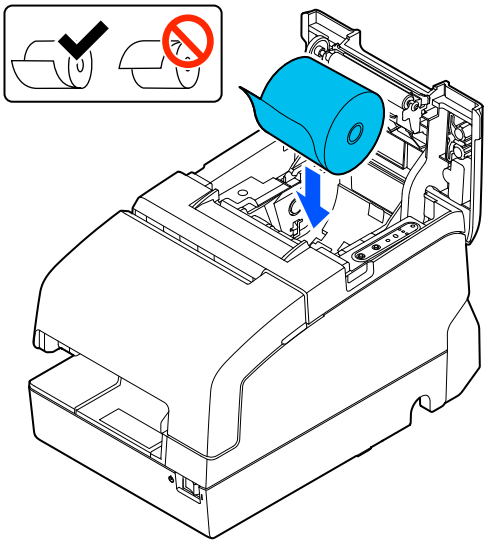

4 **Pull out some paper, and close the roll paper cover.**

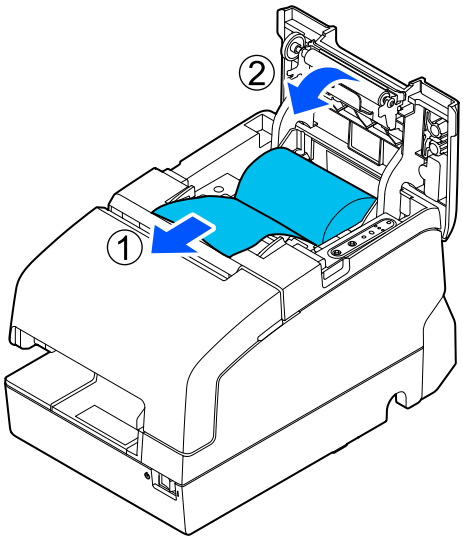

5 **Tear off the paper with the manual cutter.**

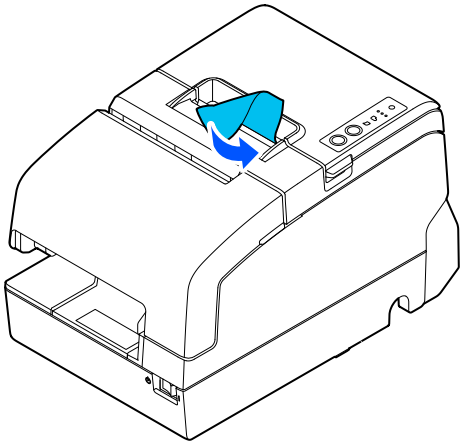

Inserting Slip Paper

CAUTION

Models with an MICR reader use a permanent magnet. Do not bring a magnetic card or the like near the product.

When printing on slip paper, follow the steps below to insert the paper.

If your printer is equipped with a MICR reader, MICR reading is available by inserting the check paper so that the MICR characters on the paper are on the right side.

1 **Make sure the printer is turned on.**

2 **Set the paper so that the right edge of the paper contacts the paper guide on the right and insert the slip paper. Refer to the label affixed to the printer.**

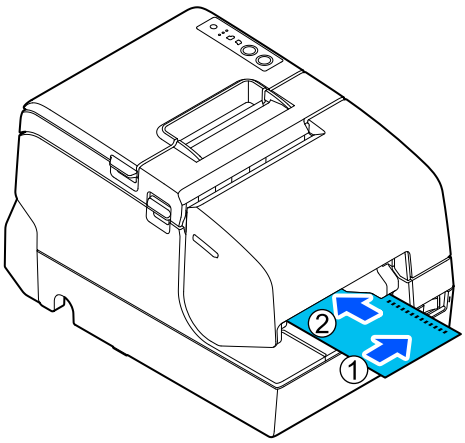

Inserting Validation Paper

When printing on validation paper using validation function, follow the steps below to insert the paper.

1. **Make sure the printer is turned on.**
2. **Insert the paper with the right paper edge against the right side of the paper guide at the printer top, and insert it as far as it will go.**
3. **Insert the paper straight down until the bottom edge of the paper touches the stopper.**

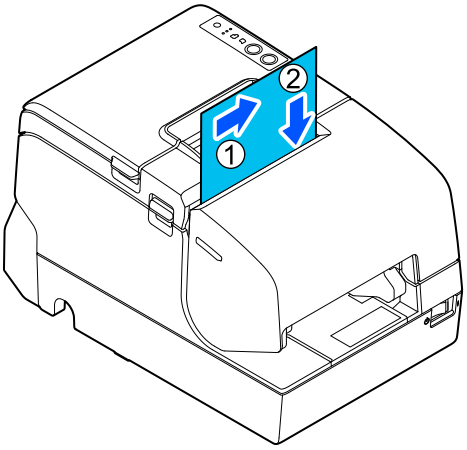

Cleaning the Product

Cleaning the Printer Case

Be sure to turn off the printer, and wipe the dirt off the printer case with a dry cloth or a damp cloth.

CAUTION	Never clean the product with alcohol, benzine, thinner, or other such solvents. Doing so may damage or break the parts made of plastic and rubber.

Cleaning the Thermal Head and the Platen Roller

Epson recommends cleaning the thermal head periodically (generally every 3 months) to maintain receipt print quality.

Depending on the roll paper used, paper dust may stick to the platen roller and the paper may not be fed correctly. To remove the paper dust, clean the platen roller with a cotton swab moistened with water. Turn on the product power only after the water has completely dried.

CAUTION	• The thermal head can be very hot after printing. Be careful not to touch it, and let it cool before you clean it. • Do not damage the thermal head by touching it with your fingers or any hard object.

1 **Turn off the printer.**

2 **Open the roll paper cover.**

3 **Clean the thermal elements of the thermal head (a) with a cotton swab moistened with an alcohol solvent (ethanol or IPA).**

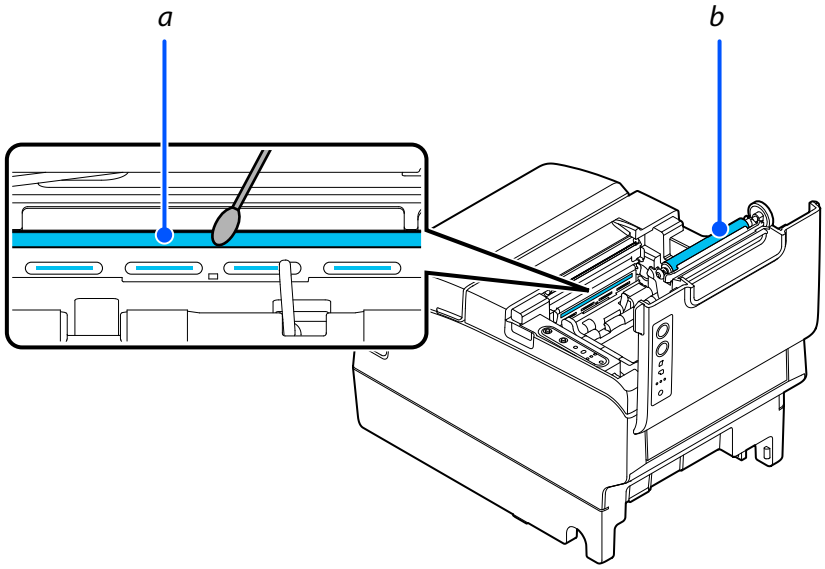

a. Thermal head
b. Platen roller

Cleaning the MICR Head

If your printer is equipped with a MICR reader, when the MICR head becomes dirty, the printer cannot read MICR characters normally.

Approximately every year, clean the MICR head with the following or an equivalent commercially available cleaning sheet: KICTeam, Inc. Products "Waffletechnology® MICR cleaning card".

CAUTION

- Be sure not to use an adhesive cleaning sheet.
- Be sure that the cleaning sheet is inserted with the correct side up and in the correct direction.
- Use a cleaning sheet only one time; then discard it.

1. **Make sure the roll paper is installed correctly and the printer is turned off.**
2. **Open the roll paper cover.**
3. **While holding down the (Release) button, turn the power back on.**
4. **Press the (Release) button 7 times; then close the roll paper cover.**
5. **After the printer prints "*** RECOGNITION MODE *** Please set check." on the roll paper and the (Slip) LED flashes, insert the cleaning sheet like standard slip paper.**
6. **Pull the ejected paper straight up out of the printer.**
7. **Turn off the printer to exit the cleaning mode.**

Preparing for Transport

Follow the steps below to transport the printer.

1. **Turn off the printer.**
2. **Confirm that the Power LED is off.**
3. **Disconnect the AC cable plug from a power outlet.**
4. **Remove the roll paper.**
5. **Pack the printer upright.**

Troubleshooting

This chapter describes the actions to take when a trouble occurs.

If the trouble cannot be resolved, the product will need to be repaired.

- Identify trouble, and take the necessary actions, according to the LED pattern that is displayed.
  See "Status and Errors" on page 21.
  See https://support.epson.net/p_doc/928/

- Identify trouble based on the symptoms, and take the appropriate actions.

Trouble	Reference
Print Quality Problem (Receipt printer)	See page 110.
Paper jam (Roll Paper)	See page 120.
Roll paper cover will not open	See page 123.
Setting slip paper does not start printing	See page 112.
Even when slip paper is set, paper is fed and an error occurs	See page 114.
Slip LED does not turn off even though slip paper is removed	See page 114.
Paper jam	See page 120.
MICR cannot be read	See page 114.
The customer display does not appear	See page 116.
The cash drawer does not open	See page 116.
Printing from the computer is disabled/Printing was suddenly stopped	See page 125.
Power does not turn on	See page 126.

Print Quality Problem

Print Quality Problem (Receipt printer)

Vertical white streaks

Cause	Solution and reference
The head is dirty.	Perform head cleaning. See "Cleaning the Thermal Head and the Platen Roller" on page 106.

Noticeable print shading/White lines are present

Cause	Solution and reference
The print speed fluctuates or intermittent printing occurs due to the conditions of data transmission from the host.	Decrease the print speed so that printing does not stop in the middle of a job and the print speed does not fluctuate. See "Software Settings" on page 66.

The print color is too light

Cause	Solution and reference
The print density is not set correctly.	Decrease the print density setting. See "Software Settings" on page 66.
You are using paper other than the certified paper.	Use the certified paper. See "Paper Specifications" on page 139.

Print Quality Problem (Slip/ Validation/ Endorsement printer)

The paper is dirty

Cause	Solution and reference
The paper is bent or curled.	Use flat paper that is not curled, folded, curved, or wrinkled. Otherwise, the paper could come into contact with the ink ribbon and become dirty.

The print color is too light

Cause	Solution and reference
The ink ribbon color is too light.	Replace the ink ribbon. See "Installing and Replacing the Ribbon Cartridge (ERC-32)" on page 48, "Installing and Replacing the Ribbon Cartridge for Endorsement Printing (ERC-43)" on page 50.
The paper is too thick, or there are too many sheets of copy paper.	Check the paper specifications. See "Paper Specifications" on page 139.

Setting slip paper does not start printing

Check the Slip LED.

Slip LED is flashing continuously

Cause	Solution and reference
The slip paper is set in a incorrect position.	Check whether the slip paper is inserted straight along the paper guide.

Slip LED is flashing 2 times

Cause	Solution and reference
There is still slip paper in the paper path.	Remove the slip paper from the paper path.

Slip LED is flashing 3 times

Cause	Solution and reference
In check insertion standby if the printer is an MICR model.	Insert the check paper

Slip LED is off

Cause	Solution and reference
A Slip printer has not been selected as the print destination.	Check the application and change the paper source to slip paper.

Slip LED does not change from flashing to lit up

Cause	Solution and reference
The sensor does not detect any paper.	Download the Slip Paper Sensor Adjustment Tool (Windows only), and adjust the sensitivity of the Slip paper sensor (A in the illustration). Refer to the "Epson TM-H6000VI Slip Paper Sensor Adjustment Tool User's Manual" for adjustment procedures. 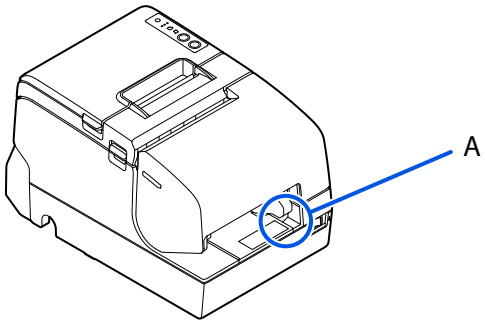

Even when slip paper is set, paper is fed and an error occurs

Cause	Solution and reference
The paper being used does not match the printer driver settings.	Check the printer driver settings.

Slip LED does not turn off even though slip paper is removed

Cause	Solution and reference
There are small pieces of paper in the paper path.	Remove any small pieces of paper that are in the paper path (B in the illustration). There is a sensor that detects paper in the paper path (circled in the illustration). The sensor enclosed by the dotted line is not available on some models.
	Confirm that there are no small pieces of paper remaining in the paper path, and then close all of the covers. If the Slip LED still does not stop flashing, download the Slip Paper Sensor Adjustment Tool (Windows only), and adjust the sensitivity of the Slip paper sensor (A in the illustration).

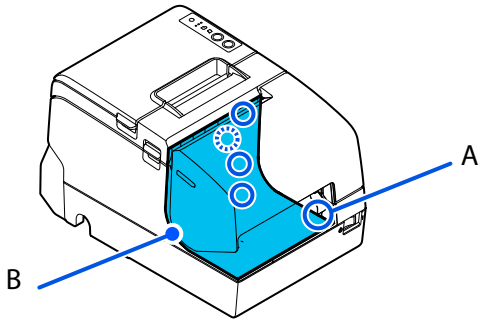

MICR cannot be read

Cause	Solution and reference
The paper insertion position is not correct.	Push the paper fully against the right side.
The paper insertion direction is not correct.	Check the paper direction.
The paper is bent.	Use paper that is not curled, folded, curved, or wrinkled along the edges.

There is a device that emits magnetic fields, such as a display, nearby.	Do not use this product near devices that emit magnetic fields.
The MICR head is dirty.	Perform MICR cleaning. See "Cleaning the MICR Head" on page 107.

The customer display does not appear

Does not appear on the customer display

Cause	Solution and reference
The customer display is not connected.	Check the connection between the customer display and the cable.
DIP switch 2-2 setting is incorrect.	The DIP switch 2-2 setting varies depending on how the customer display is connected (USB or serial). See "Setting the DIP Switches" on page 62.
"DM-D Enabled Interfaces" in the software settings is "Serial I/F Only".	If you are connecting the customer display via USB, configure the setting to "All". See "Software Settings" on page 66.
The printer driver and application settings are not correct.	Check the printer driver and application settings.

Text is garbled

Cause	Solution and reference
The transmission speed is not correct.	Set the display's transmission speed to 19200bps.

The cash drawer does not open

Cause	Solution and reference
The cash drawer is not connected.	Check the connection between the cash drawer and the cable.
The cash drawer specifications and drawer port specifications are not correct.	Use the TM-H6000VI Utility to check operation. At this time, check the pin number of the signal.
	Set the pin number for opening the printer as indicated in the drawer specifications. See "Required specifications of cash drawer" on page 44.
The printer driver and application settings are not correct.	Check the printer driver and application settings.

Auto cutter error

Open the roll paper cover, and check for foreign material. Then, perform error recovery from the system you are using.

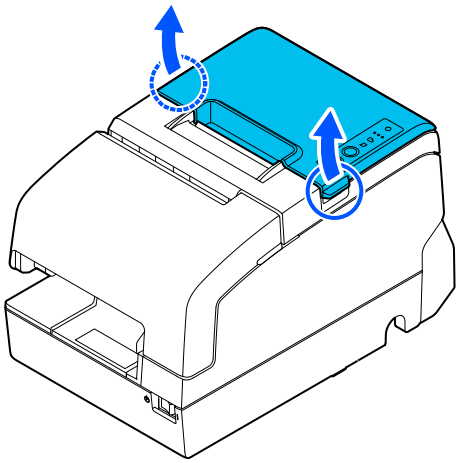

If the roll paper cover will not open, or if the same error occurs even after performing error recovery from the system, use the following procedure to return the cutter blade to its original position, and then perform error recovery.

1 **Open the receipt unit.**

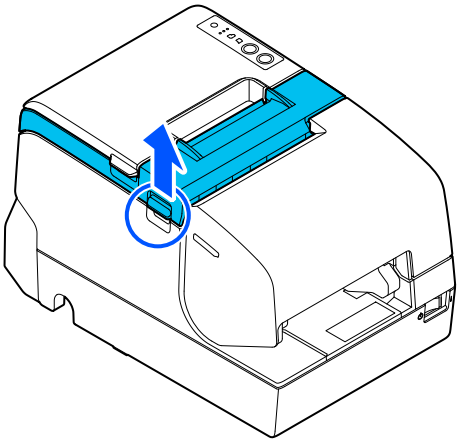

2 **Use an object with a pointed tip such as a ballpoint pen or tweezers to turn the knob (a) of the autocutter blade in the direction of the arrow until you see a pin (b) in the opening of the frame, as shown in illustration below.**

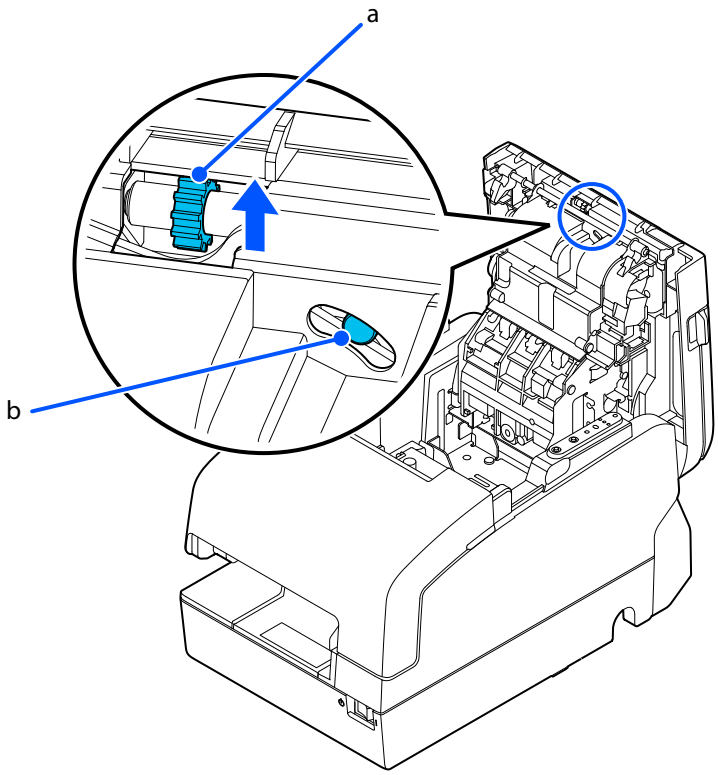

a. Knob
b. Pin

3 **Open the roll paper cover.**

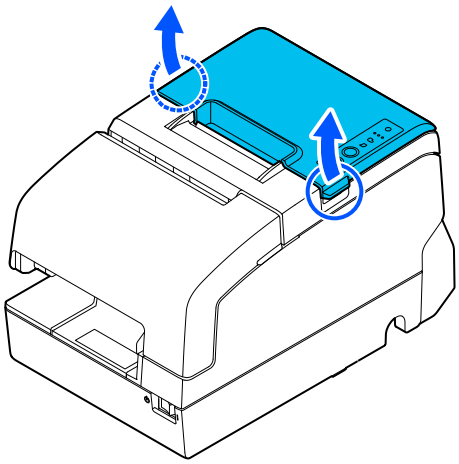

4 **Pull out some paper, and close the roll paper cover.**

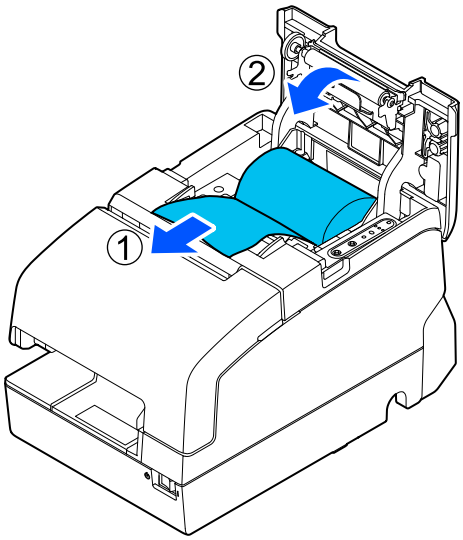

5 **Tear off the paper with the manual cutter.**

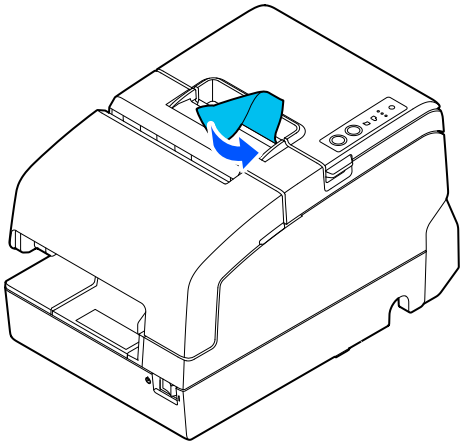

Paper jam

Roll paper is jammed

⚠ **CAUTION**	Do not touch the thermal head, because it can be very hot after printing. Let it cool before you remove the jammed paper.

1 **Open the roll paper cover.**

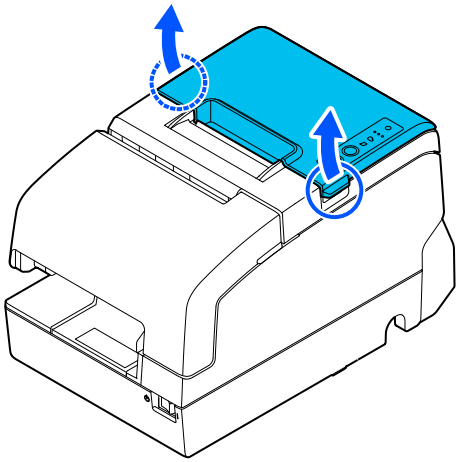

2 **Remove the jammed paper.**

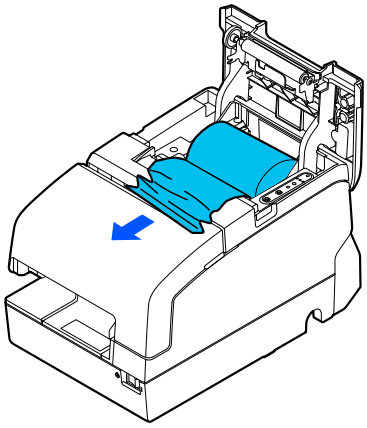

Slip paper is jammed

1 **Open the front cover.**

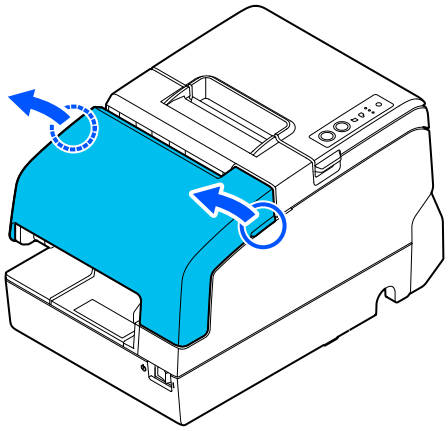

2 **Open the front carriage unit using the lever on the right side of the front carriage unit.**

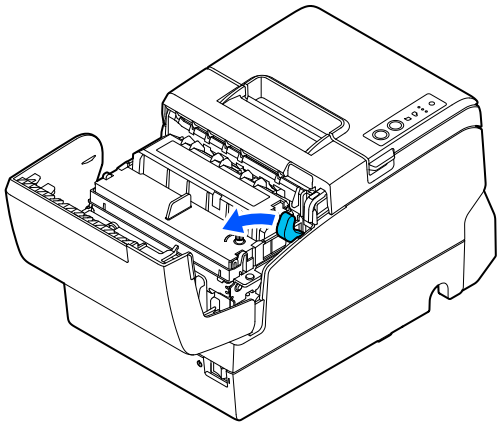

NOTE

When using an endorsement printer, also open the receipt unit.

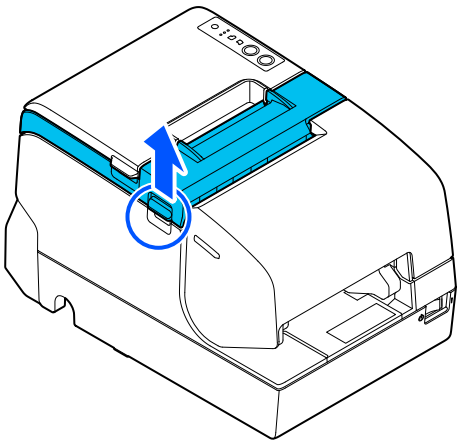

3 **Remove the jammed paper.**

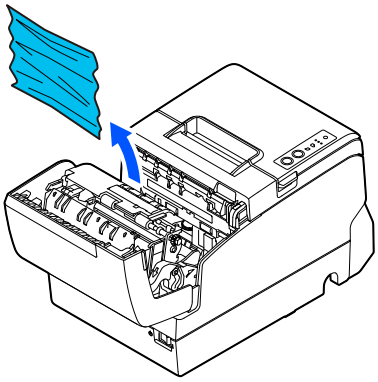

4 **Close the front carriage unit using the lever.**

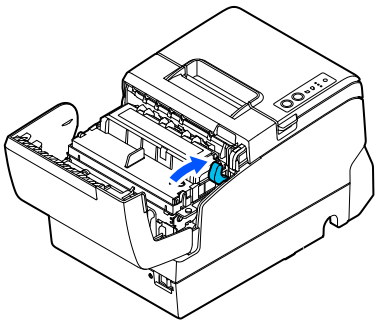

NOTE

When using an endorsement printer, also close the receipt unit.

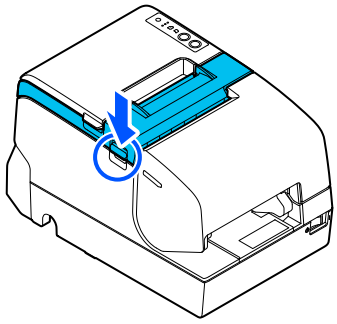

5 **Close the front cover.**

6 **Then, perform error recovery from the system you are using.**

Roll paper cover will not open

When the roll paper cover is locked and will not open, follow the steps below to return the autocutter blade to the normal position to unlock the roll paper cover.

1 **Open the receipt unit.**

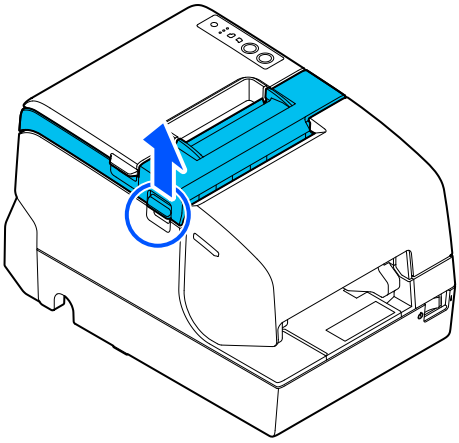

2 **Use an object with a pointed tip such as a ballpoint pen or tweezers to turn the knob (a) of the autocutter blade in the direction of the arrow until you see a pin (b) in the opening of the frame, as shown in illustration below.**

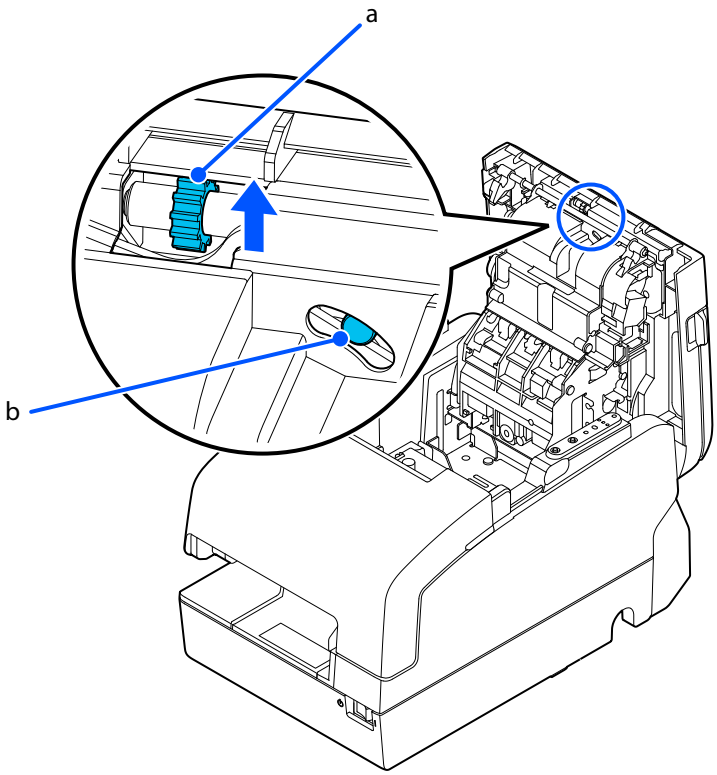

a. Knob
b. Pin

Printing stop by cover open

1 **Pull out some paper, and close the roll paper cover.**

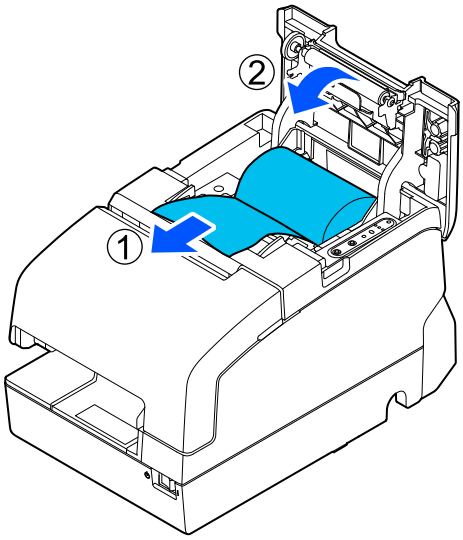

2 **Tear off the paper with the manual cutter.**

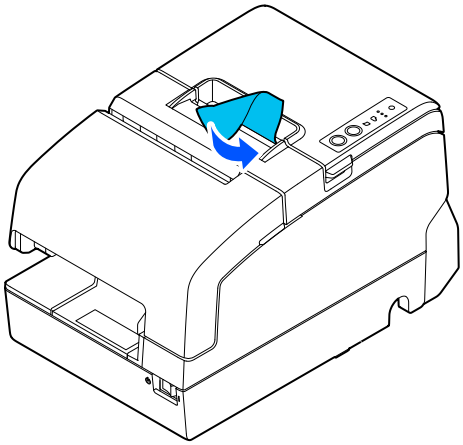

3 **Perform error recovery from the system you are using.**

CAUTION	Do not open the covers during printing or autocutting.

Printing from the computer is disabled/Printing was suddenly stopped

Printer is offline

Remove the cause of going offline.

See "Online and Offline" on page 20.

Reconnect the printer and the computer

1 Check the cable connection.

Check whether the power cable and/or interface cables are properly connected.

2 Reconnect all devices.

- For USB connection
  Disconnect the USB cable and then connect it again.
  When the computer has multiple USB connectors, reconnect the cable to another connector.
- For serial connection
  Disconnect the serial cable and then connect it again.
- For wired LAN
  As operation of a device connected with a wired LAN may be unstable, restart the network.
- For wireless LAN
  Check the connection status of the wireless LAN unit.

LAN setting

Print a status sheet and check that the settings are correct.

- Correct the settings if not correct.
- Initialize the network settings and specify the settings again.

Check installation of printer driver

Check whether the required software and applications are installed on the computer.

For details about how to check installation of printer driver, refer to the manual for each printer driver.

Power does not turn on

Check whether the power cable and AC adapter are properly connected to the printer and power outlet.

Replacement of the TM-H6000V

The TM-H6000VI is designed so that it can smoothly replace the TM-H6000V. This chapter describes precautions for the replacement.

	TM-H6000VI	TM-H6000V
Receipt print speed	500 mm/s {19.69 in/s}	350 mm/s {13.78 in/s}
Autocutter	Partial cut (cutting with one point in left edge left uncut)	Partial cut (cutting with one point in left edge left uncut)
Reliability	<Receipt printing> Print head 200 km Autocutter 3,000,000 cuts Certified paper type TF50KS-EY, PD160R, KT55FA	<Receipt printing> Print head 200 km Autocutter 3,000,000 cuts Certified paper type TF50KS-EY, PD160R, KT55FA
Ethernet interface	Included	Included
Wi-Fi interface	Supported by option (OT-WL06)	Supported by option (OT-WL02, OT-WL05, OT-WL06)
Bluetooth interface	Supported by option	Supported by option
NFC	Included *May not be equipped depending on the printer model.	Included
RTC	Included	Included
Status sheet	Corresponded	Corresponded
Multiple interface	Corresponded	Corresponded
TM-Intelligent	Corresponded	Corresponded
Case color	2 colors	2 colors
Option	TA-6000II: Printer attachment OT-DC6000: Cover for protecting the wireless LAN unit OT-WL06: Wireless LAN cable set DM-D110, DM-D210, DM-D30, DM-D70: Customer display BT820 Beacon module	PG-58II: 58 mm {2.28 in} width paper guide TA-6000II: Printer attachment OT-DC6000: Cover for protecting the wireless LAN unit OT-WL02, OT-WL05, OT-WL06: Wireless LAN cable set DM-D110, DM-D210: Customer display DP-502: Dedicated stand for customer display BT820 Beacon module

Compatibility

Printing

The printing and character specifications are the same as those of the TM-H6000V. Without special configurations, the TM-H6000VI prints the same results as the TM-H6000V prints.

Print Density

Print density of the TM-H6000VI is set in the same way as for the TM-H6000V by using the software setting mode or by using DIP switches 2-3 and 2-4. You can set the same print density by specifying the same settings as the TM-H6000V.

Printable Area

The printable area (left/right margins, print start position from the autocutting position, print start position from the manual cutting position) of the TM-H6000VI is the same as that of the TM-H6000V.

Cutting Method

The TM-H6000VI uses the partial cutting method (cutting with one point in left edge left uncut) as does the TM-H6000V.

Receive Buffer

The TM-H6000V receive buffer can be set to 4 KB or 45 bytes in Software Setting Mode or with DIP switch 1-2.

The TM-H6000VI receive buffer is fixed at 4 KB. The conditions for a full buffer are the same as when the TM-H6000V receive buffer is set to 4 KB and DIP switch 2-5 is set to OFF.

Memory Capacity

The sizes of the download buffer and NV graphics data of the TM-H6000VI are the same as those of the TM-H6000V.

Electrical Characteristics

The operating voltage of the TM-H6000VI is DC 24 V±7%, the same as the TM-H6000V. The current consumption differs, depending on the print duty. When you set the print speed to 500 mm/s {19.69 in/s}, the amount of electricity consumed increases.

DIP Switches

The functional assignments of DIP switches for the TM-H6000VI differ from the TM-H6000V. See "Setting the DIP Switches" on page 62 for more details.

Printer Status

The TM-H6000VI goes to the same status under the same conditions as the TM-H6000V. You can replace the TM-H6000V with the TM-H6000VI without modifying applications.

Logo Registration

Register logos in the NV memory (NVRAM) of the TM-H6000VI by using the setting utility.

If logo data registered for the TM-H6000V has been saved in a computer, you can register the same data in the TM-H6000VI.

Driver Compatibility

The printer drivers for TM-H6000VI and TM-H6000V are different.

USB Low Power Consumption Mode

With the TM-H6000VI, you can enable the USB low power consumption mode in the software setting mode.

Maintenance Counter

The TM-H6000VI has a maintenance counter just as the TM-H6000V has.

Overall Dimensions

TM-H6000VI W:186 × D:278 × H:181 mm Approximately. 4.4kg {W:7.32 in × D:10.94 in × H:7.13 in Approximately. 9.70 lb}	TM-H6000V W:186 × D:278 × H:181 mm Approximately. 4.4kg {W:7.32 in × D:10.94 in × H:7.13 in Approximately. 9.70 lb}
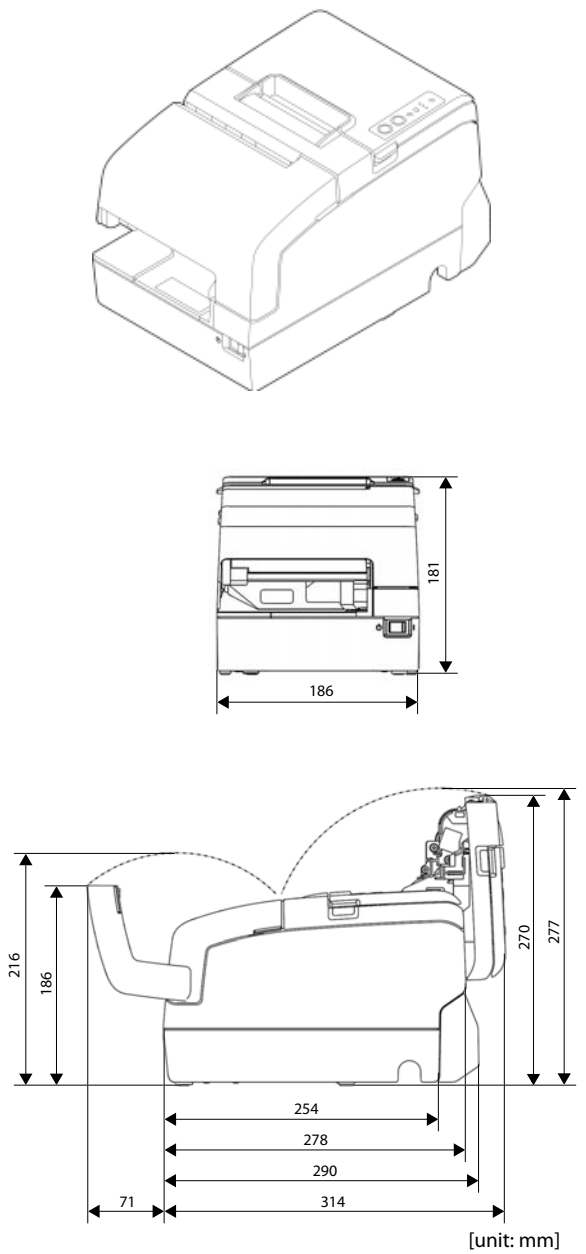	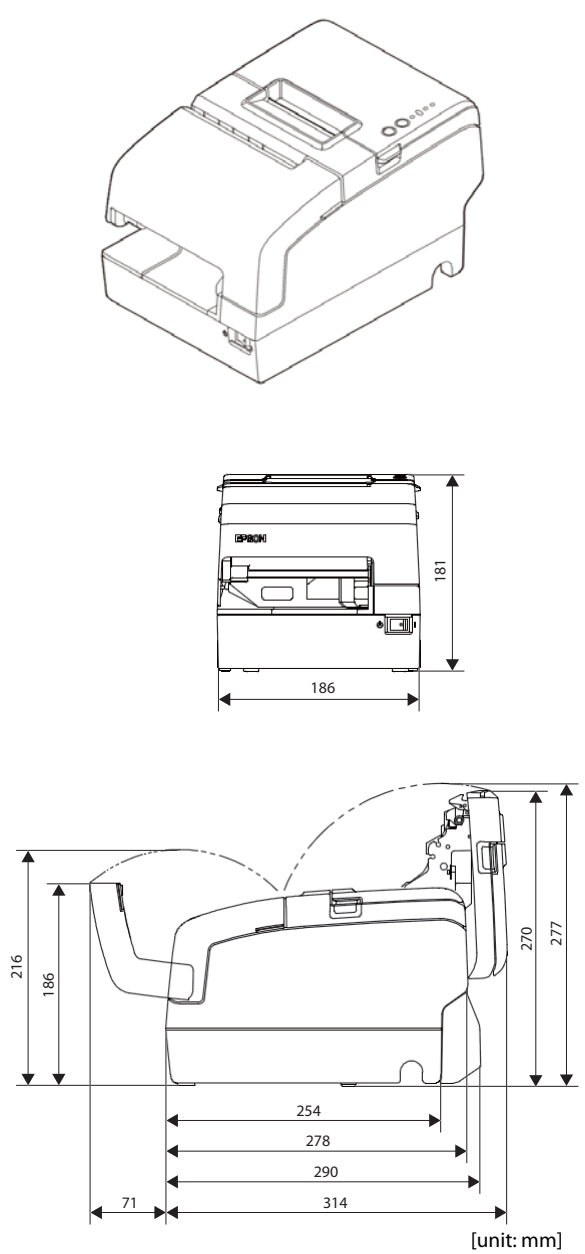

7

Additional Functions and Functional Improvements

Print Speed

	TM-H6000VI	TM-H6000V
Default	up to 400 or 450 mm/s {15.75 or 17.72 in/s}	up to 300 or 350 mm/s {11.81 or 13.78 in/s}
Maximum print speed	up to 500 mm/s {19.69 in/s}	up to 350 mm/s {13.78 in/s} *
Print speed setting (Customized value)	levels 1 to 17	levels 1 to 14

* The values are those when the paper width is set to 80 mm {3.15 in}. When it is set to 58 mm {2.28 in}, the maximum is 300 mm/s {11.81 in/s}.

CAUTION

Depending on print conditions such as print duty, print head temperature, and data transmission speed, print speed is automatically adjusted.

SimpleAP Function

The TM-H6000VI comes with a mode (SimpleAP) that allows the printer to connect directly when using an optional wireless LAN unit without having to use a wireless LAN access point.

The wireless LAN setting can be set using Web Config other than the TM-H6000VI Utility.

CAUTION

The SimpleAP function is for making settings only.

NFC*

The TM-H6000VI is equipped with a built-in NFC tag.

* May not be equipped depending on the printer model.

Software Settings

For the TM-H6000VI, the following software setting functions are added.

- Print Speed
- Font Priority
- Interface switch waiting time
- Printer Model

TM-Intelligent function

The TM-H6000VI supports the following TM-Intelligent function.

- Supports Server Direct Print that sends a request for print data from the product to the Web server at regular intervals.

Appendix

Product Specifications

Printing method	Receipt	Thermal line
	Slip/Endorsement *1	9-pin serial impact dot matrix
Cutting method for receipt		Partial cut (cutting with one point in left edge left uncut)
MICR reader *1		Permanent magnet
Paper dimensions	Receipt	79.5±0.5 × 83 mm {3.1±0.02 × 3.3 in.}
	Slip	68 to 230 × 68 to 297 mm {2.7 to 9.1 × 2.7 to 11.7 in.} (W × L) Minimum size: 68 × 152 mm {2.68 × 5.98 in.}
Interfaces	USB Type-A	x 1 Supplies up to 0.5 A, USB 2.0 High-Speed
	USB Type-B	× 1 USB 2.0, Full-speed (12 Mbps)
	Ethernet	× 1 10BASE-T/100BASE-TX
	Wireless LAN	IEEE802.11a/b/g/n/ac (2.4 GHz or 5 GHz) Connect the optional wireless LAN unit to the USB Type-A connector.
	Serial *2	× 1 RS-232
	USB PlusPower *2	× 1 Full-speed (12 Mbps)
	DM-D	× 1 Connect the customer display
	Drawer kick	× 1 Connect the cash drawer
Buffers	Receive buffer	4 KB
	Downloaded buffer	12 KB
	NV graphics data	384 KB
	Downloaded graphics area	208 KB
	User NV memory	1 KB
Barcode *3		UPC-A, UPC-E, JAN8 / EAN 8, JAN13 / EAN13, Code39, Code93, Code128, Code128 auto, ITF, CODABAR (NW-7), GS1-128, GS1 DataBar Omnidirectional, GS1 DataBar Truncated, GS1 DataBar Limited, GS1 DataBar Expanded

Two-dimensional symbol/ Composite symbol printing *4		PDF417, MaxiCode, Data Matrix, Aztec Code, GS1 DataBar, Composite Symbology
Inked ribbon	Slip	ERC-32
	Endorsement *1	ERC-43
Supplied voltage *5		DC 24 V±7%
Current consumption		Mean: Approximately. 1.8 A
AC power consumption *6 (100 to 230 V, 50 to 60 Hz)		Operating: Approximately. 26.6 W Standby: Approximately. 1.0 W
Temperature/humidity		Operating: 5 to 45°C {41 to 113°F} Storage: -10 to 50°C {14 to 122°F}, except for paper
Humidity		Operating: 10 to 90% RH Storage: 10 to 90% RH, except for paper
Air pressure (Altitude)		726 hPa (Approximately. 3000 m {3280.84 yards} above sea level) or less
Overall dimensions		181 × 186 × 278 mm {7.13 × 7.32 × 10.94 in} (H × W × D)
Mass		Approximately. 4.4 kg {9.7 lb} (paper excluded)

* 1: Factory installed options.
* 2: The available interfaces vary by the printer model.
* 3: Only picket fence bar codes are supported if using a slip printer.
* 4: Cannot be printed by using the slip printer.
* 5: Be sure to use a safety-standards-applied power source that meets the following specifications.
  Rated output: 24 V/1.8–10.0 A, Maximum output: 240 VA or less
* 6: This is the average power under our operation conditions. It varies depending on the conditions of use and the model.

Printing Specifications

Slip printing

Printing method		Serial impact dot matrix
Head wire configuration		9-pin vertical line, wire pitch approximately 0.353 mm {0.014 in}
Printing direction		Bidirectional, minimum distance printing
Printing speed *	Front	Approximately. 5.7 lps (printing 40 columns per line with 17.8 cpi)
	Endorsement	Approximately. 4.0 lps (printing 40 columns per line with 21.2 cpi)
Characters per line	Front	Font A (initial setting): 45 Font B: 60 Multi-byte character font: 30
	Endorsement	Font A: 25 Font B: 33 Endorsement font (initial setting): 40
Character dot spacing	Front	Font A (initial setting): 1 dot Font B: 2 half dots Multi-byte character font: 2 dots
	Endorsement	Font A: 1 dot Font B: 2 half dots Endorsement font: 1 dot

lps: lines per second

cpi: characters per inch

* when the head energizing time is set to normal mode.

NOTE

- Printing speed may be slower, depending on such items as the data transmission speed.
- ANK models do not support the multi-byte characters.

Receipt printing

Printing method	Thermal line printing
Dot density	180 × 180 dpi
Printing direction	Unidirectional with friction feed
Maximum print speed *	500 mm/s {19.69 in/s} (at DC 24 V, 25 °C, Print density 100%)
Printing width	72.0 mm {2.83 in}, 512 dots
Characters per line	Font A (initial setting): 42 (46 in 46-column mode) Font B: 56 Font C: 51 Multi-byte character font: 21
Feeding pitch	0.1411 mm {0.0056 in}
Paper feed speed	Approximately. 200 mm/s {7.87 in/s} (continuous paper feeding with the Feed button)
Line spacing	Approximately. 4.23 mm {1/6 in}

∗ Text printing (built-in fonts), page mode, and monochrome graphics printing.

NOTE

- The print speed changes automatically depending on the voltage applied to the printer and the condition of the head temperature.
- Maximum print speed may not be achieved depending on the type of interface, data transmission conditions and combination of commands.
- If the print speed fluctuates or intermittent printing occurs due to the data transmission conditions, printing may be shaded or white lines may occur.
- Low transmission speed may cause intermittent printing, especially when using a serial interface. It is recommended to transmit data to the printer as quickly as possible.
- The following conditions specify the maximum print speed regardless of the print density and paper width settings.
  - ∗ The maximum is 100 mm/s {3.94 in/s} when printing ladder barcodes or two-dimensional symbols.
  - ∗ The maximum is 400 mm/s {15.75 in/s} when printing fence barcodes.
  - ∗ The maximum is 150 mm/s {5.91 in/s} when printing multi-tone graphics (NV download graphics).
  - ∗ The maximum is 70 mm/s {2.76 in/s} when printing multi-tone graphics (raster graphics).
- ANK models do not support the multi-byte characters.

Character Specifications

Slip printing

Number of characters		Alphanumeric characters: 95 Extended graphics: 128 × 12 pages (including user-defined page) International characters: 14 character types GB18030-2022*: 28,806 (Lv.2) (for Simplified Chinese characters model) Big5: 13,502 (for Traditional Chinese characters model) * GB2312 can be changed using the TM-H6000VI Utility. For details on TM-H6000VI Utility, refer to TM-H6000VI Utility User's Manual.
Character structure (W x H dots)	Font A	5 × 9 dots (including 1-dot horizontal spacing)
	Font B	7 × 9 dots (including 2-half dot horizontal spacing)
	Endorsement font	5 × 7 dots (including 1-dot horizontal spacing)
	Multi-byte character font	16 × 16 dots (including 2-dot horizontal spacing)
Character size (W x H)	Font A	1.56 × 3.11 mm {0.06 x 0.12 in}
	Font B	1.24 × 3.11 mm {0.05 x 0.12 in}
	Endorsement font	1.09 × 2.41 mm {0.04 x 0.09 in}
	Multi-byte character font	2.67 × 2.94 mm {0.11 x 0.12 in}

Receipt printing

Number of characters		Alphanumeric characters: 95 Extended graphics: 128 × 12 pages (including user-defined page) International characters: 14 character types GB18030-2022*: 28,806 (Lv.2) (for Simplified Chinese characters model) Big5: 13,502 (for Traditional Chinese characters model) * GB2312 can be changed using the TM-H6000VI Utility. For details on TM-H6000VI Utility, refer to TM-H6000VI Utility User's Manual.
Character structure (W x H dots)	Font A	12 × 24 dots (including 2-dot horizontal spacing) 11 × 24 dots (including 1-dot horizontal spacing) (46-column mode)
	Font B	9 × 17 dots (including 2-dot horizontal spacing)
	Font C	10 × 20 dots (including 1-dot horizontal spacing)
	Multi-byte character font	24 × 24 dots (horizontal spacing: 0 dot)

Character size (W x H)	Font A	1.41 × 3.39 mm {0.06 x 0.13 in}
	Font B	0.99 × 2.40 mm {0.04 x 0.09 in}
	Font C	1.27 × 2.82 mm {0.05 x 0.11 in}
	Multi-byte character font	3.39 × 3.39 mm {0.13 x 0.13 in}

NOTE

- Space between characters is not included in the character size.
- Characters can be scaled up to 64 times as large as the standard size.
- ANK models do not support the multi-byte characters.
- In slip printing, the character structuring is performed with half a dot for Font B and Multi-byte character font.

Paper Specifications

Slip printing

Types		Normal paper, pressure sensitive paper, carbon copy paper
Form		Slip paper
Size (W × L)		68 to 230 mm × 68 to 297 mm {2.68 to 9.06 in × 2.68 to 11.69 in} The minimum size is 68 × 152 mm {2.68 × 5.98 in}.
Thickness	Normal paper (single-ply)	0.09 to 0.22 mm {0.0035 to 0.0087 in}
	Copy paper (front)	Backing paper: 0.07 to 0.12 mm {0.0028 to 0.0047 in} Copy paper, original paper: 0.04 to 0.07 mm {0.0016 to 0.0028 in} Carbon copy paper: Approximately. 0.035 mm {0.0014 in} Total thickness: 0.09 to 0.47 mm {0.0035 to 0.0185 in}
	Copy paper (endorsement)	Backing paper: 0.07 to 0.12 mm {0.0028 to 0.0047 in} Copy paper, original paper: 0.04 to 0.07 mm {0.0016 to 0.0028 in} Copy carbon paper: Approximately. 0.035 mm {0.0014 in} Total thickness: 0.09 to 0.31 mm {0.0035 to 0.0122 in}

CAUTION

- Copy capability is greatly influenced by the ambient temperature, so printing must be performed under the conditions described below.

	Number of copies	Total thickness	Ambient temperature
Copy paper (front)	original + 3 copies	0.31 mm {0.012 in} or less	10 to 40°C {50 to 104°F}
	original + 2 copies	0.31 mm {0.012 in} or less	5 to 45°C {41 to 113°F}
	original + 2 copies	0.47 mm {0.019 in} or less	10 to 40°C {50 to 104°F}
Copy paper (endorsement)	original + 2 copies	0.31 mm {0.012 in} or less	10 to 40°C {50 to 104°F}

- The slip paper must be flat and without curls, folds (especially curls or folds at the top edges), curves, or wrinkles. Otherwise, it may rub against the ink ribbon and become dirty.
- The slip holding roller may make marks on the copy paper.
- Print position may shift for the top and bottom sheets of multi-ply paper; therefore, when formatting slip paper, take this into account.
- Use thinner paper (N30 or equivalent) between the top and bottom sheets of multi-ply paper. If thick paper is used, the copy capability is lowered.
- The slip paper must be flat, without curls or wrinkles, especially at the top edges.

CAUTION

- Choose slip paper carefully when using slip paper with glued area, since printing, paper feeding, and insertion are affected by gluing conditions (e.g. quality, method, and length of glue) and glue location.
  Be especially careful when slip paper is wide and has the glue on the left edge, since drifting may occur.

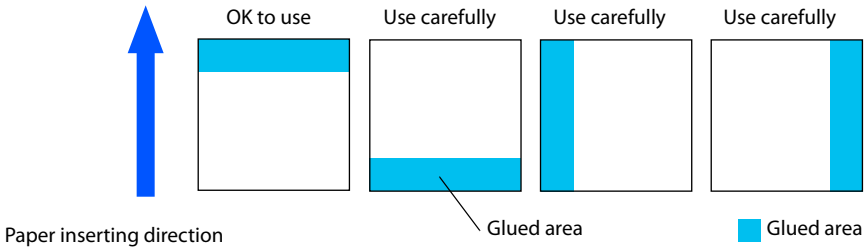

- Use thinner paper (N30 or equivalent) between the top and bottom sheets of multi-ply paper. If thick paper is used, the copy capability is lowered.
- Do not use paper that has holes, or is translucent at the BOF sensor position.
- Do not use paper that has holes or dark positions with low reflection (less than 40% reflection) on the front at the TOF sensor position.

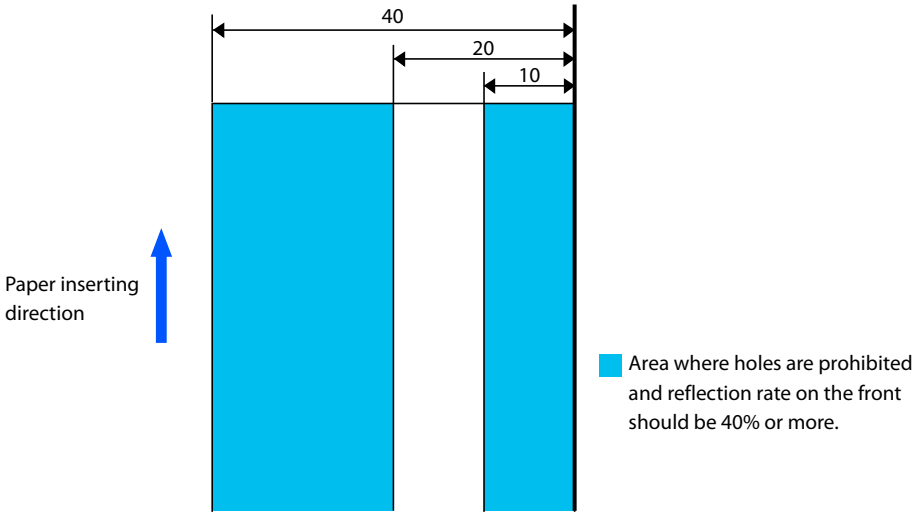

[units: mm (All the numeric values are typical.)]

Do not use paper that has holes or dark positions with low reflection (less than 40% reflection) on the back at the validation sensor (only for the validation models).

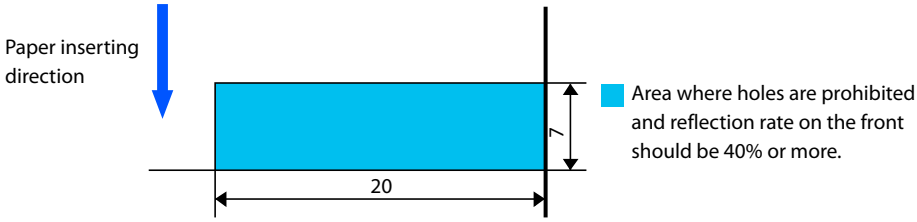

[units: mm (All the numeric values are typical.)]

Receipt printing

Type		Thermal paper
Form		Roll paper
Size	Roll paper diameter	83 mm {3.27 in} maximum
	Roll paper spool	Inside: 12 mm {0.47 in}, Outside: 18 mm {0.71 in}
	Roll paper core width	Same as the roll paper width, or smaller than the paper width by 1 mm {0.04 in} or less.
	Roll width when taken up	80+0.5/-1.0 mm {3.1+0.02/-0.039 in}
	Paper width	79.5±0.5 mm {3.12±0.02 in}
Certified paper type		TF50KS-EY, TF60KS-E, TP48KR-NPY, TP48KR-Y, PD160R, PD190R, P220AGB-1, JujoP-KSND-48, JujoP-KSND-55, P5047(55), P5047(46), KT55FA, KT48FA, KT55PF, KT48PF
Paper thickness		Maximum of 80 µm, minimum of 48 µm

CAUTION

- Paper must not be pasted to the roll paper spool.
  For the best print quality for each paper type, it is recommended to test the print density.
  (See "Software Settings" on page 66.)

Print density adjustment depending on the certified paper

- In order to ensure optimal print quality and reliability, we recommend using the print density settings in the table below. The print density can be changed by using the DIP switches and customized values.

  Certified paper and recommended print density setting (DIP switches)

Certified paper	Print density
TF50KS-EY, TF60KS-E, TP48KR-NPY, TP48KR-Y, PD160R, PD190R, P220AGB-1, JujoP-KSND-48, JujoP-KSND-55, KT55FA, KT48FA, KT55PF	Standard
KT48PF, P5047(55) , P5047(46)	Medium

  Certified paper and recommended print density setting (customized values)

Certified paper	Print density	Print speed
KT48FA, KT55PF	7 (100%)	15 (400 mm/s {15.75 in/s})
JujoP-KSND-48, KT55FA	7 (100%)	16 (450 mm/s {17.72 in/s})
TF50KS-EY, TF60KS-E, TP48KR-NPY, TP48KR-Y, PD160R, PD190R, P220AGB-1, JujoP-KSND-55	7 (100%)	17 (500 mm/s {19.69 in/s})
KT48PF, 5047(55)	8 (105%)	15 (400 mm/s {15.75 in/s})

- The initial setting is 100% print density.
- If setting the speed to 500 mm/s {19.69 in/s}, use a customized value to set the print density to the recommended setting.
- When the print density setting is too dark, the print speed tends to drop. If the print density is 115% or higher, and the room temperature is 15°C {59°F} or lower, the speed will be 240 mm/s {9.45 in/s} or slower.
- When the print density setting is too dark, paper dust sticks to the print head surface, often resulting in faded print.

Notes on preprinting

- Preprinted thermal paper may cause faulty printing and decreased print density due to the thermal head sticking to the recording surface. Therefore, it is preferable to avoid using preprinted thermal paper.
- If using preprinted thermal paper, make sure in advance that the conditions recommended by the certified paper manufacturing company (type of ink, print conditions, etc.) are met, and that there is no faulty printing or decreased print density in the actual usage environment.

Printable Area

Slip (front) printing

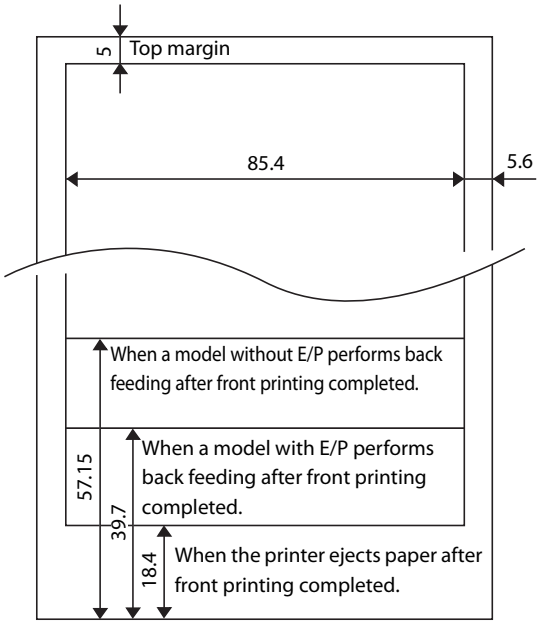

[units: mm (All the numeric values are typical.)]

Slip (endorsement) printing

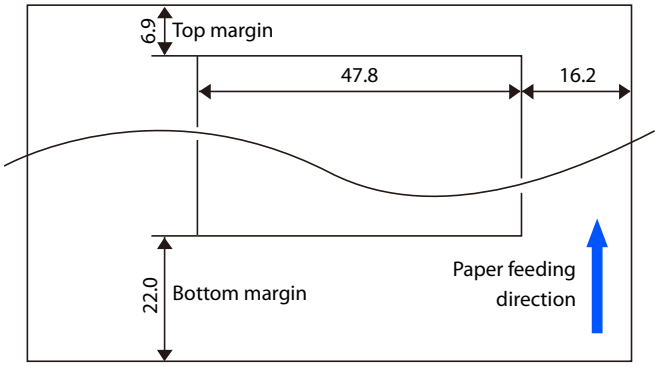

[units: mm (All the numeric values are typical.)]

Slip (validation) printing

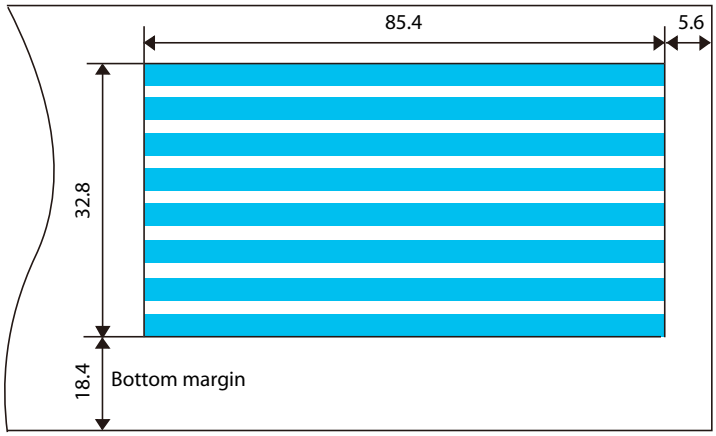

[units: mm (All the numeric values are typical.)]

Receipt printing

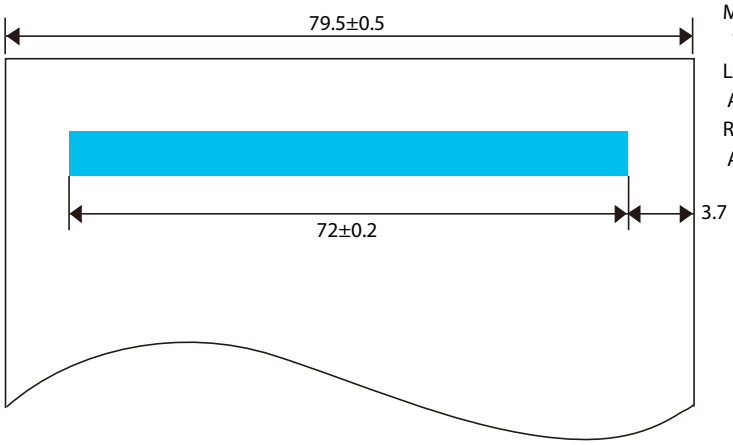

Maximum printable area
72±0.2 mm {2.83±0.008}
Left margin
Approximately. 3.7 mm {0.15 in}
Right margin
Approximately. 3.7 mm {0.15 in}

[units: mm (All the numeric values are typical.)]

Printing and Cutting Positions

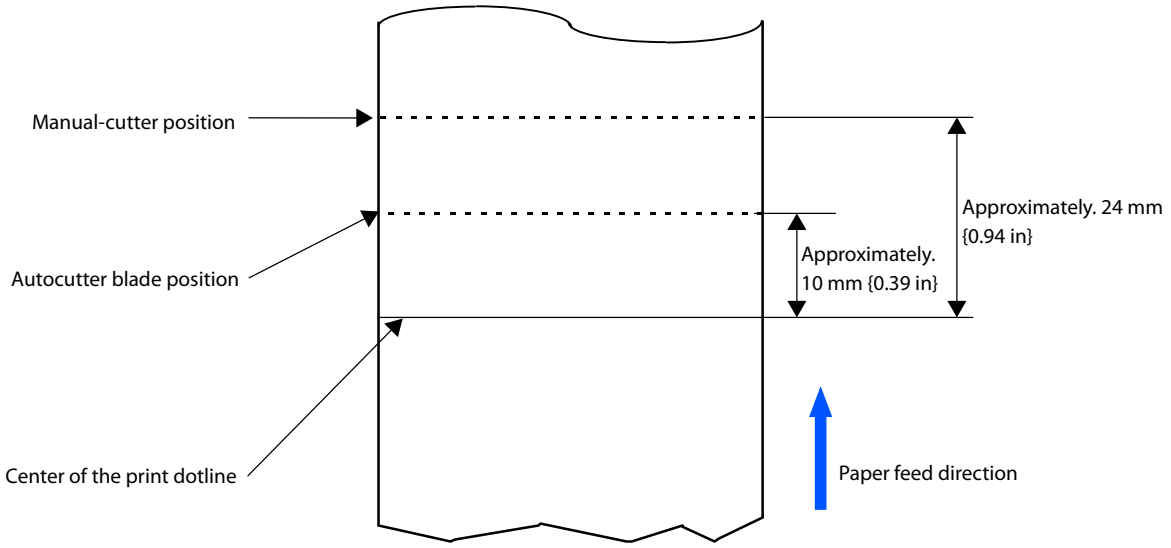

[units: mm (All the numeric values are typical.)]

CAUTION

- The values above may vary slightly as a result of paper slack or variations in the paper.
- Take this into account when setting the cutting position of the autocutter.

NOTE

- The cut paper may be pulled at the cut edge when it is removed, causing reduced printing pitch for the first line of the next receipt. To prevent dot displacement, after cutting, feed the paper approximately 1 mm {0.039 in} or more before the first line of printing.
- A paper jam may occur inside the autocutter if the printer is left unused for a long time with paper left loaded in the printer. When operating the autocutter after leaving the printer unused for a long time, feed paper of 30 mm {1.18 in} or longer before operating the autocutter to prevent paper jams.

Ribbon Cassette

Model		Slip printing (front): ERC-32 Endorsement printing: ERC-43
Color		Black
Life *	ERC-32	4,000,000 characters
	ERC-43	3,000,000 characters

* at 25°C {77°F} with continuous printing

Notes on using the endorsement printer

You can use an endorsement printer to perform MICR reading and endorsement printing without turning over the check. For this reason, be careful of the following points regarding the endorsement printer when developing an application.

- When endorsement printing is executed after MICR reading, the printer automatically feeds the paper forward after receiving a command to print the endorsement. Next, the printer starts printing from the print starting position (approximately 6.9 mm {0.27 in} from the end of the check) by using reverse paper feeding.
- Since the endorsement printing format assumes a sequence appropriate for printing of an endorsement on a US personal check, printing begins at the far end from the inserted side of the check with the print turned upright. (The endorsement characters are printed upside-down as viewed from the front of the printer.)
- In some cases paper feeding may not be accurate when endorsement printing is performed on a check depending on the width of the check. We recommended that you check in advance whether printing is performed correctly on the check you want to use.

MICR Reader (Factory-Installed Option)

Reading method	Magnetic bias
Supported fonts	E13B, CMC7 (Alphabets are not supported.)
Recognition rate*	Recognition rate: 99% or more Recognition error rate: 0.1% or less

* When using ANSI/ISO specified paper at 25°C {77°F}
Recognition rate (%) =
{Total number of checks-(number of checks misread or not recognized)}/Total number of checks × 100

Inserting direction and endorsement/face printing

- Securely insert the check with the surface printed with magnetic ink facing upward along the slip side guide.
- The printer can perform check reading followed by endorsement/face printing.

Area of MICR Recognition

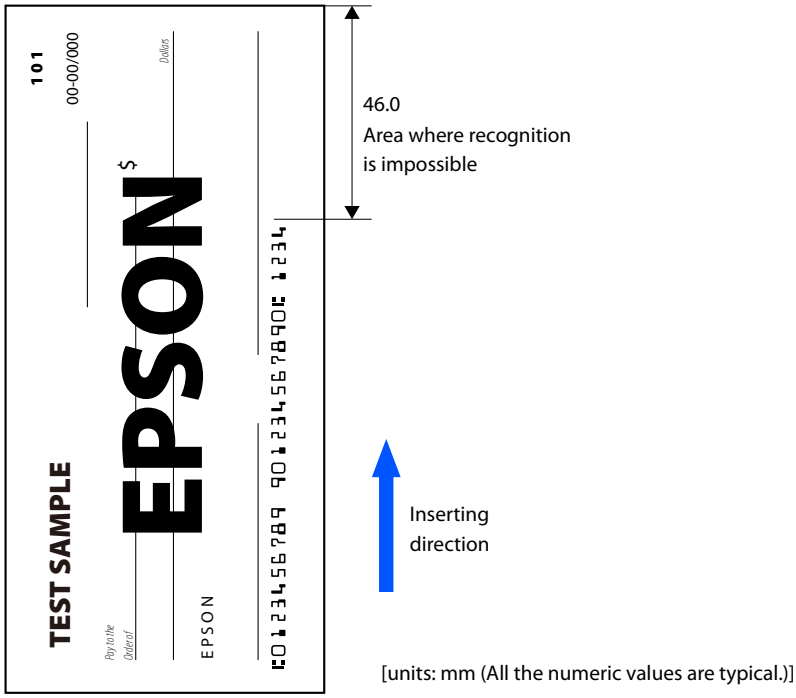

[units: mm (All the numeric values are typical.)]

Area Specified for Endorsement

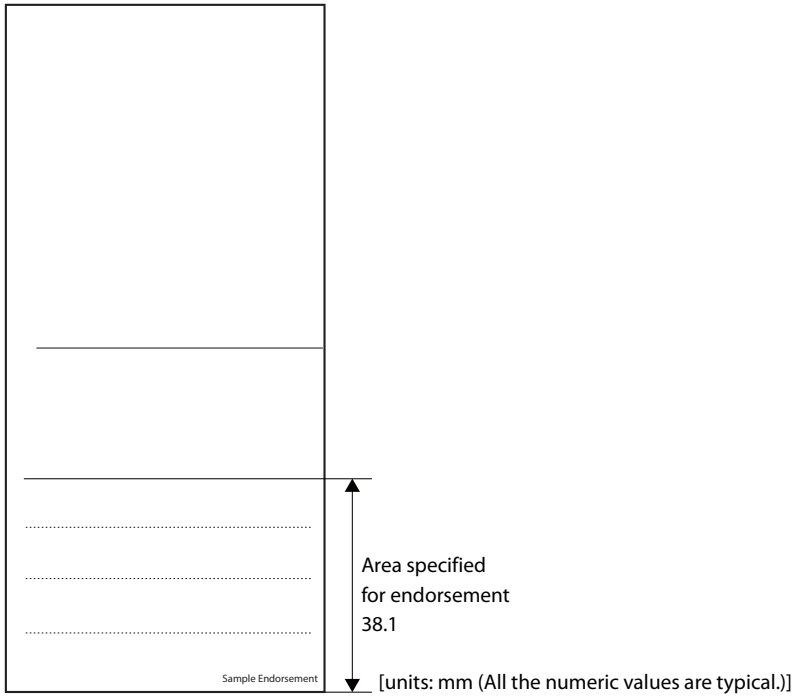

[units: mm (All the numeric values are typical.)]

NOTE	In order to assuredly print on the area specified for endorsement (within 38.1 mm {1.5 in} from the edge), use settings that provide approximately 3 mm {0.12 in} of space at the bottom of the print specified area.

Notes on using the MICR reader

- For MICR reading, the minimum length of paper is 120 mm {4.72 in}.
- The check paper must be flat and without curls, folds (especially curls or folds at the top edges), curves, or wrinkles. Otherwise, it may rub against the ink ribbon and become dirty.
- Do not insert checks that have clips, staples, or similar foreign material attached. This may cause paper jams, MICR reading errors, or damage to the MICR head.
- Let go of the check immediately as soon as the printer starts feeding it. Not letting go of the check can cause it to be fed at an angle, resulting in meandering, paper jams or MICR reading errors.
- The MICR characters may not be recognized if the printer is subject to impact or vibration.
- If the printer is installed near any magnetic fields, to prevent false recognition of the MICR caused by the magnetic fields, MICR reading operation may stop and MICR reading errors may occur. In such cases, install the printer away from the devices, or install materials that can prevent electromagnetic waves, such as a steel plate or shielding material, between the printer and electric equipment in order to decrease the negative effects of electromagnetic waves from electronic devices and so that the MICR can operate normally. (Be especially sure to check the MICR recognition rate when the printer is used near a display device.)

Barcode/ Two-dimensional symbol/composite symbol

Barcode/two-dimensional symbol Print Direction

Barcode/two-dimensional symbol print direction and name are as follows.

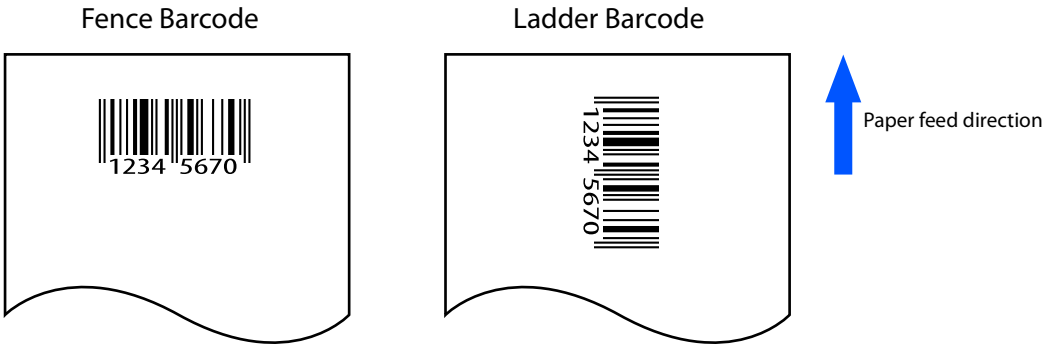

Notes on using the multi-tone graphics printing

Multi-tone graphics printing is available on receipts.

- Multi-tone printing is not supported in Page mode.
- Voids (white spaces) may appear depending on the paper type (uneven application of chromogenic coating).
- It may not be possible to recreate an original image because a certain density level cannot be achieved due to the following causes:
  - ∗ Environmental temperature, power supply and voltage
  - ∗ Paper type (chromogenic characteristics)
  - ∗ Paper variations, such as variations among manufacturing lots
  - ∗ Printing pattern (effect of heat accumulation of the print head or of voltage drop/speed change due to high duty)
- For multi-tone printing, the preservative quality of materials printed using multi-tone printing decreases in direct relationship with the lighter the printing. Accordingly, do not use multi-tone printing when preservative quality is required.
- Reading quality of barcodes/2-dimensional symbols in multi-tone graphics printing is not guaranteed.
- The print density setting for multi-tone printing is affected by the print density setting for printing in monochrome. Accordingly, be sure to set the print density for printing in monochrome first and then set the print density for multi-tone printing.
- The data size of multi-tone graphics printing is approximately four or more times larger than that of graphics printing in monochrome. Accordingly, intermittent printing tends to occur more often with multi-tone graphics than graphics printing in monochrome.
- It is recommended to use NV or download graphics for multi-tone graphics printing.
- It is recommended to use the Built-in USB/Ethernet interface for raster graphics printing.
- It is recommended not to specify double-height or double-width for the raster graphics printing commands.

Electrical Characteristics

Supply voltage			DC 24 V±7%
Current consumption (when using the PS-190 at 24V)	Standby		Mean: Approximately. 0.1 A
	Operating	Slip printing	Mean: Approximately. 1.7 A
		Receipt printing	Mean: Approximately. 1.8 A Note: When print ratio is approximately 18% • Continuous printing for 30 lines (repeating 20H-7FH) ∗ Font A, 42 columns, ASCII character • 5 line feeding • Autocutting 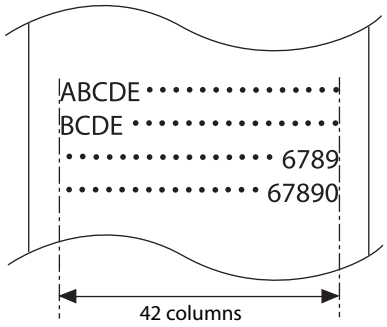

If printing is continuously performed with a high ratio, the overcurrent protection may be activated and result in uneven print density or a low voltage error. Therefore, the printing length must not exceed the following values when printing with high print ratio.
Print ratio: Number of dots being energized per one dot line/Total number of dots per one dot line (512 dots)

Print ratio	50%	100%
Print example	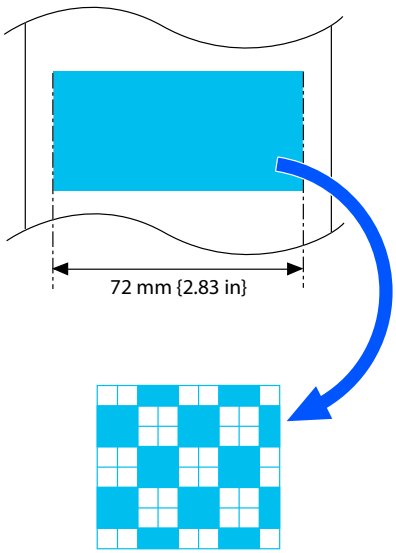	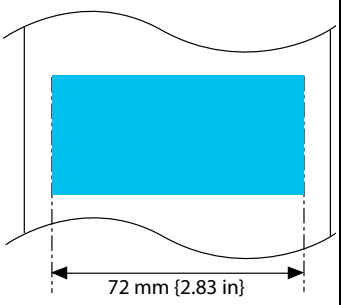
Print length	20 mm {0.79 in}	20 mm {0.79 in}

Reliability

Life*1	Slip printer section/ Endorsement printer section	Number of carriage driving times	12,000,000 times for each section
		Number of paper feeds	Total for the sections: 27,000,000 lines
		Print head	200 million characters (when printing with Font B only)
	Receipt printer section	Printer mechanism	20,000,000 lines (when repeatedly printing 20 lines with 4.23 mm {0.17 in} line spacing and feeding 10 lines)
		Print head	200 km (when using the certified paper types, TF50KS-EY, PD160R, KT55FA)
		Autocutter	3,000,000 cuts (when using the certified paper types, TF50KS-EY, PD160R, KT55FA)
	MICR reader mechanism (factory-installed option)		240,000 passes (for US personal checks)
MTBF*2	Slip printer section/ Endorsement printer section		180,000 hours
	Receipt printer section		360,000 hours
MCBF*3	Slip printer section/ Endorsement printer section	Number of carriage driving times	29,000,000 times for each section
		Number of paper feeds	Total for the sections: 65,000,000 lines
	Receipt printer section		96,000,000 lines

*1: Indicates the point at which the wear-out failure period starts.
*2: Indicates the mean time between failures during the random failure period.
*3: Indicates the overall mean cycles between failures, including wear-out and random failures, before the life is reached.

Environmental Conditions

Temperature/ Humidity	Operating	5 to 45°C {41 to 113°F}, 10 to 90% RH
	Storage	-10 to 50°C {14 to 122°F}, 10 to 90% RH (except for paper and ink ribbon cartridges)
		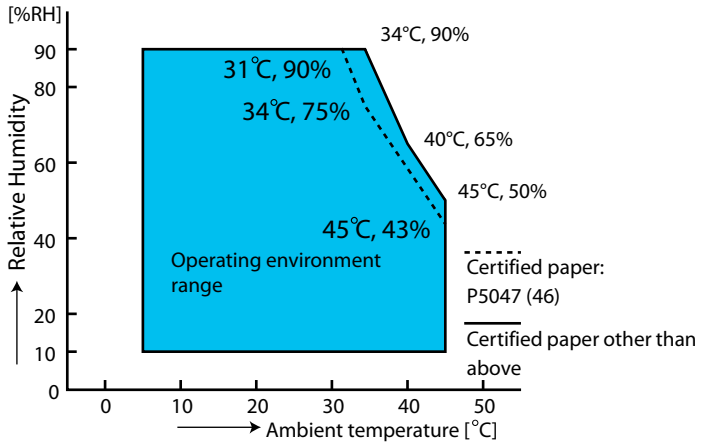
Vibration resistance	When packed	Frequency: 5 to 55 Hz Acceleration: Approximately 19.6 m/s^2 {2G} Sweep: 10 minutes (half cycle) Time: 1 hour Orientation: x, y, and z There is no external or internal visible damage and the unit operates normally after being subjected to vibration.
Shock resistance	When packed	Packing: Epson standard package specifications Height: 50 cm {19.69 in} Orientation: 1 corner, 3 edges, and 6 surfaces There is no external or internal visible damage and the unit operates normally after being dropped.
	When unpacked	Height: 5 cm {1.97 in} Orientation: Lift one edge and release it (for all 4 edges) There is no external or internal visible damage and the unit operates normally after being dropped while not operating.
Acoustic noise (operating, receipt printer section)		Approximately. 55 dB (bystander position) (including autocutting operation) Note: The values above are measured in the Epson evaluation condition. Acoustic noise differs depending on the paper used, printing contents, and the setting values, such as print speed or print density.
Air pressure (Altitude)		726 hPa (Approximately. 3000 m {3280.84 yards} above sea level) or less

External Dimensions and Mass

The external dimensions and mass of the standard model (with MICR reader and endorsement printer)

- Height: Approximately 181 mm {7.13 in}
- Width: Approximately 186 mm {7.32 in}
- Depth: Approximately 278 mm {10.94 in} (excluding the connector cover)
- Mass: Approximately 4.4 kg {9.7 lb}

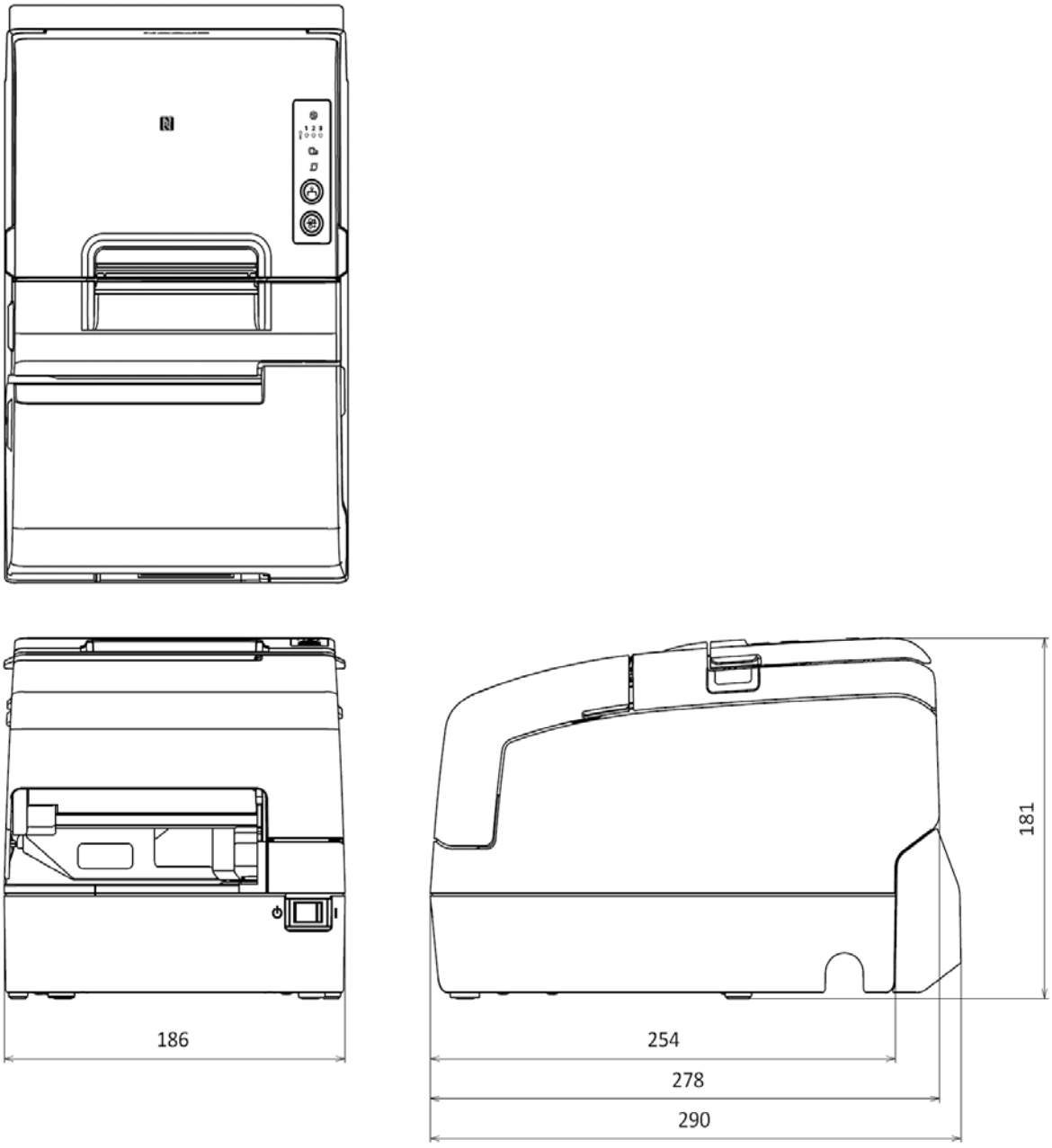

[units: mm (All the numeric values are typical.)]

Specifications of Interfaces and Connectors

USB Interface

USB interface connector

USB Type-B connector

USB transmission specifications

USB function

Overall specifications		According to USB 2.0 specifications
Transmission speed		USB Full-Speed (12 Mbps)
Transmission method		USB bulk transmission method
Power supply specifications		USB self power supply function
Current consumed by USB bus		2 mA
USB packet size (with full-speed connection)	USB bulk OUT (TM)	64 bytes
	USB bulk IN (TM)	64 bytes
USB device class		USB vendor-defined class.

USB descriptor

		USB vendor-defined class
Vendor ID		04b8h
Product ID		0202h
String Descriptor	Manufacturer	EPSON
	Product	TM-H6000VI
	Serial number	Character string based on the product serial number

Network Interface

For both Ethernet interface and Wi-Fi interface

Support protocols

Protocols	Usage
IP, ARP, ICMP, UDP, TCP	Basic communication protocols
LP, LPR, TCP Socket Port	Printing protocols
HTTP/HTTPS	Used in ePOS-Print and Web Config
SNMP, ENPC	Used in setting and monitoring
DHCP, APIPA	Used in automatic setting for the IP address and so on

Network parameters

See "Setting and reference items shared by Ethernet/Wi-Fi" on page 74 and "Setting and reference items for Ethernet" on page 76 or "Setting and reference items for Wi-Fi" on page 77.

For Ethernet interface

Communication specifications

10BASE-T/100BASE-TX

For Wi-Fi Interface

NOTE

When using wireless LAN, make sure you disconnect the LAN cable. If a LAN cable is connected, wireless LAN is disabled.

Specification

Communication Standard*

•IEEE802.11b (2.4 GHz)
•IEEE802.11g (2.4 GHz)
•IEEE802.11n (2.4 GHz)
•IEEE802.11a (5 GHz)
•IEEE802.11n (5 GHz)
•IEEE802.11ac (5 GHz)

*: The frequency bands that can be used vary depending on the model.

Security

Security can be selected from among the following:

•WPA/WPA2-PSK
•WPA3-SAE
•WPA2/WPA3-Enterprise

SimpleAP function

The SimpleAP function is a function that allows this printer to operate as a simple wireless access point, and users can use this to simply and wirelessly perform network settings.
The following setting values are applied when the SimpleAP function is operating.

Parameter	Setting value
SSID	DIRECT-TM-H6000VI-"serial number"
Security	WPA2-PSK
Passphrase	See "Default Password for "Default Password for Setup / Default Passphrase for SimpleAP" on page 157.
IP Address	192.168.223.1 or 172.16.10.1
DHCP server function	Enabled

NOTE

- When initializing to factory default, the printer starts up as a SimpleAP.
- SimpleAP is enabled until you change the network parameters from the default values. See "Setting and reference items shared by Ethernet/Wi-Fi" on page 74, or change the IP address setting method to something other than DHCP (Auto).
- SimpleAP can be used to connect up to 8 hosts simultaneously.

Notes on Using the Wi-Fi Model

- Keep the printer away from the devices, such as kitchen microwaves, that may cause radio wave interference.
- Use channels that are away from the frequency bands that may cause radio wave interference.
- Place shields between the printer and the devices that may cause radio wave interference.
- Select either 2.4 GHz or 5 GHz, whichever is free from radio wave interference.
- In auto channel setting for the access point, do not select a channel in which the printer may cause radio wave interference.

Notes on Wi-Fi connection

Because not all the combinations of the printer and Wireless LAN units have been checked for operation, the operation of the printer in combination with all the Wireless LAN units is not guaranteed. Especially in the ad-hoc mode, the printer may not operate normally, depending on the combination of the device to connect with. Be sure to carry out evaluation of the operation before use.

Notes on use

- When you initialize or change the printer settings, the printer is reset to reflect the settings. It may take about 1 minute depending on the network settings or environment. Also, your application may indicate power off during the time waiting for reset. In that case, wait for about 1 minute, and then reconnect to the printer.
- Where Wi-Fi communication is in heavy traffic, your application may falsely recognize that the communication is disconnected and indicate power off due to response delay. In that case, disable Power Save to improve the trouble.

Default Password for Setup / Default Passphrase for SimpleAP

The default password and the passphrase are as follows:

Password label	Password / Passphrase
Attached to the product	Printed on the label
Not attached to the product	Serial number (10-digit alphanumeric characters, case-sensitive)

The password label is attached at the location shown below.

The serial number is on the nameplate attached at the location shown below.

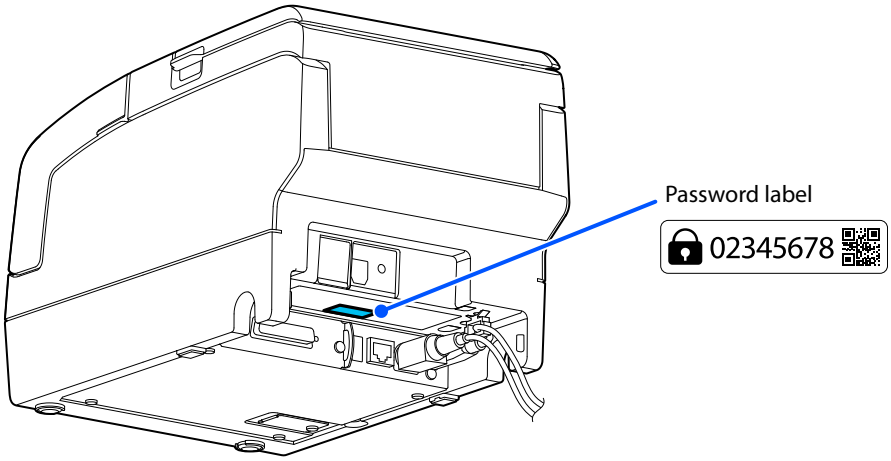

You can also find the serial number on the self-test printed sheet and on the "SimpleAP Start" sheet. On the "SimpleAP Start" sheet, the last 10 digits of the SSID is the serial number.

If the password label is lost, the default password can be checked by printing the status sheet. (If there is no password on the status sheet, the default password is a serial number.)

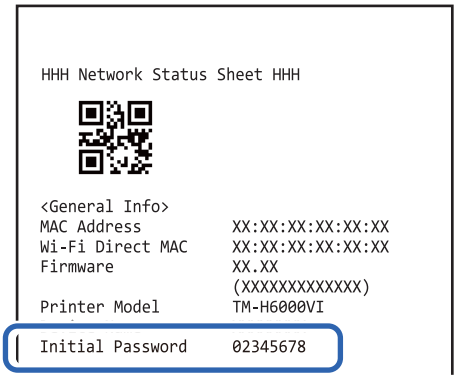

To improve security, it is recommended to change the administrator password from the default password.

The password can be changed from [Advanced Settings] - [Product Security] - [Change Administrator Password] in Web Config. It can also be changed using TM-H6000VI Utility.

RS-232 Serial Interface

Interface board specifications (RS-232-compliant)

Item		Specifications
Data transfer method		Serial
Synchronization		Asynchronous
Handshake		Select one of the following with DIP switch 1-3: • DTR/DSR • XON/XOFF
Signal level	MARK	-3 to -15V logic "1"/OFF
	SPACE	+3 to +15V logic "0"/ON
Bit length		Select one of the following with DIP switch 1-4: • 7 bit • 8 bit
Transmission speed [bps: bits per second]		• Select one of the following with DIP switch 1-7/1-8: 4800/ 9600/ 19200/ 38400 bps • Select one of the following with commands (when DIP switches 1-7/1-8 are set to OFF): 2400/ 4800/ 9600/ 19200/ 38400/ 57600/ 115200 bps
Parity check		Select one of the following with DIP switch 1-5: • Yes • No
Parity selection		Select one of the following with DIP switch 1-6: • Even • Odd
Stop bit		1 or more bits However, the stop bit for data transfer from the printer is fixed to 1 bit.
Connector		DSUB 25-pin (female) connector (Printer side)

Functions of each connector pin

Pin no.	Signal name	Signal direction	Function
1	FG	—	Frame ground
2	TXD	Output	Transmission data
3	RXD	Input	Reception data
4	RTS	Output	Equivalent to DTR signal (pin 20)

Pin no.	Signal name	Signal direction	Function
6	DSR	Input	This signal indicates whether the host computer can receive data. • SPACE status Indicates that the host computer can receive data. • MARK status Indicates that the host computer cannot receive data. When DTR/DSR control is selected, the printer transmits data after confirming this signal (except if transmitted using some ESC/POS commands). When XON/XOFF control is selected, the printer does not check this signal. Changing DIP switch 2-7 lets this signal be used as a printer reset signal. When you use this signal as the printer's reset signal, the printer is reset when the signal remains MARK for a pulse width of 1 ms or more.
7	SG	—	Signal ground
20	DTR	Output	1) When DTR/DSR control is selected, this signal indicates whether the printer is BUSY. • SPACE status Indicates that the printer is ready to receive data. • MARK status Indicates that the printer is BUSY. Set BUSY conditions with DIP switch 2-1. "Selecting the BUSY Status" on page 65. 2) When XON/XOFF control is selected, the signal indicates that the printer is properly connected and ready to receive data from the host. The signal is always SPACE, except in the following cases: • During the period from when power is turned on to when the printer is ready to receive data. • During the self-test.
25	INT	Input	Changing DIP switch 2-8 enables this signal to be used as a reset signal for the printer. The printer is reset if the signal remains at SPACE for a pulse width of 1 ms or more.

XON/XOFF

When XON/XOFF control is selected, the printer transmits the XON or XOFF signals as follows. The transmission timing of XON/XOFF differs, depending on the setting of DIP switch 2-1.

Signal	Printer status	DIP switch 2-1	
		1 (ON)	0 (OFF)
XON	1) When the printer goes online after turning on the power (or reset using the interface)	Transmit	Transmit
	2) When the receive buffer is released from the buffer full state	Transmit	Transmit
	3) When the printer switches from offline to online	—	Transmit
	4) When the printer recovers from an error using some ESC/POS commands	—	Transmit
XOFF	5) When the receive buffer becomes full	Transmit	Transmit
	6) When the printer switches from online to offline	—	Transmit

Code

The hexadecimal numbers corresponding to the XON/XOFF codes are shown below.

- XON code: 11H
- XOFF code: 13H

CAUTION

- When the printer goes from offline to online and the receive buffer is full, XON is not transmitted.
- When the printer goes from online to offline and the receive buffer is full, XOFF is not transmitted.
- When DIP switch 1-3 is off, XON is not transmitted as long as the printer is offline, even if a receive buffer full state has been cleared.

NFC Tag

Transmission standard	ISO14443 A
Memory	144 byte
Transmission distance	Approximately 10 mm {0.39 in} from the NFC installation location.

NOTE

- The transmission distance is an estimate that depends on our experiment conditions and is not a guaranteed value.
- It varies based on the installation environment and target device.

Bluetooth Low Energy Technology Advertising

Introduction

By connecting a *Bluetooth* adapter (Laird Connectivity, BT820), this product can function as an iBeacon peripheral.

If the power is turned on after this device is connected to a *Bluetooth* adapter, then *Bluetooth* Low Energy Technology Advertising Packets are transferred.

By default, the TM-H6000VI transmits the packet according to the iBeacon Format from Apple. You can also change the data that is transmitted by following the steps in "Changing the Bluetooth Low Energy Technology Advertising Packet" on page 162.

For the *Bluetooth* Low Energy Technology standard and HCI commands for the *Bluetooth* adapter, refer to the following URL.

https://www.bluetooth.com/specifications/

Glossary:

Term	Description
Bluetooth Low Energy Technology Advertising	The name of this function.
Bluetooth Low Energy Technology Advertising Packet	The data sent by this function from the printer.
Bluetooth adapter	The BT820 from Laird Connectivity A USB dongle to connect to the USB Type-A connector.
iBeacon	The format stipulated by Apple for *Bluetooth* low energy technology Advertising Packets When using the default settings for the TM-H6000VI (*Bluetooth* adapter installed in the printer and the printer is on), the *Bluetooth* low energy technology Advertising Packet is transmitted in iBeacon format.

Dongle specifications

Manufacturer: Laird Connectivity

Model name: BT-820

Procedure

When turning on the TM-H6000VI, the *Bluetooth* adapter connected to the USB Type-A connector is enabled.

If you install the *Bluetooth* adapter after turning on the printer, this is not enabled.

Bluetooth Low Energy Technology Advertising Packet Format

In the TM-H6000VI, the iBeacon format is used by default for the *Bluetooth* low energy technology Advertising Packet.

The UUID for the TM-H6000VI is "fac1ba2f-61a2-4d83-9a8c-60087c232569".

The user can edit the following specifications in the iBeacon format: UUID, Major number, Minor number, and Measured Power.

iBeacon Packet Format

Content	Data Length	Value	Description
Length of this data	1 byte	02h	
AD type	1 byte	01h	Adtype: flags
Flags	1 byte	06h	Fixed value (06h)
Length of this data	1 byte	1Ah	Fixed value (1Ah)
AD type	1 byte	FFh	Adtype: Company identifier
Company Identifier code	2 bytes	004Ch	Apple's manufacture ID
iBeacon type	1 byte	02h	Incomplete List of 16-bit service UUIDs
iBeacon length	1 byte	15h	15h=21=16+2+2+1
UUID	16 bytes	-	Default UUID = fac1ba2f-61a2-4d83-9a8c-60087c232569
Major Number	2 bytes	-	
Minor Number	2 bytes	-	
Measured Power	1 byte	C7h	C7h (-57 dB)

Changing the Bluetooth Low Energy Technology Advertising Packet

The TM-H6000VI can acquire a configuration script from the printer.

You can also change settings by transmitting the configuration script to the printer.

The configuration script only supports UTF-8 encoding.

The iBeacon Format is defined in the configuration script by default for the TM-H6000VI.

You can change this Packet Format to support Eddystone-UID or Eddystone-URL.

However, the TM-H6000VI only supports single Advertising Data Packets.

You can change the settings using the following method.

- Changing settings using an HTTP Request

The method of changing settings via an HTTP Request is explained below.

Digest authentication

You need Digest authentication to communicate with the printer.

The ID for the authentication is "epson".

For the default password, refer to "Default Password for Setup / Default Passphrase for SimpleAP" on page 157.

Escape processing for configuration scripts

When reading/writing a configuration script for a printer, the strings (content of the configuration script) being transmitted and received uses the following escape processing. However, escape is not performed for uXXXX (hexadecimal strings) such as Japanese.

Escape Processing

Escape	Description
\"	quotation mark
\\	reverse solidus
\b	backspace
\f	form feed
\n	line feed
\r	carriage return
\t	tab
\u002F	solidus
\u003C	<
\u003E	>
\u002B	+

Acquiring the configuration script from the printer using an HTTP request

A response for the json format is acquired using the GET method for the HTTP request.

Request

Request Header

```
Request header: Content-Type: text/plain; charset=utf-8
http://(printer IP address)/webconfig/beacon.cgi?Type=(one of the following Types)
```

Types

Type	Description
(none)	If a Type is left out, the same operation is performed as when current is specified.
current	Specifies the currently enabled configuration script.
volatile	Specifies the configuration script stored in volatile memory.
static	Specifies the configuration script stored in non-volatile memory.
default	Specifies the default configuration script.

Type	Description
status	Acquires information for the *Bluetooth* adapter.

Response

Response Header

```
Content-Type: application/json; charset=utf-8
Access-Control-Allow-Origin: *
Access-Control-Allow-Methods: POST, GET, OPTIONS, HEADER
Access-Control-Allow-Headers: Content-Type, Content-Length, Authorization
X-Content-Type-Options: nosniff
X-XSS-protection: 1; mode=block
X-Frame-Options: deny
Content-Security-Policy: default-src 'none'
WWW-Authenticate: Digest realm="<IPaddr>", nonce="xxxxxxxxxxxxxxxxxxxxxxxxxxxxxxxxxxxx", qop="auth"
```

Response

Function	GET Parameter	Results	Response
Acquires the configuration script currently enabled	Type=current Or no Type is set	Acquisition successful	200 OK
Acquires the configuration script on the volatile memory	Type=volatile	Acquisition successful	200 OK
		Acquisition failed (No file)	404 Not Found
Acquires the configuration script on the non-volatile memory	Type=static	Acquisition successful	200 OK
		Acquisition failed (No file)	404 Not Found
Acquires the Default configuration script	Type=default	Acquisition successful	200 OK
Acquires information from the *Bluetooth* adapter	Type=status	Acquisition successful	200 OK
		Acquisition failed (No adapter connected)	404 Not Found
Others	Type = Other than the above or A parameter except for Type exists	Type is invalid	400 Bad Request

GET Response Body (Type =Other than the status)

Response Status	Response Body

200 OK	{
	"message": "Success"
	"detail": null
	"description" : <Encoded string for the configuration script>
	}

404 Not Found	 "message": "Requested file not found" "detail": null "description" : null }

400 Bad Request	{
	"message": "Invalid Parameter"
	"detail": null
	"description" : null
	}

GET Response Body (Type=status)

Response Status	Response Body

200 OK
 	
The HCI Version for the *Bluetooth* adapter is 6 or higher
	{
	"message": "Success",
	"detail": null,
	"description" : {
	"VendorID": "0a12",
	"ProductID": "0001",
	"ProductName": "CSR8510 A10",
	"Bluetooth LE": "Support"
	}
	}

200 OK
 	
The HCI Version for the *Bluetooth* adapter is 5 or lower
	{
	"message": "Success",
	"detail": null,
	"description" : {
	"VendorID": "0a12",
	"ProductID": "0001",
	"ProductName": "(no name)",
	"Bluetooth LE": "Not support"
	}
	}

404 Not Found Adapter not connected	 "message": "Beacon dongle not connected", "detail": null, "description" : null }

Writing the configuration script to the printer

You can save a configuration script to the printer using the HTTP POST method.

You can save the configuration script to volatile or non-volatile memory.

When changing using a low frequency less than once an hour, you can save to non-volatile memory; however, when changing at a higher frequency, you need to save to volatile memory.

When the change is successful, the advertising data is changed.

Request

```
Content-Type: text/json; charset=utf-8
http://(printer IP address)/webconfig/beacon.cgi
```

See the POST parameters in table the "Response" for the parameters.

Response

Response Header

```
Content-Type: application/json; charset=utf-8
Access-Control-Allow-Origin: *
Access-Control-Allow-Methods: POST, GET, OPTIONS, HEADER
Access-Control-Allow-Headers: Content-Type, Content-Length, Authorization
X-Content-Type-Options: nosniff
X-XSS-protection: 1; mode=block
X-Frame-Options: deny
Content-Security-Policy: default-src 'none'
X-RateLimit-Limit: 1            (when type=static only)
X-RateLimit-Remaining: 1 or 0      (when type=static only)
X-RateLimit-Reset: 1390941626     (when type=static only)
WWW-Authenticate: Digest realm="<IPaddr>", nonce="xxxxxxxxxxxxxxxxxxxxxxxxxxxxxxxxxxxx", qop="auth"
```

Response

Function	POST Parameters	Results	Response
Updating the configuration script in volatile memory	{ "type" : "volatile", "description": "<The string for the configuration script that performed escape processing>" }	Update successful	200 OK
		Update failed When the parameter is too long	413 Request Entity Too Large
		Update failed When an error occurs when applying a new configuration script	500 Internal Server Error
Deletes the configuration script from volatile memory	{ "type" : "volatile", "description": "delete" }	Deleting successful	200 OK
		Deleting failed	500 Internal Server Error

Function	POST Parameters	Results	Response

Updates the configuration script in non-volatile memory	{
	"type" : "static",
	"description": "<The string for the configuration script that performed escape processing>"
	}
		Update successful	200 OK
			
			It has following header:
			X-RateLimit-Limit: 1
			X-RateLimit-Remaining: 0
			X-RateLimit-Reset: xx

		Update failed When the parameter is too long	413 Request Entity Too Large It has following header: X-RateLimit-Limit: 1 X-RateLimit-Remaining: 1 X-RateLimit-Reset: xx
		Update failed When an error occurs when applying a new configuration script	500 Internal Server Error It has following header: X-RateLimit-Limit: 1 X-RateLimit-Remaining: 0 X-RateLimit-Reset: xx
		Update failed When the gap between updating is more than once an hour	429 Too Many Requests It has following header: X-RateLimit-Limit: 1 X-RateLimit-Remaining: 0 X-RateLimit-Reset: xx

Deletes the configuration script from non-volatile memory	{
	"type" : "static",
	"description": "delete"
	}
		Deleting successful	200 OK

		Deleting failed	500 Internal Server Error
Others	• No parameters • Invalid parameters • Error in escape processing	Update failed	400 Bad Request

POST Response Body

Response Status	Body

200 OK	{
	"message": "Success",
	"detail": null,
	"description" : < The string for the configuration script that performed escape processing >
	}

400 Bad Request	{
	"message": "Invalid Parameter",
	"detail": "***", (see Table 400 Bad Request Details)
	"description" : null
	}

413 Request Entity Too Large	{
	"message": "Request Entity Too Large",
	"detail": null,
	"description" : null
	}

429 Too Many Requests	{
	"message": "You sent too many requests in a given amount of time.",
	"detail": null,
	"description": null
	}

500 Internal Server Error	{
	"message": "Failed to update settings",
	"detail": "***", (see Table 500 Internal Server Error Details)
	"description" : null
	}

400 Bad Request Details

Case	Body

The correct escape processing is not performed at the point escape processing is needed	{
	"message": "Invalid Parameter",
	"detail": "Special characters must be escaped",
	"description" : null
	}

An undefined Type parameter has been specified	{
	"message": "Invalid Parameter",
	"detail": "A parameter 'type' is invalid",
	"description" : null
	}

Case	Body

No Type specified
Or an invalid parameter has been specified
	{
	"message": " Invalid Parameter ",
	"detail": "A parameter 'type' or 'description' is not specified",
	"description" : null
	}

When detecting a string with invalid escape processing	{
	"message": " Invalid Parameter ",
	"detail": "Invalid parameter is found",
	"description": null
	}

500 Internal Server Error Details

Case	Body

Update failed	{
	"message": "Failed to update settings",
	"detail": null,
	"description" : null
	}

Deleting failed	{
	"message": "Failed to delete settings",
	"detail": null,
	"description" : null
	}

An error occurs when applying a new configuration script	{
	"message": " Failed to set the settings to the beacon.",
	"detail": <Error code from BeaconCtrl>
	"description" : null
	}

Editing the Configuration Script

In the configuration script, the settings for the module for *Bluetooth* in Linux can be written in the same way as for the Bluez hcitool, and you can customize the settings.

Make sure you include the following descriptors in the configuration script.

- Advertising stop
- Device address specifications
- Advertising parameter specifications
- Advertising start
- Advertising data specifications

Starting and stopping Bluetooth low energy technology Advertising

Format: cmd 0x08 0x000A n

Function: Starting and stopping transmission of the Advertising packet.

Parameter n	Length	Function
00	2 characters	Advertising stop
01	2 characters	Advertising start

NOTE

When specifying a start point, make sure you start Advertising using this command before "Bluetooth low energy technology Advertising Packet specifications" on page 171.

Device address specifications

Format: cmd 0x08 0x0005 n6 n5 n4 n3 n2 n1

Function: Specify a BD Address. Specify a value in Little Endian.

NOTE

As a Random Static Address is used in TM-H6000VI, bit7 and bit6 for n1 need to be set to 1.

Bluetooth low energy technology Advertising parameter specifications

Format: cmd 0x08 0x0006 aL aH bL bH c d e f1 f2 f3 f4 f5 f6 g h

Function: Sets a variety of parameters for the Advertising packet.

Definition	Length	Default	Description
Min advertising Interval	2 bytes	aL: 00a0h aH: 0000h	00a0h: (160) * 0.625 = 100ms Period 00a0h is the minimum that can be specified.
Max advertising Interval	2 bytes	bL: 00a0h bH: 0000h	00a0h: (160) * 0.625 = 100ms Period 00a0h is the minimum that can be specified.
Advertising type	1 bytes	c: 03h	03h: ADD_NONCONN_IND
Own address type	1 bytes	d: 01h	01h: random device address
Peer address type	1 bytes	e: 00h	00h: public device address
Peer address	6 bytes	f1-f6: 00h	No use
Advertising channel map	1 bytes	g: 07h	07h: All channel enabled
Advertising filter policy	1 bytes	h: 02h	02h: Process scan requests from all devices and only connection requests from devices that are in the White List.

For details, refer to the HCI commands for the *Bluetooth* adapter.

Bluetooth low energy technology Advertising Packet specifications

Format: cmd 0x08 0x0008 d1 d2 … d32

Function: Sets the Data for the *Bluetooth* low energy technology Advertising packet.

Specify all from d1 to d32. If these are not necessary, specify 00 for each one.

Definition	Length	Default (iBeacon)	Description
Advertising data length	1 byte	d1: 1eh	1eh: 30bytes
Advertising Data	31 bytes	d2: 02h d3: 01h d4: 06h d5: 1ah d6: FFh d7: 4ch d8: 00h d9: 02h d10: 15h	02h: Length
		d11-d26: fah c1h bah 2fh 61h a2h 4dh 83h 9ah 8ch 60h 08h 7ch 23h 25h 69h	TM UUID fac1ba2fh-61a2h-4d83h-9a8ch-60087c232569h
		d27: 00h d28: Model No.	Major number The Default specifies the ID that indicates the model type using keywords shown in "Keywords" on page 172. You can also specify a direct value.
		d29: 00h d30: IP address 4th byte	Minor number The Default specifies the 4th sector of the IP address using keywords shown in "Keywords" on page 172. You can also specify a direct value.
		d31: c7h	Measured Power C7h: -57dB
		d32: 00h	00h: Fixed value

Keywords

You can specify the following keywords when describing the script.

Reserve String	Length	Content	Example
$SERIAL_ADDR	6 bytes	Address that uses 1 for the MSB2bits in the last 6 digits of the printer's serial number.	When the Serial No. is ABCD123456, the Address uses 1 for the MSB2bits for the leading 1 byte in the last 6 digits. F1h:32h:33h:34h:35h:36h is generated and replaced with a string using 36h 35h 34h 33h 32h F1h sorted in Little endian.
$RANDOM_ADDR	6 bytes	Address in which the printer generates a random 6 byte number, and 1 is for the MSB2bits of the leading 1 byte.	Generates a random 6 byte number in the printer and replaces it with a string that sorts the Address using 1 for the MSB2bits for the leading 1byte in Little endian.
$IPn	1 byte	Value for #n in the printer's IP address.	When the IP address is 192.168.192.168, it is replaced with the following string. IP1: c0h IP2: A8h IP3: 64h IP4: c8h
$MODEL_NO	2 bytes	Can be used for differentiating printers	0010h is used for the TM-H6000V. 0028h is used for the TM-H6000VI. 0000h: No use 0001h: Reserved 0010h: TM-H6000V 0028h: TM-H6000VI
$MACn	1 byte	Value for #n in the MAC address.	Available range: $MAC1,$MAC2, $MAC3, $MAC4, $MAC5, $MAC6
$BD_ADDRn	1 byte	Value for #n in the *Bluetooth* address.	Available range: $BD_ADDR1, $BD_ADDR2, $BD_ADDR3, $BD_ADDR4, $BD_ADDR5, $BD_ADDR6

Character Code Tables

See the Character Code Tables for TM Printers that can be accessed from the following URL:
https://support.epson.net/publist/reference_en/