EPSON

TM-L100

Technical Reference Guide

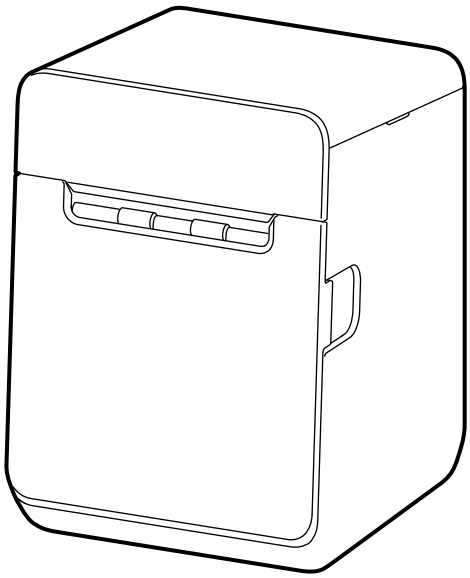

Product Overview

Describes features of the product.

Setup

Describes setup and installation of the product and peripherals.

Handling

Describes how to handle the product.

Advanced Usage

Describes advanced usage methods for the product.

Application Development Information

Describes how to control the printer and necessary information when you develop applications.

Appendix

Describes general specifications and character code tables.

M00143810
Rev. K

Cautions

- No part of this document may be reproduced, stored in a retrieval system, or transmitted in any form or by any means, electronic, mechanical, photocopying, recording, or otherwise, without the prior written permission of Seiko Epson Corporation.
- The contents of this document are subject to change without notice. Please contact us for the latest information.
- While every precaution has been taken in the preparation of this document, Seiko Epson Corporation assumes no responsibility for errors or omissions.
- Neither is any liability assumed for damages resulting from the use of the information contained herein.
- Neither Seiko Epson Corporation nor its affiliates shall be liable to the purchaser of this product or third parties for damages, losses, costs, or expenses incurred by the purchaser or third parties as a result of: accident, misuse, or abuse of this product or unauthorized modifications, repairs, or alterations to this product, or (excluding the U.S.) failure to strictly comply with Seiko Epson Corporation's operating and maintenance instructions.
- Seiko Epson Corporation shall not be liable against any damages or problems arising from the use of any options or any consumable products other than those designated as Original Epson Products or Epson Approved Products by Seiko Epson Corporation.

Trademarks

Microsoft and Windows are registered trademarks of Microsoft Corporation in the United States and/or other countries.

Wi-Fi®, WPA™, and WPA2™ are either registered trademarks or trademarks of Wi-Fi Alliance®.

The Bluetooth® word mark and logos are registered trademarks owned by Bluetooth SIG, Inc. and any use of such marks by Seiko Epson Corporation is under license.

IOS is a trademark or registered trademark of Cisco in the U.S. and other countries and is used under license.

Apple, Apple TV, Apple Watch, iPad, iPad Air, iPad Pro, iPhone, and Lightning are trademarks of Apple Inc., registered in the U.S. and other countries. tvOS is a trademark of Apple Inc.

Android™ is a trademark of Google LLC.

Google Play and the Google Play logo are trademarks of Google LLC.

QR Code is a registered trademark of DENSO WAVE INCORPORATED in Japan and other countries.

All other trademarks are the property of their respective owners and used for identification purpose only.

ESC/POS Command System

Epson ESC/POS is a proprietary POS printer command system that includes patented or patent-pending commands. ESC/POS is compatible with most Epson POS printers and displays.

ESC/POS is designed to reduce the processing load on the host computer in POS environments. It comprises a set of highly functional and efficient commands and also offers the flexibility to easily make future upgrades.

©Seiko Epson Corporation 2021–2025

For Safety

Key to Symbols

The symbols in this manual are identified by their level of importance, as defined below. Read the following carefully before handling the product.

⚠ **WARNING**	You must follow warnings carefully to avoid serious bodily injury.
⚠ **CAUTION**	Provides information that must be observed to prevent damage to the equipment or loss of data. • Possibility of sustaining physical injuries. • Possibility of causing physical damage. • Possibility of causing information loss.
CAUTION	Provides information that must be observed to avoid damage to your equipment or a malfunction.
NOTE	Provides important information and useful tips.

Warnings

⚠ **WARNING**	• **Handle the power cable with care.** Improper handling may lead to fire or electric shock. ∗ Do not modify or attempt to repair the cable. ∗ Do not place any heavy object on top of the cable. ∗ Avoid excessive bending, twisting, and pulling. ∗ Do not place the cable near heating equipment. ∗ Check that the plug is clean before plugging it in. ∗ Be sure to push the plug all the way in. • **Be sure to use the specified AC adapter PS-190 (Model: M368A).** Connection to an improper power source may cause fire or shock. • **Do not place multiple loads on the power outlet.** Overloading the outlet may lead to fire. • **Shut down your equipment immediately if it produces smoke, a strange odor, or unusual noise.** Continued use may lead to fire. Immediately unplug the equipment and contact qualified service personnel. • **Never disassemble or modify this product.** Tampering with this product may result in injury or fire. • **Do not allow foreign matter to fall into the equipment.** Penetration by foreign objects may lead to fire. • **If water or other liquid spills into this equipment, do not continue to use it.** Continued use may lead to fire. Unplug the power cord immediately and contact qualified service personnel. • **Do not use aerosol sprayers containing flammable gas inside or around this product.** Doing so may cause fire. • **Do not use this product in locations subject to high humidity or dust levels.** Excessive humidity and dust may cause equipment damage or fire.

Cautions

CAUTION

- **Do not connect cables in ways other than those mentioned in this manual.**
  Different connections may cause equipment damage.
- **Be sure to set this equipment on a firm, stable, horizontal surface.**
  The product may break or cause injury if it falls.
- **Do not place heavy objects on top of this product. Never stand or lean on this product.**
  Equipment may fall or collapse, causing breakage and possible injury.
- **Take care not to injure your fingers on the manual cutter**
  * When you remove printed paper
  * When you perform other operations such as loading/replacing roll paper
- **Do not open the roll paper cover without taking the necessary precautions, as this can result in injury from the autocutter fixed blade.**
- **To ensure safety, unplug this product before leaving it unused for an extended period.**
- **To avoid risk of electric shock, do not set up this product or handle cables during a thunderstorm.**
- **Never insert or disconnect the power plug with wet hands.**
  Doing so may result in severe shock.
- **Never attempt to repair this product yourself.**
  Improper repair work can be dangerous.

CAUTION

If this product is used in a place where silicon-based gases including siloxane (silicon adhesive, silicon oil, silicon powder, etc.) or malignant gases (nitric acid, hydrogen sulfide, ammonia, chlorine, etc.) are present in the air, contact failure may occur in mechanical contacts such as mechanical switch or DC motor in a short time due to adhesion or oxidation of the insulation film.

Restriction of Use

When this product is used for applications requiring high reliability/safety, such as transportation devices related to aviation, rail, marine, automotive, etc.; disaster prevention devices; various safety devices, etc.; or functional/precision devices, etc., you should use this product only after giving consideration to including fail-safes and redundancies into your design to maintain safety and total system reliability. Because this product was not intended for use in applications requiring extremely high reliability/safety, such as aerospace equipment, main communication equipment, nuclear power control equipment, or medical equipment related to direct medical care, etc., please make your own judgment on this product's suitability after a full evaluation.

Note about interference

- This product generates, uses, and can radiate radio frequency energy and, if not installed and used in accordance with the instruction manual, may cause harmful interference to radio communications.
- If this equipment does cause harmful interference to radio or television reception, which can be determined by turning the equipment off and on, the user is encouraged to try to correct the interference by one or more of the following measures:
  - Reorient or relocate the receiving antenna for the radio/TV.
  - Increase the separation between the equipment and the radio/TV.
  - Connect the equipment into an outlet on a circuit different from that to which the receiver is connected.
  - Consult your dealer or an experienced radio/TV technician for help.
- Never disassemble or modify this product.
- Seiko Epson Corporation shall not be liable for interference to radio/TV resulting from changes or modifications to this product not expressly approved by Seiko Epson Corporation.

Open Source Software License

This product uses open source software in addition to Epson proprietary software.
For information of the open source software used in this product, see the following URL.
http://xxx.xxx.xxx.xxx/licenses.html
For “xxx.xxx.xxx.xxx” in the above URL, input your printer’s IP address.

About this Manual

Aim of the Manual

This manual was created to provide information on development, design, and installation of POS systems and development and design of printer applications for developers.

NOTE

For Users in Europe, the Middle East and Africa
Models that comply with the cybersecurity requirements of the European Radio Equipment Directive (RED) 2014/53/EU have had changes made to specifications related to network communications, such as enhanced security.
These specification changes affect when using wired LAN, wireless LAN, and Bluetooth with compliant models.
For information on how to identify whether a product is compliant, the specifications of compliant products, and precautions for use, refer to the Cybersecurity Enhancement Supplementary Guide published on the model-specific manual page at the URL below.
☞ https://epson.sn

Manual Content

The manual is made up of the following sections:

Chapter 1	Product Overview
Chapter 2	Setup
Chapter 3	Handling
Chapter 4	Advanced Usage
Chapter 5	Application Development Information
Appendix	Product Specifications Specifications of Interface and Connector Character Code Tables Compatibility with USB Type-A

Contents

■ **For Safety** **3**
Key to Symbols 3
Warnings 3
Cautions 4
■ **Restriction of Use** **4**
■ **Note about interference** **4**
■ **Open Source Software License** **5**
■ **About this Manual** **6**
Aim of the Manual 6
Manual Content 6
■ **Contents** **7**

Product Overview ***11***

■ **Features** **11**
■ **Product Configurations** **13**
Models 13
Accessories 13
Options 13
■ **Part Names and Functions** **14**
Top/Front/Rear 14
Panel LED 15
Connectors 16
Online and Offline 19
■ **Status and Errors** **20**
Status Display 20
Network Connection Status 21
Error Status 22
■ **NV Memory (Non-Volatile Memory)** **24**
NV Graphics Memory 24
User NV Memory 24
Memory Switches (customized values) 24
R/E (Receipt Enhancement) 24
Maintenance Counter 25
■ **Useful Functions for Smart Devices (Device Charging model/Bluetooth model)** ... **26**
NFC Tag 26
QR Code 26

Setup *27*

■ **Flow of Setup** **27**

■ **Installing the Printer** **28**

Placing the Printer Vertically 29
Placing the Printer Horizontally 31

■ **Changing the Paper Width** **32**

Using 58 mm Wide Roll Paper 33
Using 80 mm Wide Roll Paper 33
Using 40 mm Wide Roll Paper 35

■ **Connecting Interface Cables** **37**

■ **Connecting the Optional Wireless LAN Unit (For Device charging model/Bluetooth model)** **40**

■ **Connecting the Optional Customer Display (For Device charging model/Bluetooth model)** **41**

■ **Connecting the Optional External Buzzer** **42**

Attachment Position 42

■ **Connecting the Cash Drawer** **43**

Required specifications of cash drawers 43
Connecting the drawer kick cable 44

■ **Connecting to the Power Source** **45**

Connecting the AC Adapter 45

■ **Connecting the Printer to the Host Devices** **48**

USB Interface 48
Ethernet Interface 48
Wireless LAN Interface (With OT-WL06) (For Device charging model/Bluetooth model) 51
Bluetooth Interface (For Bluetooth model) 58
MAC Address Confirmation 61
Printing Using Multiple Interfaces 62

Handling *63*

■ **Turning the Power On/Off** **63**

Turning the Power On 63
Turning the Power Off 63

■ **Opening/Closing the Roll Paper Cover** **64**

■ **Removing/Attaching the Rear Cover** **64**

■ **Installing or Replacing the Roll Paper** **65**

For Vertically Placed Printer 65
For Horizontally Placed Printer 67

■ **Removing Jammed Paper** **70**

■ **When the Roll Paper Cover does Not Open** **71**

■ **Cleaning the Printer** **73**
Cleaning the Printer Case 73
Cleaning the Inside of the Printer 73
■ **Preparing for Transport** **77**

Advanced Usage *78*

■ **Software Settings** **78**
Functions 81
■ **Setting/Check Modes** **91**
Self-test Mode 93
NV Graphics Information Print Mode (NV Graphics Information) 94
Receipt Enhancement Information Print Mode (Receipt Enhancement Information) 95
Software Setting Mode (Customize Value Settings) 96
Restore Default Values Mode (Restore Default Values) 98
Interface Setup Mode (Interface Setup) 99
TM-Intelligent Settings Information Print Mode (TM-Intelligent Information) 101
Peripheral Device Information Print Mode (Peripheral Device Information) 101
Hexadecimal Dumping Mode 102
■ **Printing a Status Sheet** **103**
■ **Resetting the Interface Settings** **105**
Resetting using the Interface Setup Mode 105
Resetting using the Status Sheet Button 105
■ **TM-Intelligent Function** **106**
Server direct print 106
Status Notification 106
■ **Network Tethering (iOS device only)**
(For Device charging model/Bluetooth model) **107**
Tablet Devices Supported by the Network Tethering 108
Enabling the Tethering Function 108
Connection Procedure 109

Application Development Information *111*

■ **Controlling the Printer** **111**
ePOS-Print XML 111
ePOS-Device XML 111
ESC/POS 111
■ **Controlling the Cash Drawer** **112**
■ **Controlling the Optional External Buzzer** **113**
■ **Software** **114**
Development Kit 114
Drivers 114

Utilities 115
Others 115
Download 116

■ **Precautions when Developing Applications 117**

Paper Removal Standby Setting 117
Power Supply SW Setting 117

■ **Application Development and Distribution for iOS 118**

■ **Notes on Printing Barcodes and Two-Dimensional Symbols 118**

Appendix 119

■ **Product Specifications 119**

Printing Specifications 119
Character Specifications 120
Auto Cutter 121
Paper Detector 122
Roll Paper Feeder 122
Paper Specifications 123
Printable Area 127
Printing and Cutting Positions 128
Built-in Memory 129
Electrical Specifications 129
Reliability 130
Environmental Conditions 131
External Dimensions and Weight 132

■ **Specifications of Interface and Connector 134**

USB Interface 134
Network Interface 135
Default Password for Setup / Default Passphrase for SimpleAP 138
RS-232 Serial Interface (Serial model) 139
Bluetooth Interface (Bluetooth model) 142
NFC Tag 145

■ **Character Code Tables 146**

■ **Compatibility with USB Type-A 147**

Product Overview

This chapter describes features of the product.

Features

Printing

- Liner-free label paper is supported.
- High speed label printing, up to 170 mm/s, is possible.
- 3 widths of roll paper; 40, 58, and 80 mm, are supported by attaching or detaching the roll paper guides.
- By using the "Batch rotate print (Upside Down)" function, you can print pages upside down to make it easier to read the pages when they are ejected from the front side of the printer.
- Supports a variety of language (ANK (includes Thai language)/Japanese/Simplified Chinese/Traditional Chinese/Korean)

Handling

- Can be installed vertically or horizontally.
- Easy drop-in paper loading.
- Automatically switches between valid interfaces and supports printing from multiple interfaces.
- Equipped with a paper removal detector which enables the printer to advance paper after detecting removal of printed paper.
- Ethernet, Bluetooth, and Wi-Fi connection status can be easily checked by viewing respective LED lights.
- Equipped with three USB Type-A ports for connecting the option devices. (Device Charging model/ Bluetooth model)
- The USB port for connecting a tablet computer; USB-A - Device Charging, can provide up to 2.1A. (Device Charging model/Bluetooth model)

Software

- TM-Intelligent function is equipped.
  - Supports server direct print function that automatically acquires print data from a Web server, and notifies print results to the server.
  - Supports status notification function, which enables the printer to send its status to a web server at a regular interval.
- NFC tag built into the printer unit for printing to a connected printer.
- Printing triggered by bar code scan by smart device camera.
- A utility for iOS/Android™ (Epson TM Utility) for making printer settings is provided.
- Printing of various types of bar codes, GS1-DataBar, and two-dimensional symbols (PDF417, QR code, MaxiCode, Composite Symbology, Aztec Code, DataMatrix) is supported.
- A maintenance counter function is supported.

Environment

- Paper saving function is available.

Others

- Optional external buzzer is available.
- Optional Wireless LAN unit, customer display are available. (Device Charging model/Bluetooth model)
- Optional wall hanging bracket is available to attach the printer to a wall.

Product Configurations

Models

- Serial model
- Device charging model
- Bluetooth model

* Available models may differ depending on the area.

Accessories

- 40 mm width roll paper guides
  The printer is shipped with 58 mm width roll paper guides installed inside.
- Rubber feet (4 pieces)
- Tape for fixing the printer (2 pieces)
- Locking wire saddle
- AC adapter
- AC cable (depending on printer model)
- Manuals

Options

- Wireless LAN unit (Model: OT-WL06)*
- Customer display (Model: DM-D30/DM-D70)*
- Optional external buzzer (Model: OT-BZ20)
- Wall Hanging Bracket Set (Model: OT-WH30)
  * They cannot be connected to the Serial model.

Part Names and Functions

Top/Front/Rear

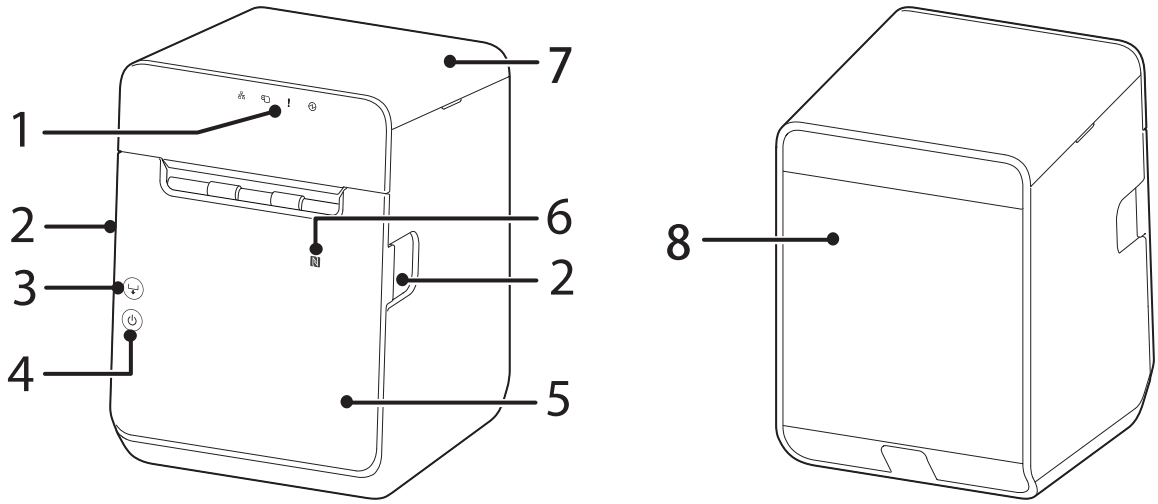

1	Panel LED	The LED lights indicate printer status.
2	Cover open lever	Operate this lever to open the roll paper cover.
3	Feed button	Press this button once to feed the roll paper for one line. Hold down this button to continue feeding the roll paper.
4	Power button	This button turns the printer on or off.
5	Roll paper cover	Open this cover when installing or replacing the roll paper.
6	NFC Tag	A mark is printed here to indicate the position of the NFC tag. Bring a smart device that supports NFC close to the NFC mark to establish communication.
7	Top cover	Open this cover if the roll paper cover does not open.
8	Rear cover	Open this cover when connecting the DC cable of the AC adapter, interface cables or peripheral devices.

NOTE

You can turn the printer on and off by operating the breaker without using the power button.
For more details, see "Precautions when Developing Applications" on page 117.

Panel LED

Power LED

- Lights when the power supply is on.
- Off when the power supply is off.
- Flashes during the network to start up, when waiting for power off, or updating firmware.

CAUTION	Do not turn on by using the power switch while waiting for the power to turn off (when the Power LED is flashing). Otherwise, it may not startup correctly.

Error LED

- Lights or flashes when an error occurs. (For information about the flashing patterns, see "Status and Errors" on page 20.)
- Lights after the power is turned on or after a reset (offline). Automatically goes out after a while to indicate that the printer is ready.
- Off when the printer is in standard mode (online).

Paper LED

- Lights when the roll paper is out.
- Flashes when prompting the user to remove printed paper or to operate the paper feed button.

Wi-Fi LED (Device charging model/Bluetooth model)

- Lights while the printer is connected to Wi-Fi.
- Off while the printer is not connected to Wi-Fi or while the printer is connected to a wired LAN.
- Flashes while communication is temporarily disabled because an IP address has not been acquired or for other reason.

NOTE	The Wi-Fi LED functions only when the wireless LAN unit (OT-WL06) is connected to the printer.

Ethernet LED

- Lights while the printer is connected to Ethernet.
- Off while the printer is not connected to Ethernet or while the printer is connected to Wi-Fi.
- Flashes while communication is temporarily disabled because an IP address has not been acquired or for other reason.

Bluetooth LED (Bluetooth model)

- Lights while the printer is connected via Bluetooth.
- Off while the printer is not connected via Bluetooth.
- Flashes while the printer is waiting to be paired with another device.

Connectors

All connectors are located on the lower rear of the printer. Interface types and the number of connectors vary by the printer model.

Serial Model

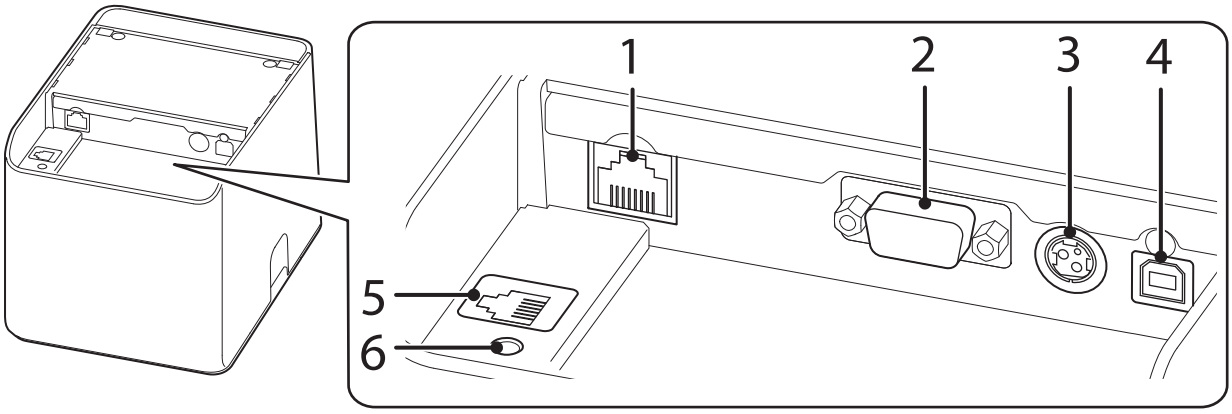

1	Ethernet connector	Connects the 10BASE-T/100BASE-TX LAN cable.
2	Serial connector	Connects a serial cable.
3	Power supply connector	Connects the DC cable for the AC adapter.
4	USB Type-B connector	Connects the USB cable for connecting to computers.
5	Drawer kick connector	Connects the modular cable for the cash drawer.
6	Status sheet button	Initializes the interface settings or prints a status sheet to verify the settings.

Device Charging Model/Bluetooth Model

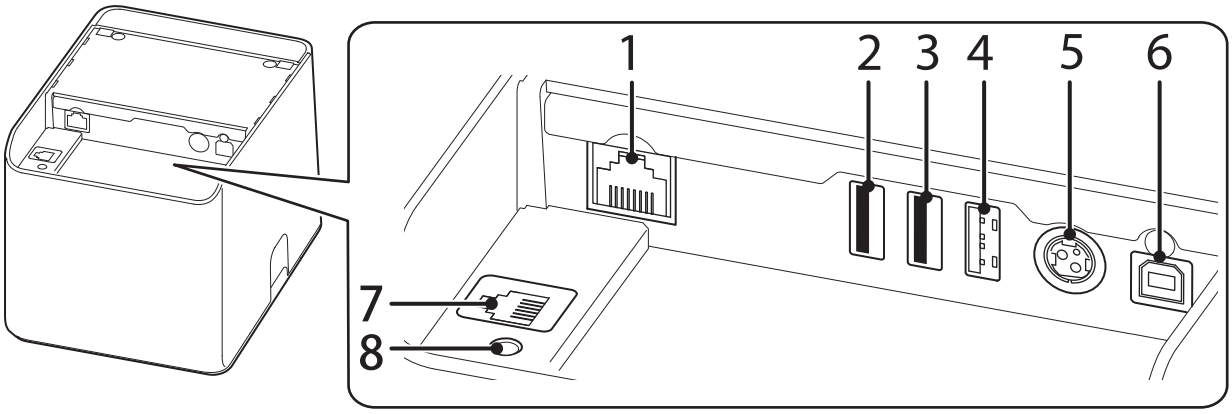

1	Ethernet connector	Connects the 10BASE-T/100BASE-TX LAN cable.
2,3	USB Type-A connector The USB connector color is black	For connecting a peripheral device such as a customer display, handheld scanner, or wireless LAN unit.
4	USB connector (USB-A - Device Charging) The USB connector color is white	Connects a USB cable for connecting to a tablet computer. Enables data communication with the tablet while charging it.
5	Power supply connector	Connects the DC cable for the AC adapter.
6	USB Type-B connector	Connects the USB cable for connecting to computers.
7	Drawer kick connector	Connects the modular cable for the cash drawer.
8	Status sheet button	Initializes the interface settings or prints a status sheet to verify the settings.

CAUTION

About the USB connector (USB-A - Device Charging, The white USB connector)

- Make sure you use the genuine cable for the tablet, smartphone, or USB device you are using.
- Charging may not be performed depending on the device's charging specifications.
- To set an optimum current value for charging the connected device, it may take several seconds before charging starts. Charging may stop temporarily immediately after the device is connected.
- If a device connected to the USB connector (USB-A Device Charging) has a rated power that exceeds the rated current of the USB connector, charging the device is stopped. See "Product Specifications" on page 119.
- The device may not be fully charged depending on its settings or usage conditions. For example, when the device is used with the screen brightness set to its maximum, and/or with the sleep function disabled.
- Seiko Epson Corporation assumes no responsibility for economic damages or problems arising from failure of charging the connected device due to a failure or malfunction of the product.
- It may be hard to disconnect some types of USB cable. Do not forcibly pull the cable, or the USB connector and USB cable may be damaged. Contact qualified service personnel if you encounter the trouble.
- To communicate with a tablet computer via Bluetooth while charging the tablet through the USB connector (USB-A - Device Charging) on the printer, set the "Interface selection" setting to "Bluetooth only". For more details, see "Software Setting Mode (Customize Value Settings)" on page 96. However, if you do so, the maximum supply current is limited up to 2.1 A for an iOS tablet, and up to 1.5 A for an Android tablet. Charging may not be possible depending on the tablet. Please use the tablet after testing and evaluating it adequately.
- When connecting an Android device to the USB connector (USB-A - Device Charging) for data communication, make sure that the device satisfies the following requirements.
  Requirements: The version of Android OS is 10 or later with kernel version 4.9.15 or later
  However, Epson does not guarantee normal operation of all Android devices even if they satisfy the requirements. Run some tests before actually using the device.
- If the printer is connected to a wired network, an iOS tablet connected to the printer via the USB connector can access the network through the Lightning to USB cable. For more details, see "Network Tethering (iOS device only) (For Device charging model/Bluetooth model)" on page 107.

Online and Offline

Online

The printer is online and ready for normal printing unless there is a reason to go offline.

Offline

The printer automatically goes offline under the following conditions:

- While the printer power is turning on/off
- During the setting and check modes operating (except the hexadecimal dumping mode)
- While roll paper is fed using the Feed button
- When the printer stops printing due to a paper end (when the paper out detector detected the paper out)
- During an operation standby state
- When an error has occurred (See "Status and Errors" on page 20.)
- While the roll paper cover is open

Status and Errors

The status of the printer is indicated by lit and flashing LEDs.

CAUTION	You cannot print when an error has occurred.

Status Display

●: OFF ○: ON ☼: Flashing -: Ignore the LED light

Bluetooth LED	Wi-Fi LED	Ethernet LED	Paper LED	Error LED	Power LED	Printer Status
-	-	-	●	●	○	Online
○	○	○	○	○	○	While initializing after turning on the power
●	●	●	-	●	○	During a self-test
●	●	●	☼*1	●	○	Waiting for the self-test to continue
-	-	-	-	●	○	While feeding paper using the Feed button
-	-	-	☼*1	●	○	Waiting for a Macro execution to run
-	-	-	-	○	○	Roll paper cover open while not printing
-	-	-	○	○	○	No roll paper
			☼*4	●	○	Waiting for printed paper to be removed
-	-	-	-	○	○	Automatically Recoverable Errors
-	-	-	-	●	☼*3	A warning about TM-Intelligent function NOTE: Unable to connect to the server. Check the status of the destination server configured by TM-Intelligent function.
-	-	-	-	○	○	Recoverable Errors
●	●	●	-	☼*1	○	Unrecoverable Errors CAUTION: Turn off the power immediately when an unrecoverable error occurs. If the same error occurs again even after turning the power back on, contact qualified service personnel.
-	-	-	-	☼*1 5 sec	○	The connected device can only be charged through the USB port.
-	-	-	-	☼*2 5 sec	○	Connected through a USB hub.
●	●	●	●	●	☼*1	Updating firmware
●	●	●	☼*1	●	☼*1	While forced updating firmware mode is on

Bluetooth LED	Wi-Fi LED	Ethernet LED	Paper LED	Error LED	Power LED	Printer Status
●	●	●	●	○	☼*1	During turn-off process
●	●	●	●	●	☼*2	During power off NOTE: When a power off command is executed. When turning off the printer without using the power button, using the command is recommended because doing so reliably saves printer operating status information.
-	-	-	-	-	○	Starting up the network firmware
-	-	-	☼*1	○	○	Waiting for the roll paper cover to be closed to print a status sheet.

*1: The Power LED flashing pattern is: lighting for 320 ms followed by a pause for 320 ms.
*2: The Power LED flashing pattern is: lighting for 160 ms followed by a pause for 2400 ms.
*3: The Power LED flashing pattern is: lighting for 4960 ms followed by a pause for 160 ms.
*4: The Error LED flashing pattern is: lighting for 320 ms, pause for 320 ms, lighting for 320 ms, and pause for 1600 ms.

Network Connection Status

●: OFF ○: ON ☼: Flashing -: Ignore the LED light

Bluetooth LED	Wi-Fi LED	Ethernet LED	Paper LED	Error LED	Power LED	Printer Status
-	☼	☼	-	-	○	Starting the network firmware
-	●	●	-	-	○	Not connected to a network
-	●	○	-	-	○	Connecting via Ethernet
-	●	☼	-	-	○	Ethernet (An IP address has not been acquired)
-	○	●	-	-	○	Connecting via Wi-Fi
-	☼	●	-	-	○	Wi-Fi (An IP address has not been acquired)
☼	-	-	-	-	○	Waiting to be paired with a device
○	-	-	-	-	○	Connecting via Bluetooth
●	-	-	-	-	○	Not connected via Bluetooth

*The LED flashing pattern is: lighting for 320 ms followed by a pause for 320 ms.

Error Status

There are three possible error types: automatically recoverable errors, recoverable errors, and unrecoverable errors.

NOTE	The error codes can be checked on TM-L100 Utility. When contacting qualified service personnel for help, inform the personnel of the error code to troubleshoot the problem quickly.

Automatically Recoverable Errors

Printing is not possible if an automatically recoverable error occurs. You can restore the printer to a normal state by the following methods.

Error (Error code)	Description	Recovery
Head temperature error (2AA23)	Head temperature exceeded the proper range.	The printer recovers from the error when the head temperature drops.
Cover open error (in the middle of printing) (3DA11)	The roll paper cover was opened during printing	The printer recovers from the error when the roll paper cover is closed.
Paper error (black mark detection error) (2BD31)	Paper with black marks is selected, but no black mark is detected.	Reload the paper with black marks, or change the setting if you do not use paper with black marks.

Recoverable Errors

Printing is not possible if a recoverable error occurs.

Error (Error code)	Description	Recovery
Autocutter error (3CA21)	Abnormal auto cutter operation was detected.	The printer recovers from the error when jammed paper or foreign materials are removed and then the roll paper cover is closed. When the [Method for canceling recoverable error (cutter error)] has been set to [Command only], perform one of the following after removing jammed paper or foreign materials and close the roll paper cover. - Turn off and then back on the printer - Send an error recovery command
Paper layout error (3BD41)	Black mark cannot be detected in the range specified as black mark interval.	The printer recovers from the error when the cause of the error is removed, and then turned on and back on, or receives an error recovery command. Before reloading the paper, check that the black mark interval setting matches with the black marks on the paper.

Unrecoverable Errors

The printer cannot print when an unrecoverable error occurs. Turn the printer off and then back on. If the error still occurs, the printer may be defective. Contact qualified service personnel.

Error (Error code)	Description
High voltage error (AKA41)	Abnormal power supply voltage (high voltage) was detected.
Low voltage error (AKA42)	Abnormal power supply voltage (low voltage) was detected.
Unrecoverable error (A9999)	Other unrecoverable error is detected.

NV Memory (Non-Volatile Memory)

The printer's NV memory stores data even after the printer power is turned off. NV memory contains the following memory areas for the user:

- NV graphics memory
- User NV memory
- Memory switches (customized values)
- R/E (Receipt Enhancement)
- Maintenance counter

CAUTION	As a guide, NV memory rewriting should be used 10 times or less a day when you program applications.

NV Graphics Memory

Graphics, such as shop logos to be printed on receipts, can be registered.

To register your graphics data, use TM-L100 Utility or ESC/POS commands.
You can check registered graphics data using TM-L100 Utility, TM Utility, or by printing the data in the NV graphics information print mode.

User NV Memory

You can store and read text data for multiple purposes, such as for storing a note including customizing or maintenance information of the printer.

Memory Switches (customized values)

With the memory switches, which are software switches for the printer, you can configure various settings of the printer. For information about the memory switch, see "Software Settings" on page 78.

R/E (Receipt Enhancement)

You can set the graphics data, such as a shop logo, registered in the NV graphics memory to be printed on the top of each receipt or to be printed on the bottom of each receipt just before the paper is cut.

To make the settings, use TM-L100 Utility, TM Utility, or ESC/POS commands.

You can check the settings using TM-L100 Utility, TM Utility, or by printing the settings information in the Receipt enhancement information print mode.

Maintenance Counter

With this function, printer information, such as the number of lines printed, the number of autocuts, and printer operation time after the printer starts working, is automatically stored in printer's memory. You can read the counter information to use it for periodical checks or part replacement.

NOTE

- You can also check the head running length and number of times of autocutting with the self-test. See "Self-test Mode" on page 93.
- The maintenance counter values are automatically saved in the NV memory usually every two minutes (up to four minutes). However, the values are not saved when the printer is in power-saving mode or when it is turned off without the use of the power button.

Useful Functions for Smart Devices (Device Charging model/Bluetooth model)

You can easily connect this product to the network by using the NFC tag built-in to the printer or the QR code printed on the status sheet.

NFC Tag

Bring a smart device that supports NFC close to the NFC tag to acquire the printer information (information for specifying the device).

By using the acquired information, the device can specify the printer to send a print job over a network or Bluetooth.

QR Code

Capture the QR code printed on the status sheet with the camera on your smart device to acquire the printer information (information for specifying the device).

By using the acquired information, the device can specify the printer to send a print job over a network or Bluetooth.

NOTE

- Programming using Epson ePOS SDK is required to use these functions. These functions are created by combining NFC touch and QR code capturing operations and the target printer specifications using Printer Easy Select API.
  See the "Epson ePOS SDK for Android/iOS User's Manual" and the Epson ePOS SDK sample program for more details. The sample program also contains a sample implementation method for reading an NFC tag and capturing a QR code.
- You can try a demo of these functions by using Epson TM Utility.

Setup

This chapter describes setup and installation of the product and peripherals.

Flow of Setup

This chapter consists of the following sections along with the setup flow of the product and peripherals.

1. Installing the Printer (page 28)

2. Changing the Paper Width (page 32)

3. Connecting Interface Cables (page 37)

4. Connecting the Optional Wireless LAN Unit (For Device charging model/ Bluetooth model) (page 40)

5. Connecting the Optional Customer Display (For Device charging model/ Bluetooth model) (page 41)

6. Connecting the Optional External Buzzer (page 42)

7. Connecting the Cash Drawer (page 43)

8. Connecting to the Power Source (page 45)

9. Connecting the Printer to the Host Devices (page 48)

Installing the Printer

The printer can be placed vertically or horizontally.

❏ Vertical installation ("Placing the Printer Vertically" on page 29)

When using strong full adhesive liner-free label paper, install the printer vertically and enable the Paper removal standby setting.

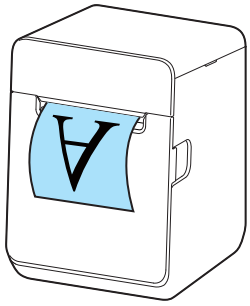

❏ Horizontal installation ("Placing the Printer Horizontally" on page 31)

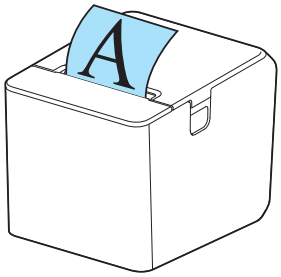

CAUTION

- Place the printer on a flat surface.
- Do not place the printer in locations subject to high dust levels.
- Be careful not to place cords or foreign substances under the printer.
- Take measures to prevent the printer from moving due to vibrations when using the cash drawer.
- Do not give a high impact on the printer during operation. Doing so may cause the print failure.

NOTE

- You can hang the printer on a wall by using the optional Wall Hanging Bracket Set (OT-WH30). Refer to the manual of the Wall Hanging Bracket Set for details.
- When you have set the printer to eject printed paper from the front side, you can flip printed pages upside down by enabling the "Batch rotate print (Upside Down)" function. For more details, see "Software Settings" on page 78.

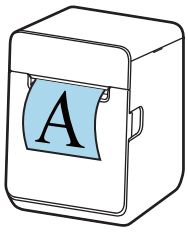

Placing the Printer Vertically

Attach the included four rubber feet and two pieces of fixing tape to the bottom of the printer.

1 **Lay the printer on its side.**

2 **Remove the release paper from the rubber feet.**

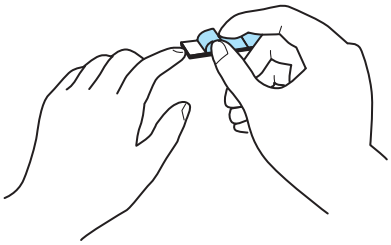

3 **Attach the rubber feet to the four positions on the bottom of the printer.**

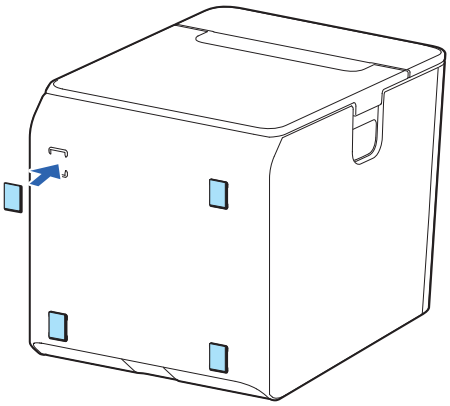

4 **Place the printer.**

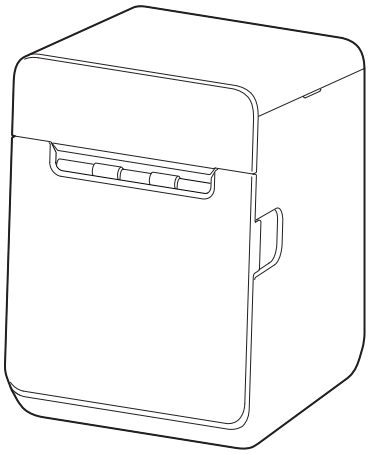

Securing the Printer to the Installation Surface

For vertical installation, use of the fixing tape is recommended to secure the printer to the installation surface.

1 **Lay the printer on its side.**

2 **Remove the release paper from one side of the fixing tape.**

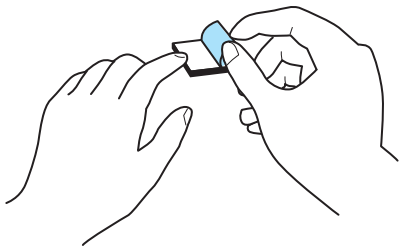

3 **Attach the fixing tape to the two positions.**

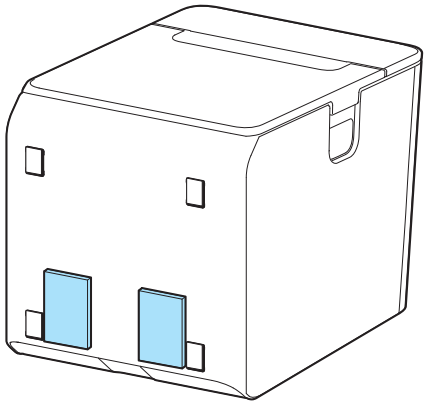

4 **Remove the other release paper from the fixing tape.**

5 **Place the printer on the installation surface, and then hold the printer down to secure it.**

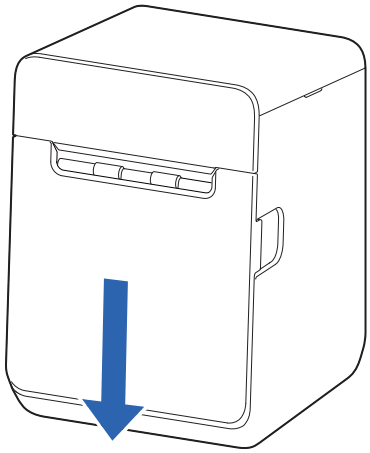

Placing the Printer Horizontally

Attach the included four rubber feet to the rear of the printer.

1 **Remove the release paper from the rubber feet.**

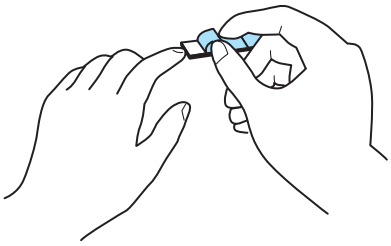

2 **Attach the rubber feet to the four positions on the bottom of the printer.**

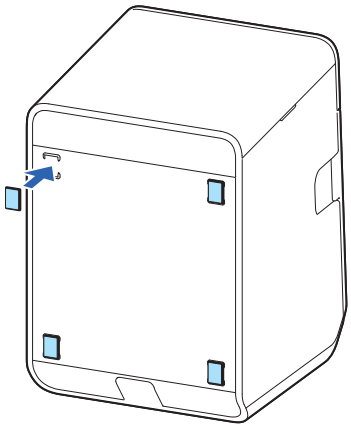

3 **Place the printer.**

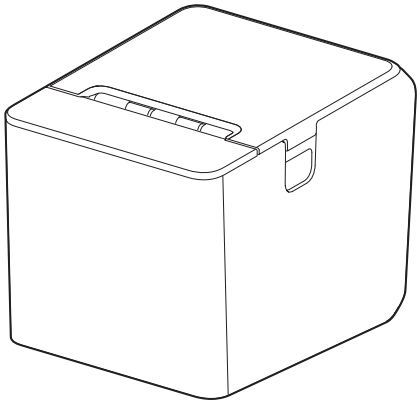

Changing the Paper Width

The printer allows you to use three widths roll paper.

The factory default setting is to use 58 mm width roll paper.

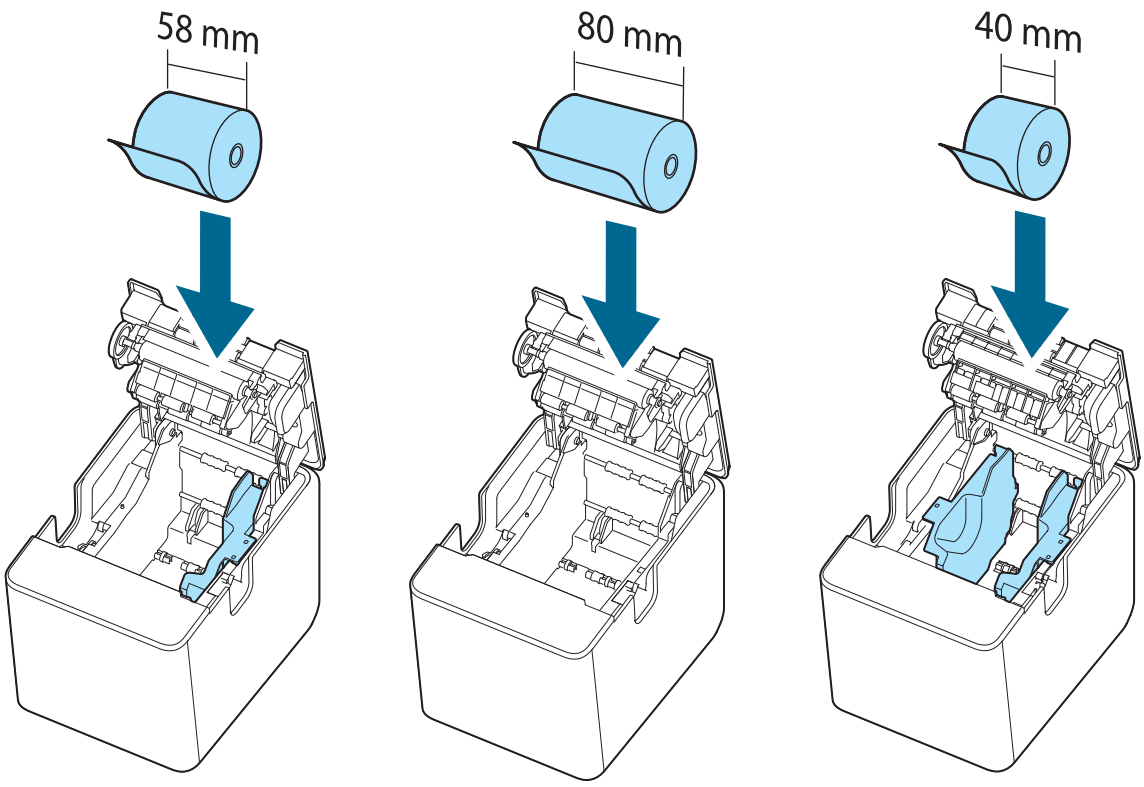

Attach 58-mm width roll paper guide to the right

(Default)

No roll paper guide

Attach 58-mm width roll paper guide to the right

Attach 40-mm width roll paper guide to the left

CAUTION

- You cannot change the paper width to a wider paper width after you have used the printer. Because parts of the print head that had not touched paper may be damaged by being rubbed against the platen roller, and the autocutter may have worn out.
- If you must change to a roll paper wider than the paper width in use, the software settings may need to be changed. For more details, see "Software Settings" on page 78.

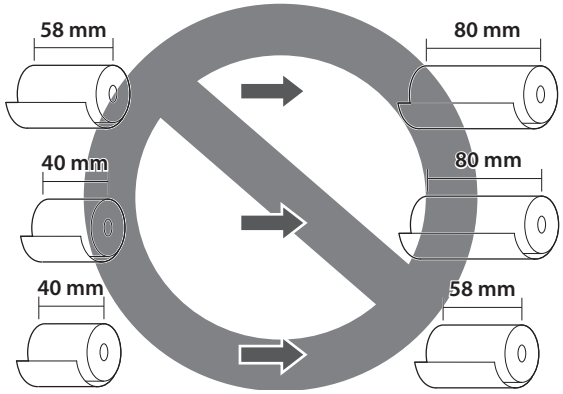

Using 58 mm Wide Roll Paper

Attach only the 58-mm width roll paper guide. This is the factory default.

Using 80 mm Wide Roll Paper

Remove all the roll paper guides.

Follow the procedure below to remove the 58-mm width roll paper guide.

1 **Lay the printer on its side.**

2 **Open the roll paper cover.**

"Opening/Closing the Roll Paper Cover" on page 64

3 **Remove the roll paper guide by pulling its tab up and toward you.**

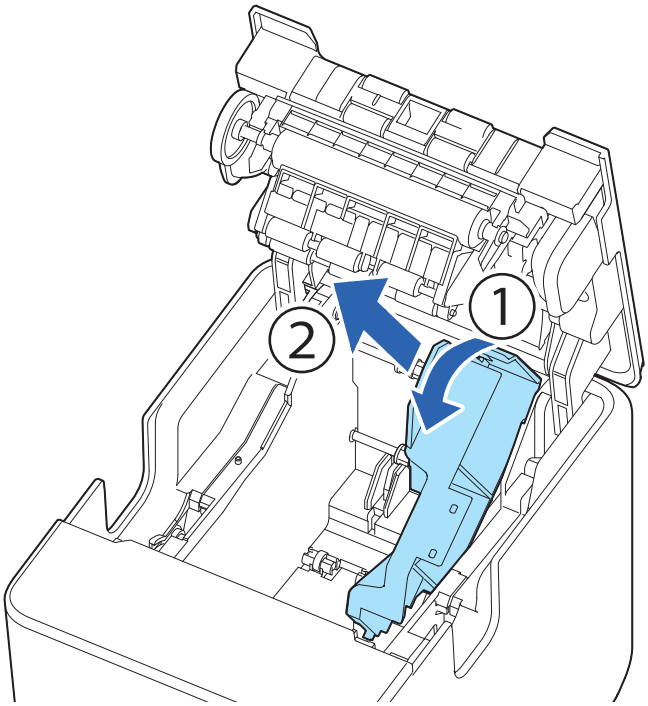

NOTE

- When you turn the printer on, the printer automatically changes the paper width setting to 80 mm. It is not necessary to change the setting by using TM-L100 Utility or other software.
- How to attach the 58-mm width roll paper guide
  Tilt the guide and insert its protrusion into the groove inside the printer, and then fit it into place. The pins on the printer fit into the positioning holes in the guide.

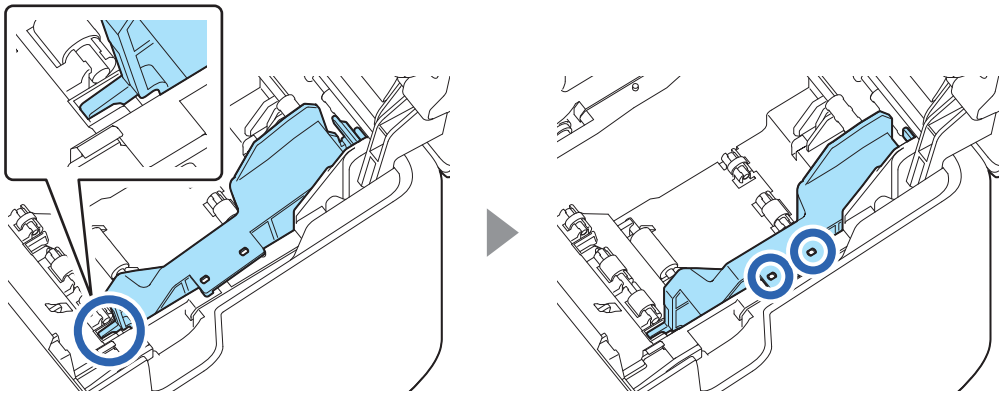

Using 40 mm Wide Roll Paper

Attach both the 40-mm and 58-mm width roll paper guides.

Follow the procedure below to attach the 40-mm width roll paper guide.

1 **Lay the printer on its side.**

2 **Open the roll paper cover.**

"Opening/Closing the Roll Paper Cover" on page 64

3 **Tilt the guide and insert its protrusion into the groove inside the printer, and then fit it into place.**

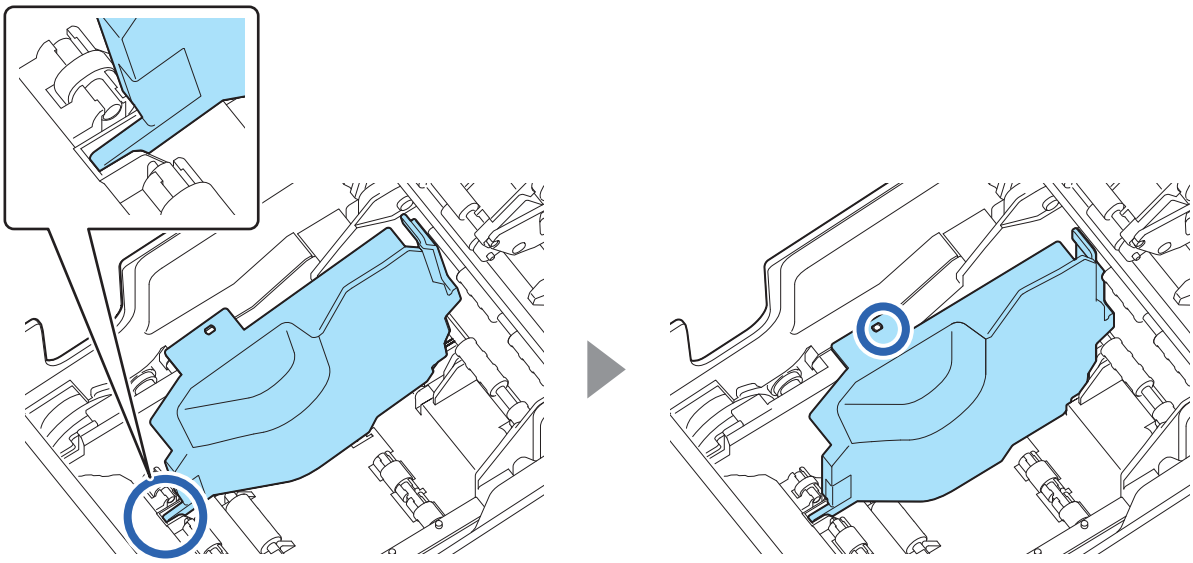

4 **By using TM-L100 Utility, change the paper width setting of the printer to 40 mm. For more details, see "Software Settings" on page 78.**

NOTE

How to remove the 40-mm width roll paper guide

- Remove the roll paper guide by pulling its tab up and toward you.
- If you must widen the paper width after setting it to 40 mm, the software settings must be changed. For more details, see "Software Settings" on page 78.

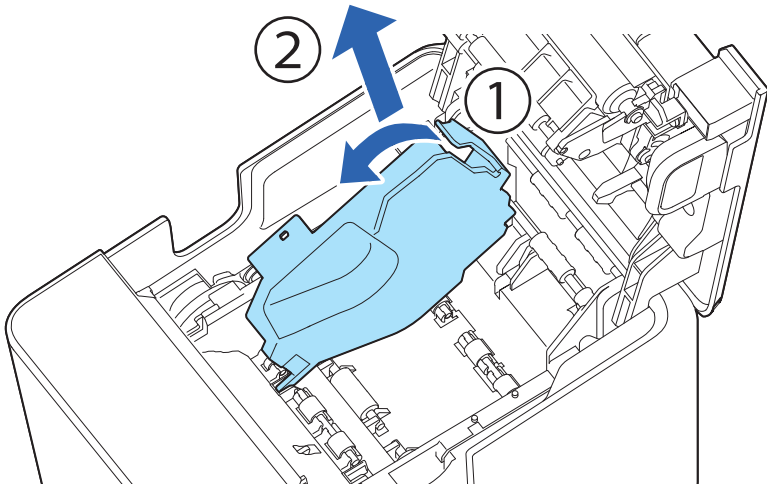

Connecting Interface Cables

Connect interface cables of a computer or peripheral devices to the connectors on the rear of the printer. The on-board connectors vary depending on the printer model.

1 **Lay the printer on its side.**

2 **Remove the rear cover.**

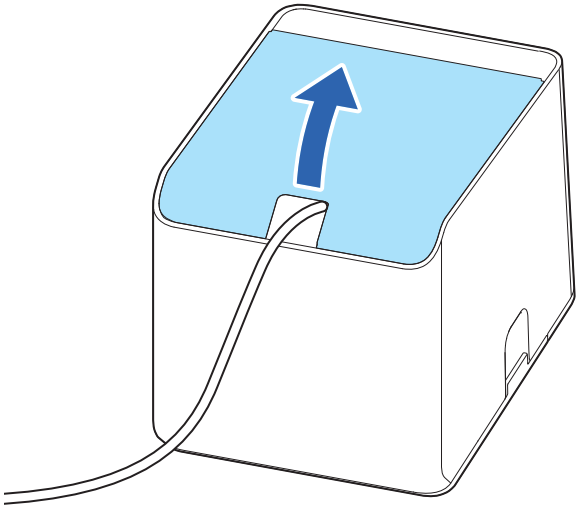

3 **Connect the interface cable to the appropriate connector.**

- Serial model

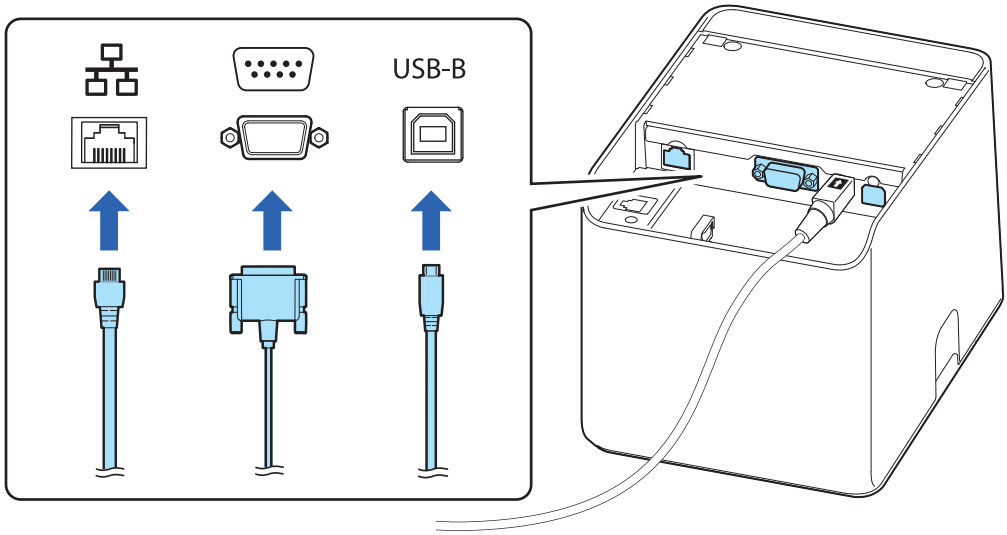

- Device charging model/Bluetooth model

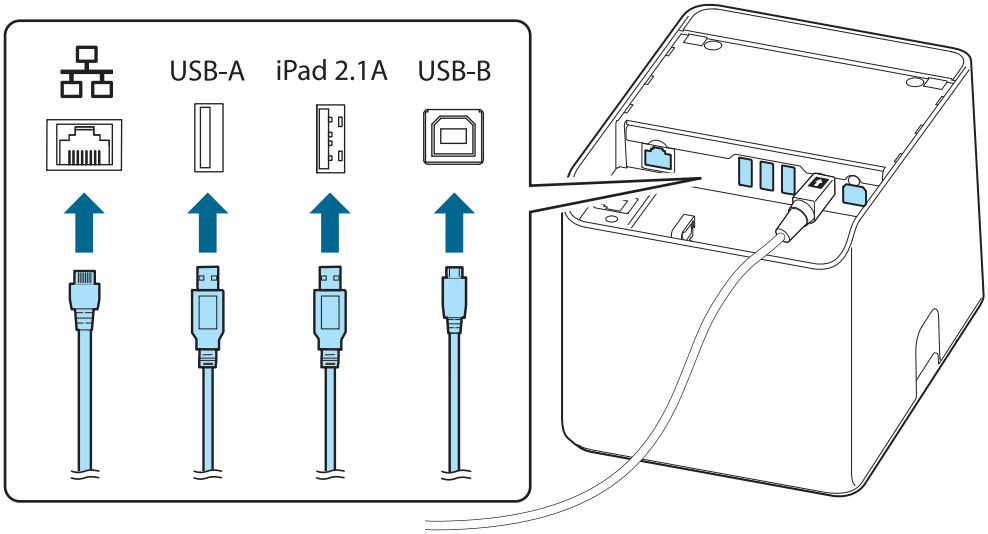

NOTE

When connecting a USB cable to the USB Type-B connector

By attaching the included locking wire saddle and pass the cable through the hook, you can prevent the cable from being unplugged.

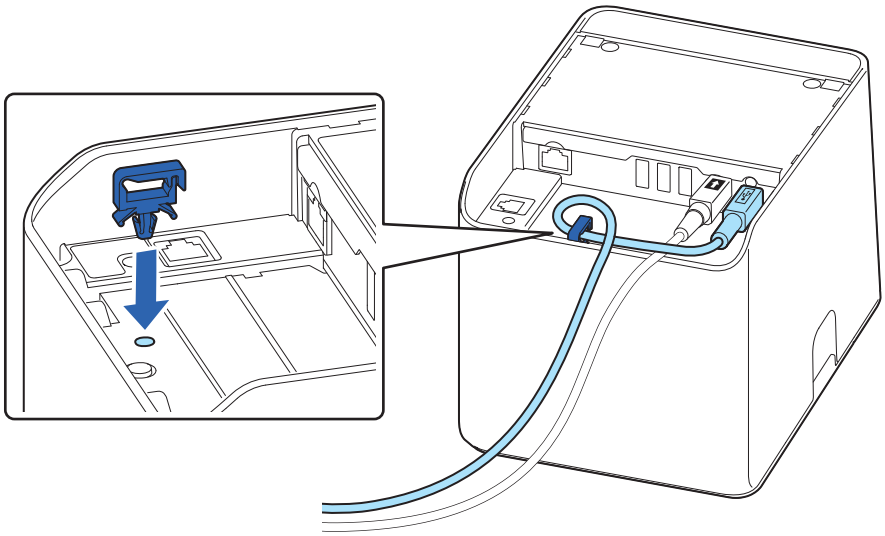

4 **Attach the rear cover. Pull out the Interface cable through the cutout of the rear cover.**

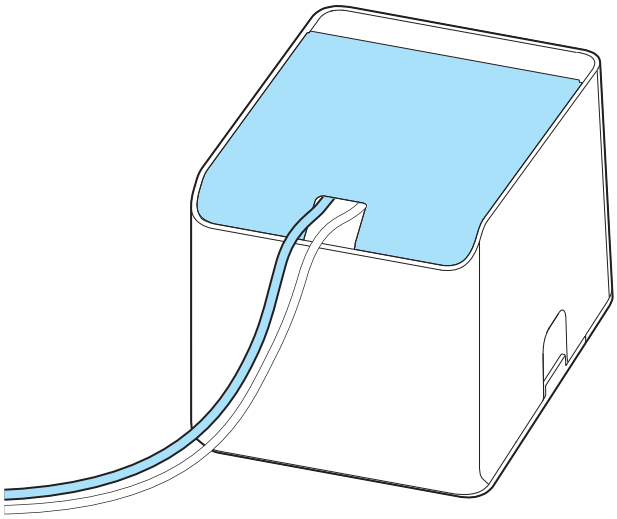

5 **Connect the interface cable to your computer or peripheral device.**

6 **Connect the AC cable plug to a power outlet.**

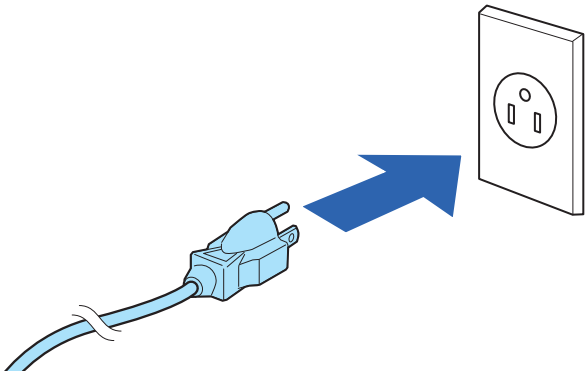

WARNING	Should a fault ever occur, immediately turn off the power to the printer and unplug the AC cable from the socket.

Connecting the Optional Wireless LAN Unit (For Device charging model/Bluetooth model)

The optional Wireless LAN unit (OT-WL06) enables you to use the product with a Wi-Fi connection.
Refer to the manual for the wireless LAN unit for instructions on how to connect it.

CAUTION	Be sure to turn off the printer when connecting the Wireless LAN unit.

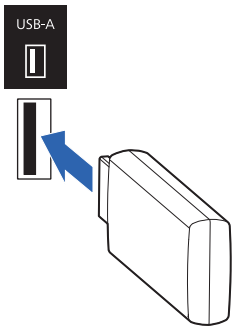

NOTE	If you connect the optional DM-D30 (customer display), you can connect the OT-WL06 directly to the DM-D30. For details, refer to the DM-D30 manual.

Connecting the Optional Customer Display (For Device charging model/Bluetooth model)

You can connect the customer display (DM-D30 or DM-D70) to this product, using USB connection.
Refer to the manual for the customer display for instructions on how to connect it.

CAUTION Be sure to turn off the printer when connecting the customer display.

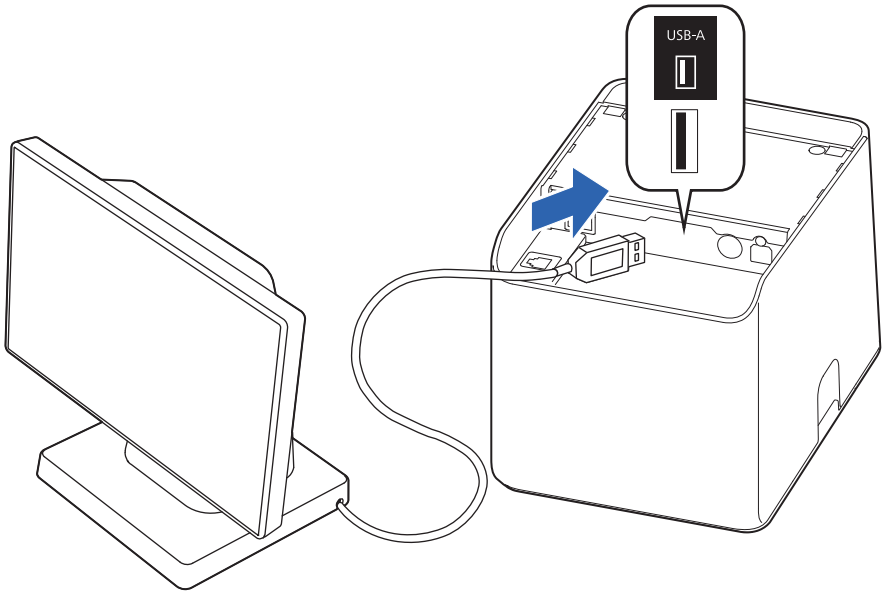

NOTE If you connect the DM-D30, you can connect the optional OT-WL06 (wireless LAN unit) directly to the DM-D30. For details, refer to the DM-D30 manual.

Connecting the Optional External Buzzer

When the optional external buzzer (model: OT-BZ20) is connected to the drawer kick connector of the printer, you can set the printer so that it beeps when you send commands, when an error occurs, when executed autocutting, and when detected paper end. Settings for sound patterns and frequency depending on the occasions the buzzer beeps are also available.

You need to set with the memory switch (customized values) for buzzer enable/disable setting, sound pattern setting, and frequency setting. For information about the memory switch (customized values), see "Software Settings" on page 78.

CAUTION

- Be sure to turn off the printer before you connect/disconnect the optional external buzzer.
- Do not connect both the optional external buzzer and the cash drawer to the printer at the same time by using a branched connector.

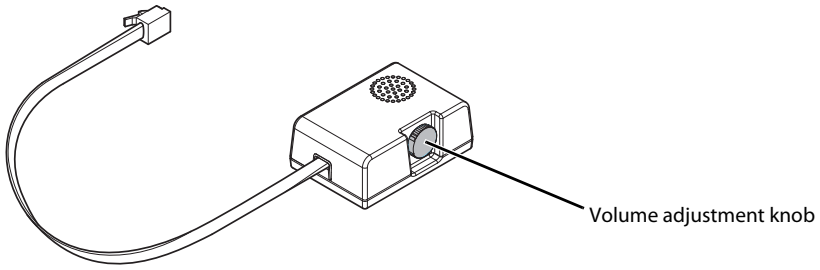

Attachment Position

The optional external buzzer is recommended to be installed in the following positions.

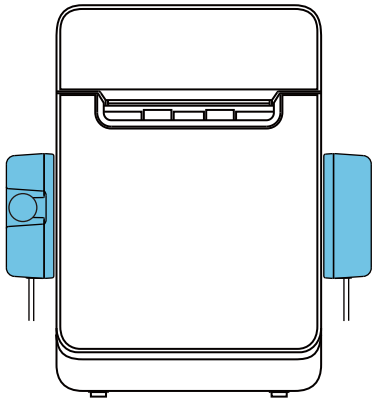

Vertically placed printer
(Viewed from the front)

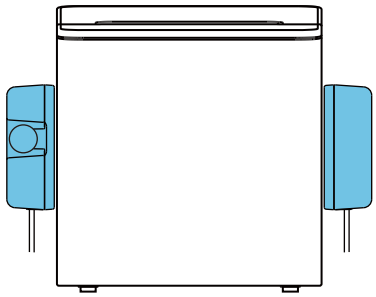

Horizontally placed printer
(Viewed from the front)

CAUTION

- Do not install the optional external buzzer at the roll paper exit.
- To prevent liquid from entering inside, it is recommended to install the optional external buzzer so that the volume adjustment knob is positioned sideways or downward.

Connecting the Cash Drawer

CAUTION

- Do not connect both the optional external buzzer and the cash drawer to the printer at the same time by using a branched connector.
- When using a cash drawer, make sure to set “Select Buzzer” to “Disabled” or “Built-in buzzer” (see "Software Settings" on page 78).
- Two driver transistors cannot be energized simultaneously.
- Leave intervals longer than 4 times the drawer driving pulse when sending it continuously.

Required specifications of cash drawers

Specifications of drawers differ depending on makers or models. When you use a drawer other than specified, make sure its specification meets the following conditions.

Otherwise, devices may be damaged.

- The load, such as a drawer kick solenoid, must be connected between pins 4 and 2 or pins 4 and 5 of the drawer kick connector.
- When the drawer open/close signal is used, a switch must be provided between drawer kick connector pins 3 and 6.
- The resistance of the load, such as a drawer kick solenoid, must be 24 Ω or more or the input current must be 1A or less.
- Be sure to use the 24V power output on drawer kick connector pin 4 for driving the equipment.

Drawer Connection Diagram

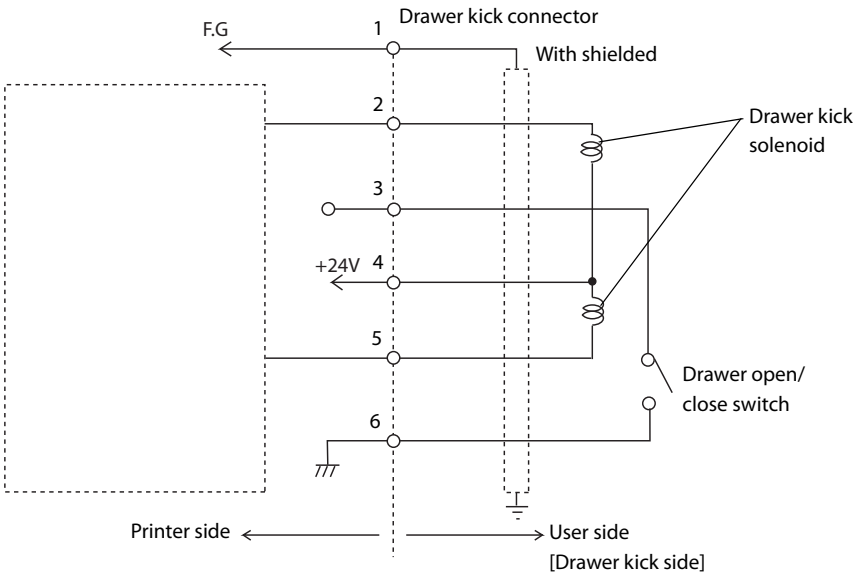

Adaptable Connector

RJ12 modular connector

Pin assignments

Pin number	Signal name	Direction
1	Frame GND	-
2	Drawer kick drive signal 1	Output
3	Drawer kick open/close signal	Input
4	+24 V	-
5	Drawer kick drive signal 2	Output
6	Signal GND	-

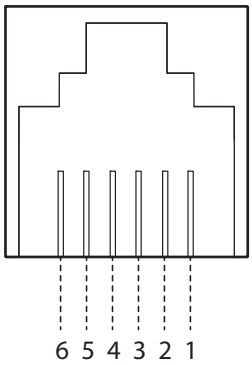

Connecting the drawer kick cable

WARNING

- **Use a shield cable for the drawer kick cable.**
- **When using cash drawer, make sure to use the power supply for printer (connector pins 4).**
- **Do not insert a telephone line into the drawer kick connector.**
  Doing so may damage the telephone line or printer.

Connect the drawer kick cable to the drawer kick connector by pressing firmly until the connector clicks into place.

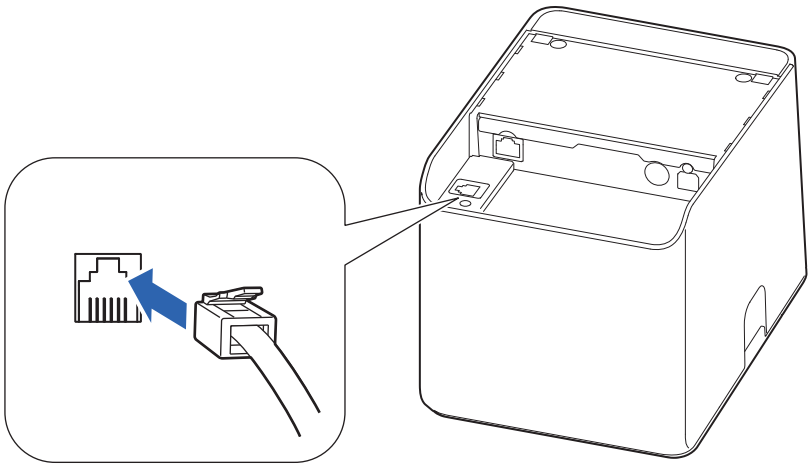

Connecting to the Power Source

Connect the AC adapter to supply power to the printer.

WARNING

- **Be sure to use the specified AC adapter PS-190 (Model: M368A) only. Using another AC adapter may result in causing fire or shock.**
- **Be sure to use the AC cable that came with the printer.**
- **Never insert the AC cable plug into a socket that does not meet the input voltage of the AC adapter. Doing so may result in damage to the printer.**
- **Should a fault ever occur, immediately turn off the power to the printer and unplug the AC cable from the socket.**

Connecting the AC Adapter

1 **Make sure the printer is turned off.**

2 **Connect the AC cable to the AC adapter.**

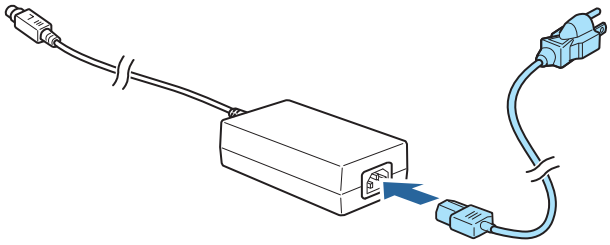

3 **Lay the printer on its side.**

4 **Remove the rear cover.**

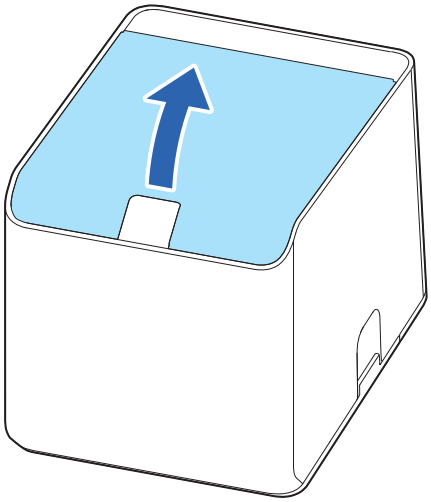

5 Connect the DC cable of the AC adapter to the power supply connector.

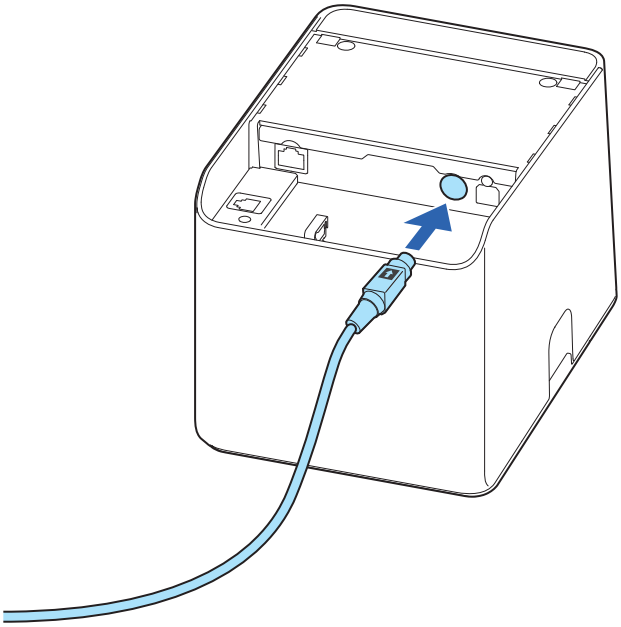

NOTE

How to disconnect the DC cable

Make sure that the AC cable is not connected, and then hold the arrow-printed portion of the connector to pull it straight out.

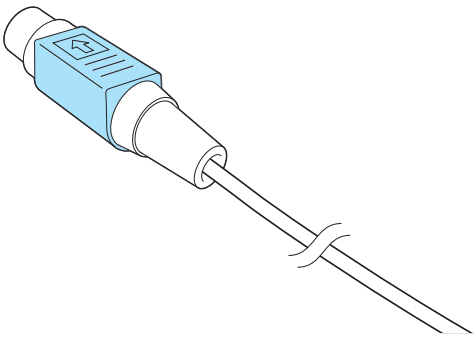

6 Attach the rear cover. Pull out the DC cable through the cutout of the rear cover.

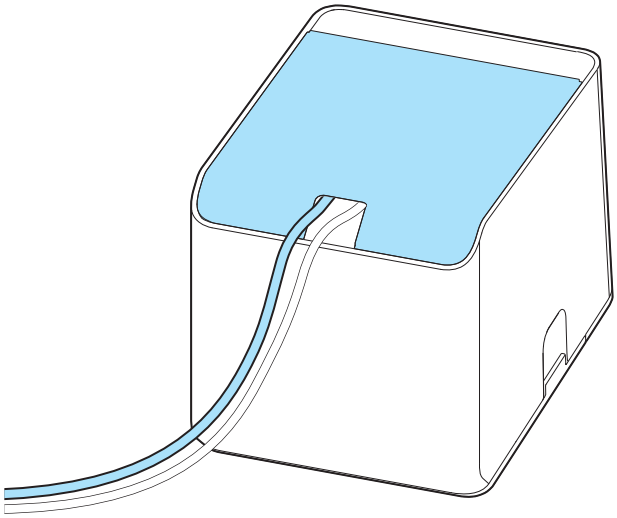

7 **Connect the AC cable plug to a power outlet.**

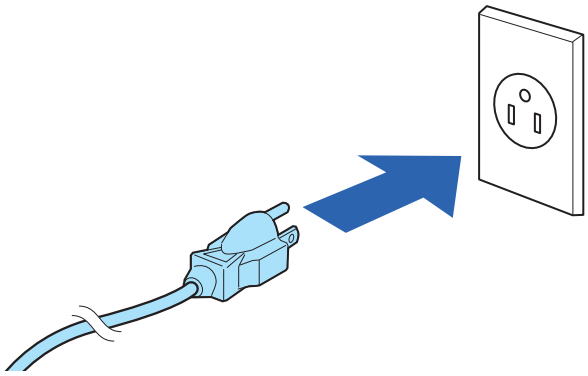

Connecting the Printer to the Host Devices

USB Interface

When using USB cable to connect with host device, connect the USB cable to the printer, and after starting the host device, turn the printer on.

> **CAUTION** Do not place any weight or stress on the cable when using. Doing so could damage the cable and connectors.

Ethernet Interface

Use an Ethernet cable to connect the printer to network via a hub.

Setup using EpsonNet Config (Web version)

You can open the web application installed in the printer from a web browser and configure the network settings.

Since the application is opened by specifying the IP address of the printer, the computer to be used must be set to the same network segment as the printer.

Follow the steps below to start up EpsonNet Config (Web version), and check or change the settings.

> **CAUTION**
> - When setting up using EpsonNet Config (web version), the network settings of the device to be used must be set to the same network segment as the printer.
> - The default IP address of the printer is set to an address assigned by a DHCP server. Please make sure that the IP addresses assigned by the DHCP server do not conflict, as setup cannot be performed if multiple IP addresses conflict on a single network. If there is no DHCP server, a fixed IP address (192.168.192.168) will be set in about one minute after power-on. Note that if the Ethernet cable is not connected, these processes will be executed after the Ethernet LAN cable is connected.
> - If a DHCP server is available, a determined IP address will be printed automatically. However, it is not printed if the wired LAN cable is not connected or the wireless LAN unit is not connected.

1 **Connect the setting computer and the printer to the same network.**

2 **Change the network settings on the computer so that it has the same segment as the IP address of the printer.**

Subnet mask: Same subnet mask as the printer

IP address: Same segment (same network address) as the printer, different host address

Check the values set in the printer on the status sheet.

E.g.)

	Printer	Setting computer
Subnet mask	255.255.255.0	255.255.255.0
IP address	192.168.192.168	192.168.192.2

3 **Start up your Web browser and input the printer's IP address into the address field.**

E.g.) http://192.168.192.168

NOTE	When accessing EpsonNet Config (web version) from your browser for initial setup, an authentication warning message will be displayed, but this is not a problem.

4 **Input your user name and password on the authentication window.**

The user name is “epson”.

For the default password, see "Default Password for Setup / Default Passphrase for SimpleAP" on page 138".

5 **Change the settings based on the network setting information you received from the network administrator.**

Select an item from [Configuration] menu and change the setting.

6 **After changing the necessary parameters, click the [Send] button.**

The changes are sent to the printer.

7 **Click the [Reset] button on the Web page displayed after sending.**

The sent contents are enabled.

Depending on the changes, such as the IP address, the connection with the setting computer may be lost and the EpsonNet Config window may not be displayed. To connect again, the network settings of the setting computer must be set to the same network segment as the printer whose settings were changed.

Setup using TM-L100 Utility

Prepare the following items.

Computer: Windows 11/10/8.1/8/7

USB cable: With a Type B connector required for connecting to the printer

Setup utility: TM-L100 Utility

1. **Connect the printer to the computer with a USB cable.**
2. **Turn on the computer.**
3. **Turn on the printer.**
4. **Start TM-L100 Utility.**
5. **Select the printer and click [OK].**
   If the printer does not appear, click the [Add Port] button to add the USB-connected printer.
6. **Use the [Network] menu to configure the network settings.**
   For details on the settings, refer to the TM-L100 Utility manual.
7. **After completing the settings, turn off the printer.**

Network settings of the printer is completed.

Wireless LAN Interface (With OT-WL06) (For Device charging model/Bluetooth model)

You can connect via SimpleAP or via LAN or USB cable and use the network configuration tool to configure the wireless LAN settings. For setting up wireless LAN settings for multiple printers, connect them with a LAN or USB cable and use Epson Deployment Tool.

You can also easily connect the printer to the network from your iOS or Android device using the Epson TM Utility.

CAUTION

- When using wireless LAN, make sure you disconnect the LAN cable. If a LAN cable is connected, wireless LAN is disabled.
- When you set up the access point at the same time, set the access point in advance and check that it operates correctly.
- Examine the radio wave situation in the surrounding area before use.
- Avoid using the same channel that is used in the neighboring shops where Wireless LAN is used.
- Wireless LAN with a frequency band of 2.4 GHz may interfere with Bluetooth communication. When using Bluetooth and Wi-Fi at the same time, it is recommended to use 5 GHz.
- When using the printer in environments where kitchen microwaves and other devices that may interfere radio waves are installed, observe the following points.
  * Keep the printer away from the devices that may cause radio wave interference.
  * Use channels that are away from the frequency bands that may cause radio wave interference.
  * Place shields between the printer and the devices that may cause radio wave interference.
  * Select either 2.4 GHz or 5 GHz, whichever is free from radio wave interference.
  * In auto channel setting for the access point, do not select a channel in which the devices may cause radio wave interference.

SimpleAP mode

This printer comes with a mode (SimpleAP) that allows printers to connect with a smart device or a computer without requiring a wireless access point. This allows you to easily setup a wireless LAN for the printer by using a printer settings tool (TM-L100 Utility, Epson TM Utility) even without a network environment such as access points.

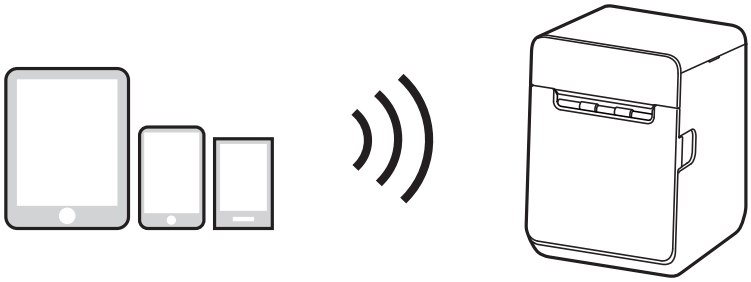

When the wireless LAN settings of the printer have not been changed from the factory default, and the printer is turned on, the printer automatically enters the Simple AP mode and prints the following information. If you have changed the wireless LAN settings from the factory default, start the printer according to the settings to connect the printer to an access point.

"Interface Setup Mode (Interface Setup)" on page 99

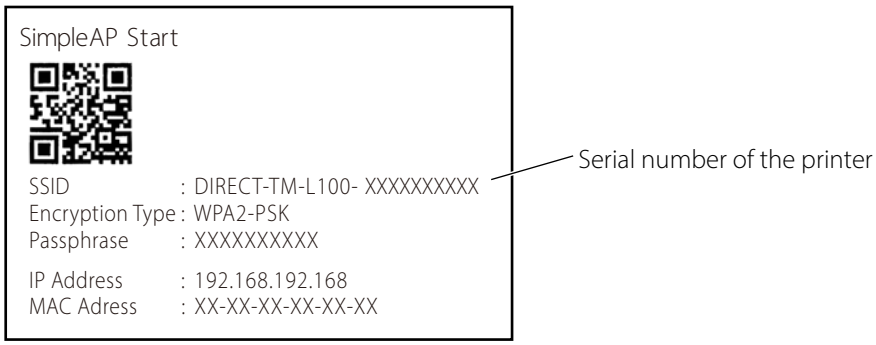

Setup using a Computer connected with a USB Cable

Prepare the following items.

- Computer: Windows 11/10/8.1/8/7
- USB cable: With a Type B connector required for connecting to the printer
- Setup utility: TM-L100 Utility

1 **Connect the wireless LAN unit to the printer.**

2 **Connect the printer to the computer with a USB cable.**

3 **Turn on the computer.**

4 **Turn on the printer.**

5 **Start TM-L100 Utility.**

6 **Select the printer and click [OK].**
If the printer does not appear, click the [Add Port] button to add the USB-connected printer.

7 **Use the [Network] menu to configure the network settings.**
For details on the settings, please refer to the TM-L100I Utility manual.

8 **After completing the settings, turn off the printer.**

Network settings of the printer is completed.

Setup using a Computer connected using SimpleAP

Prepare the following items.

- Computer: Windows 11/10/8.1/8/7 (A computer with wireless LAN capability)
- Setup utility: TM-L100 Utility

1 **Connect the wireless LAN unit to the printer.**

2 **Turn on the computer.**

3 **Start the printer in the SimpleAP mode.**
The printer prints SSID and QR code.
"SimpleAP mode" on page 52

4 **Start TM-L100 Utility.**

5 **Connect the printer using SimpleAP.**
Select [Add Port] - [Network], and then click [Connect with SimpleAP] to add the printer.

6 **Use the [Network] menu to configure the network settings.**
For details on the settings, refer to the TM-L100 Utility manual.

7 **After completing the settings, turn off the printer.**

Network settings of the printer is completed.

Setup using iOS Device connected with a Lightning cable

Prepare the following items.

- iPhone or iPad: iOS12 or later
- Setup utility: Epson TM Utility
- USB cable: Lightning to USB cable

1 **Connect the wireless LAN unit to the printer.**

2 **Connect the iPhone or iPad to the printer with the Lightning to USB cable.**
Connect the cable to the USB-A - Device Charging connector on the printer.

3 **Turn on the iPhone or iPad.**

4 **Turn on the printer.**

5 **Start Epson TM Utility.**

6 **Select the printer.**

7 **Select [Change printer settings] to configure the network settings.**

8 **When the settings are complete, exit Epson TM Utility.**

9 **Turn off the printer.**

Wireless network settings of the printer is completed.

Setup using an Android Device connected with a USB Cable

Prepare the following items.

- Android device: Android 4 or later
- Setup utility: Epson TM Utility
- USB cable: USB cable that can connect to USB connector (USB-A - Device Charging)*1
  USB cable that can connect to USB connector (Type-B)

*1: For more details on connecting an Android device to the USB connector (USB-A - Device Charging), see "Connectors" on page 16.

1 **Connect the wireless LAN unit to the printer.**

2 **Connect the Android device to the printer with the USB cable.**
Connect the cable to the USB-A - Device Charging or Type-B connector on the printer.

3 **Turn on the Android device.**

4 **Turn on the printer.**

5 **Start Epson TM Utility.**

6 **Select the printer.**

7 **Select [Change printer settings] to configure the network settings.**

8 **When the settings are complete, exit Epson TM Utility.**

9 **Turn off the printer.**

Wireless network settings of the printer is completed.

Setup using a Smart Device connected using SimpleAP

Prepare the following items.

- Smart device: iOS 12 or later/Android 8 or later
- Setup utility: Epson TM Utility

1 **Connect the wireless LAN unit to the printer.**

2 **Turn on the smart device.**

3 **Start the printer in the SimpleAP mode.**
The printer prints SSID and QR code.
"SimpleAP mode" on page 52

4 **Start Epson TM Utility.**

5 **Run [Wi-Fi Setup Wizard].**

6 **Following the on-screen instructions, scan the printed QR code and connect the printer with SimpleAP.**

7 **Configure the network settings following the on-screen instructions.**

8 **When the settings are complete, exit Epson TM Utility.**

9 **Turn off the printer.**

Wireless network settings of the printer is completed.

Bluetooth Interface (For Bluetooth model)

Pair the printer with your device using the Bluetooth function of the device or using other methods.
Pairing the printer is also possible by using EPSON TM Bluetooth Connector (Windows) or Epson TM Utility.

CAUTION

- If the host computer and the printer are not connected on a continuous basis but rather connected every time the printer starts printing, some time may be needed for the printer to actually start printing after the host computer commands printing. This pause is the time required for processing the connection between the host computer and the printer, and it depends on the conditions of the environment where used.
- If data transfer from an application of the host computer has already been completed, data might remain in the Bluetooth module internal buffer. As such data remaining in the buffer might be lost when the connection is cut off, use the status or similar functions to check that transmitted data has been completely printed before cutting off the wireless connection.

NOTE

- For detailed information about EPSON TM Bluetooth Connector, see the TM Bluetooth Connector User's Manual.
- The device name and passkey are editable with the TM-L100 Utility or Epson TM Utility.
- The Bluetooth security level has been set to "Middle" by default. For information on the Bluetooth security settings, see "Interface Setup Mode (Interface Setup)" on page 99.
- This printer automatically restores the connection when the Bluetooth connection with the iOS device is lost (Auto Re-Connect iOS function). For more details, see "Auto re-connect to iOS device (Bluetooth model)" on page 99.
- The pairing information of up to 8 devices can be registered. (Multi-pairing is supported.)
  If the maximum number is exceeded, the oldest pairing information will be discarded.
- Only one device can be connected at a time. (Multi-point connection is not supported.)

Setting up using Bluetooth Paring Function of OS

Normally, you should use the Bluetooth pairing function of the OS (Android/iOS/iPadOS/Windows) of the computer or smart device you are using to connect to the printer.

1 **Turn on your computer or smart device.**

2 **Turn on the printer.**

3 **Print the status sheet.**
"Printing a Status Sheet" on page 103

4 **The printer goes into pairing standby mode (the Bluetooth LED starts flashing) and stays in the mode for about one minute.**
Execute the Bluetooth pairing function of the computer or smart device.

5 **Complete the pairing.**

Setting up from a Smart Device

Necessary Items

Prepare the following items.

- Device for setting: iOS or Android device
- Setup utility: Epson TM Utility

Running Epson TM Utility

1 **Run the Epson TM Utility.**

2 **Set from "Bluetooth Setup Wizard" in the menu.**
Follow the on-screen instructions to complete the setup.

Setting up from a Windows Computer

Follow the procedure below to make the settings.

1 **Have a Bluetooth wireless technology compatible computer ready.**
Make sure you have installed TM Bluetooth Connector.

2 **Turn on the printer.**

3 **Start TM Bluetooth Connector.**

4 **Select [Search all printers around this computer], and then click [Search].**

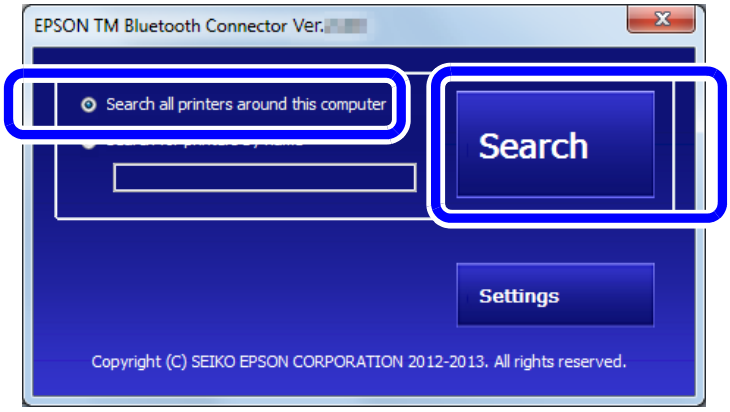

> **NOTE**
>
> If the printer has not detected after clicking the Search button, check the manufacturer of the Bluetooth software.
> 1. Open the Control Panel.
> 2. In the search box on the Control Panel, enter "Bluetooth", and then click Change Bluetooth settings.
> 3. In the Bluetooth Settings dialog box, click the Hardware tab, and then search for the Microsoft Bluetooth Enumerator. If it is not found, the Bluetooth software cannot detect the Epson Bluetooth printer, and you may not be able to connect to the computer.

5 **Select the printer to be paired, and then click [Connect].**

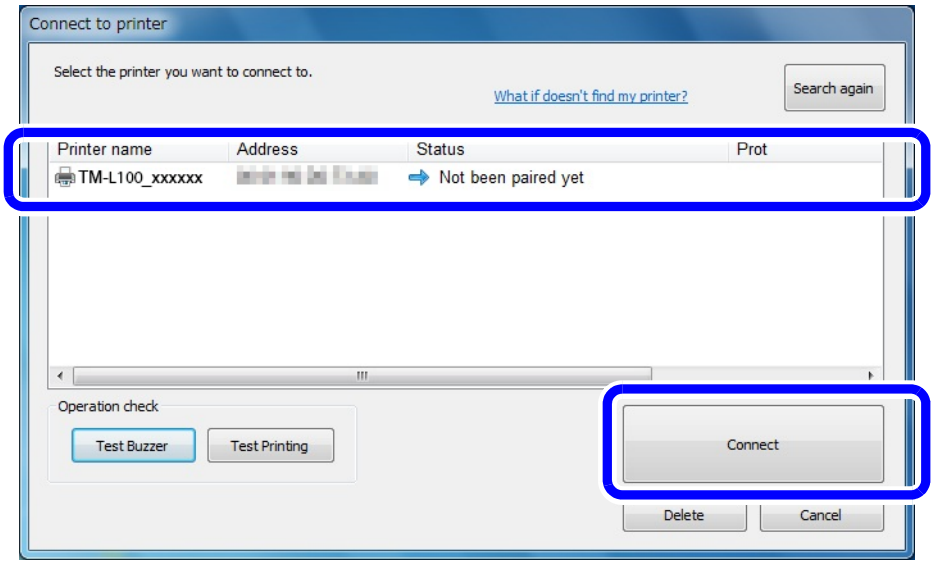

6 **If the window to enter a passkey appears, enter a passkey and click [OK].**

7 **Select the port to be used from the pull-down list, and then click [OK].**

8 **The "Connection complete" window appears. Click [Test Buzzer] or [Test Printing] to check operation.**

9 **Click [Back to Main screen] to return to the main window.**

10 Click the "x" button of TM Bluetooth Connector to exit.

NOTE

- If "Error" is displayed when you click the [Search] on the TM Bluetooth Connector, check whether:
  * The Bluetooth adapter is installed to the computer.
  * Bluetooth is ON in the Windows settings.
- If the device is not displayed on the TM Bluetooth Connector or the TM Bluetooth Connector Status shows " " after pairing.
  Check whether:
  * The printer is not turned on.
    Turn on the printer.
  * The printer is 10 m or further away from the computer.
  * Confirm that there is no other wireless device, such as a microwave oven and cordless telephone, that can interfere with the Bluetooth printer.
  * If the printer and the computer are placed in different rooms separated by a wall, move the printer and/or the computer in the same room.
  * The printer may not be detected when the search time is short. Try search again with longer search time.
  * While a computer and printer are communicating, the printer cannot be detected by other computers. Confirm that the printer to be detected is not communicating with any computer.

MAC Address Confirmation

You can check the printer's MAC address using the following procedures.

- Printing the status sheet
- A printer self-test (Only supported on Ethernet. For wireless, see the status sheet.)
- Using EpsonNet Config (Web version) that can be opened from a web browser

You can check the MAC address for network tethering using the following method.

- Printing the status sheet (MAC Address2)

Printing Using Multiple Interfaces

In models with multiple interfaces, you can use all interfaces without any limitations on which interface is to be used. You can use this function to temporarily connect a smart device to a nearby printer and print.

The printer provides each interface with an independent receive buffer and switches the active interface depending on the priority, while handling data in each receive buffer.

You can set one interface for the main connection. Data received from the main connection interface is handled with the highest priority.
By default, the interface that receives the first data transfer is set as the main connection interface; however, you can select the main connection interface in advance.

When the receive buffer for the active interface becomes empty and a preset time period (one second by default) has passed, switching to another interface is enabled, and an interface that receives print data becomes active.

CAUTION	When you do not use the Bluetooth function, set the Bluetooth security level to "Middle" or "High" to prevent unauthorized access to the printer over Bluetooth. You can change the security level by using Epson TM Utility, TM-L100 Utility, or in the Interface Setup mode.

NOTE	You can select the main connection interface and set the time to enable interface switching from the software settings. For details on software settings, see "Software Setting Mode (Customize Value Settings)" on page 96.

Handling

This chapter describes basic handling of the printer.

Turning the Power On/Off

Use the ⏻ power button to turn the printer on or off.

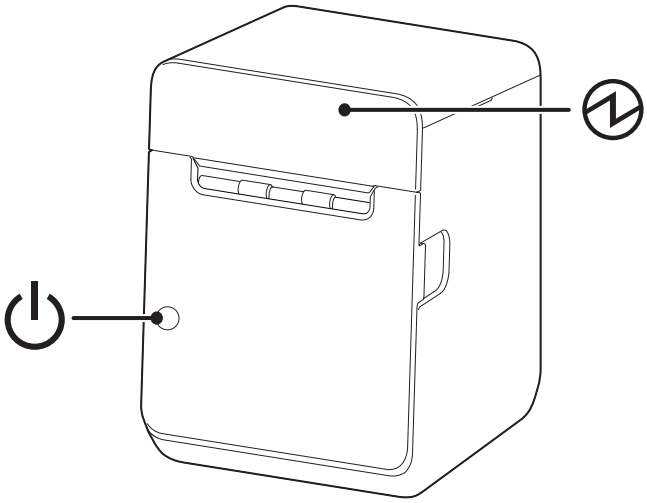

NOTE	You can turn the printer on and off by operating the breaker without using the power button. For more details, see "Precautions when Developing Applications" on page 117.

Turning the Power On

Hold down the ⏻ power button until the power LED turns on, then release the button.

NOTE

- The buzzer sounds when roll paper is not installed (when there is no paper).
  The sound stops when the roll paper cover is opened.
- The buzzer can also be set not to sound when there is no paper.
  In the buzzer settings, set [When the roll paper ends: frequency] to [Does not sound]. ("Software Settings" on page 78)

Turning the Power Off

Hold down the ⏻ power button until the power LED starts flashing, then release the button.

Opening/Closing the Roll Paper Cover

Pinch either the left or right cover open lever to open the roll paper cover.

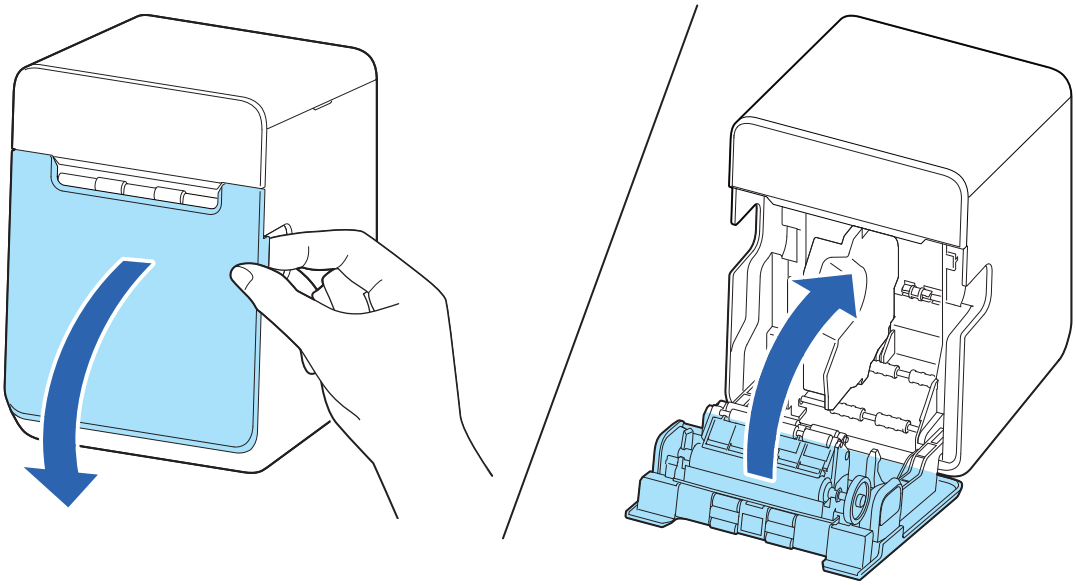

Removing/Attaching the Rear Cover

Pull up the cutout portion of the cover to remove the cover.

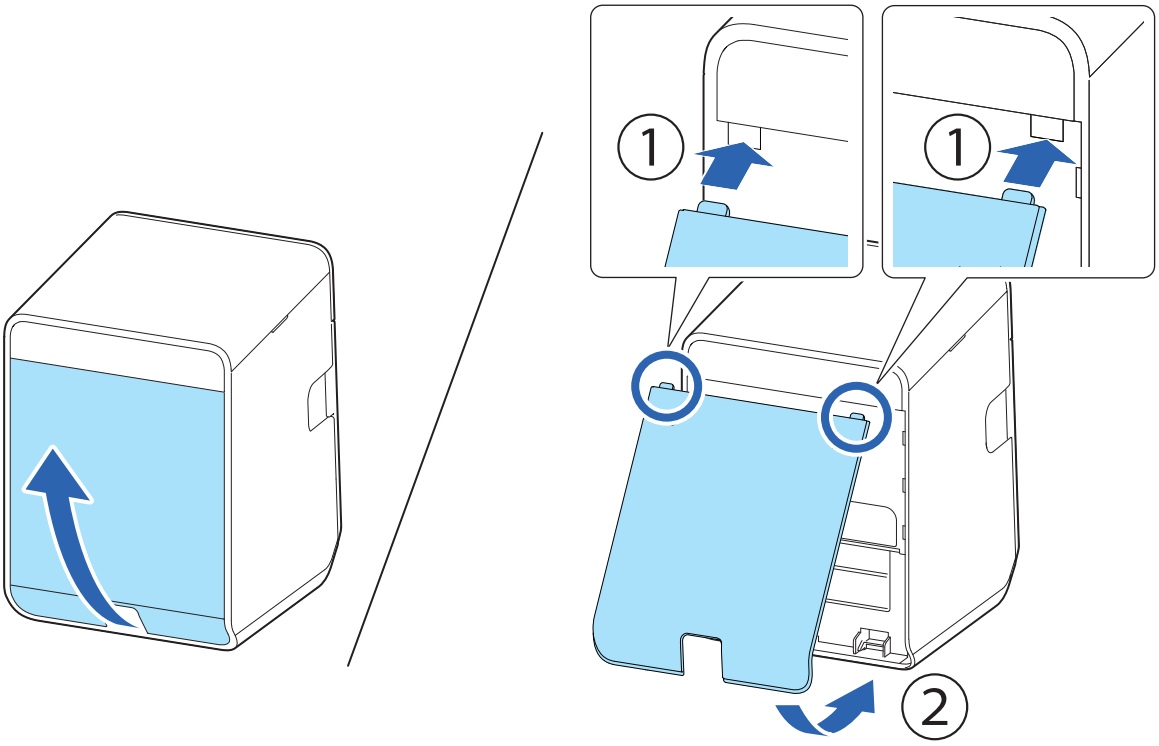

Installing or Replacing the Roll Paper

Follow the steps below to install or replace the roll paper.

CAUTION

- Make sure you use a specified roll paper type.
- Make sure to turn on the printer before loading or replacing roll paper.

For Vertically Placed Printer

1 **Turn on the printer.**

2 **Open the roll paper cover.**

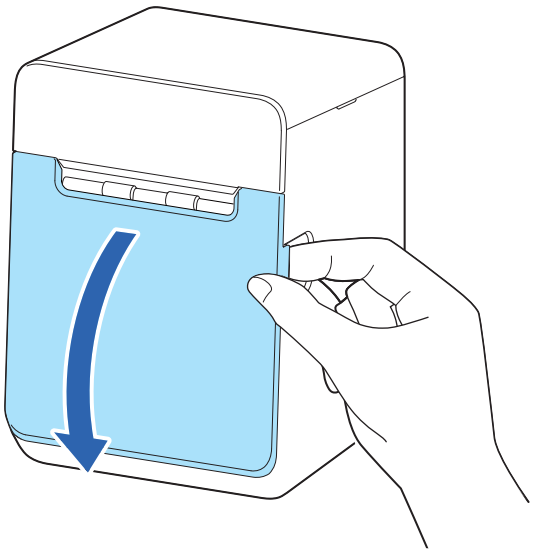

3 **Remove the used roll paper core if any.**

4 Install the roll paper in the correct direction.

Make sure that the roll paper is not slack. If the roll paper is slack, take up the slack before installing it.

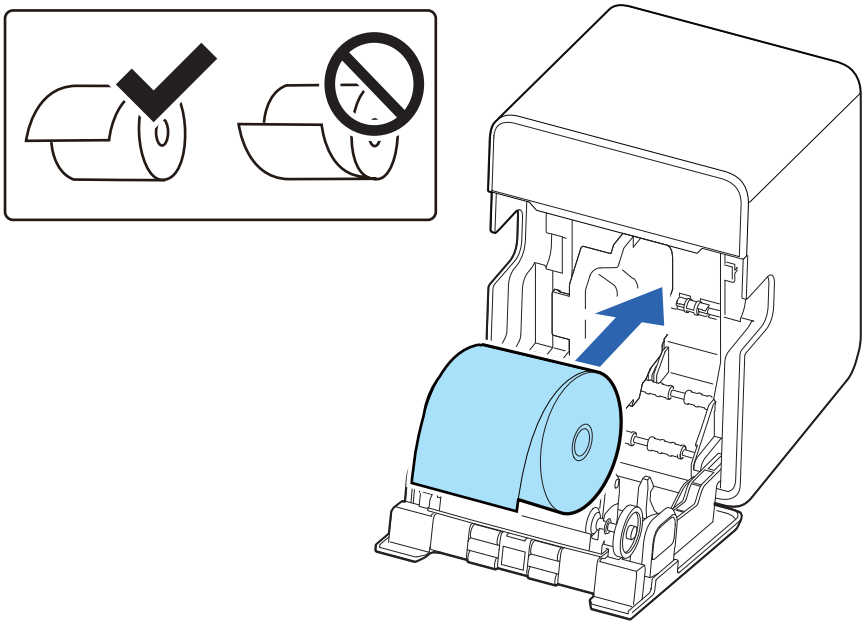

CAUTION

- Before installing the roll paper, make sure that the roll paper is not deformed. Using a deformed roll paper will cause the printer to malfunction.
- Before installing the roll paper, take up any slack in the roll paper by pulling its leading edge. If you install a slack roll paper, a paper jam or print quality problems may occur.

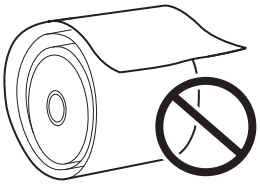

- If the roll paper is replaced while the printer is turned off and a roll paper end occurs, turn the printer on and then replace the roll paper.

5 **Pull out some paper, and close the roll paper cover.**

When the printer power is on, the roll paper is automatically cut.

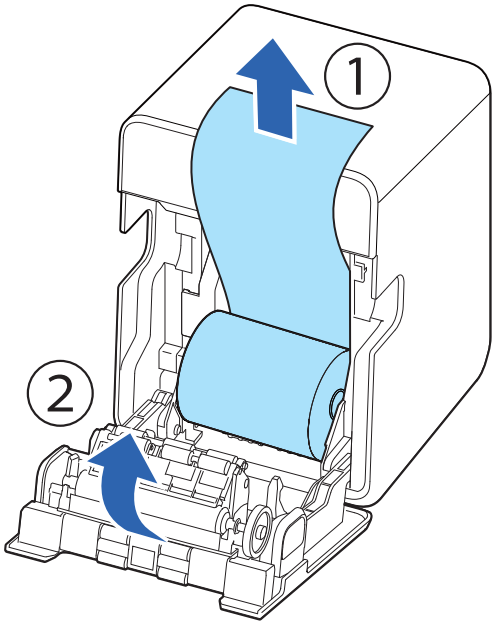

For Horizontally Placed Printer

1 **Turn on the printer.**

2 **Open the roll paper cover.**

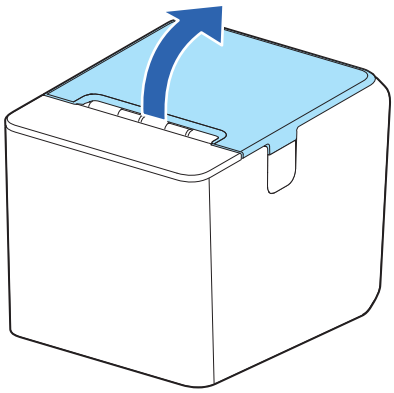

3 **Remove the used roll paper core if any.**

4 Install the roll paper in the correct direction.

Make sure that the roll paper is not slack. If the roll paper is slack, take up the slack before installing it.

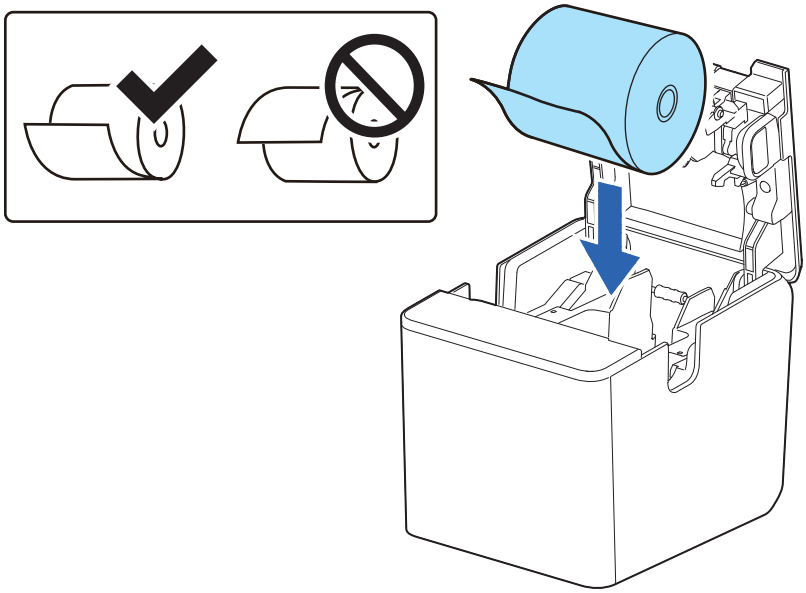

CAUTION

- Before installing the roll paper, make sure that the roll paper is not deformed. Using a deformed roll paper will cause the printer to malfunction.
- Before installing the roll paper, take up any slack in the roll paper by pulling its leading edge. If you install a slack roll paper, a paper jam or print quality problems may occur.

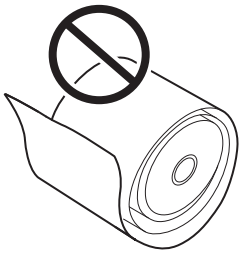

- If the roll paper is replaced while the printer is turned off and a roll paper end occurs, turn the printer on and then replace the roll paper.

5 **Pull out some paper, and close the roll paper cover.**

When the printer power is on, the roll paper is automatically cut.

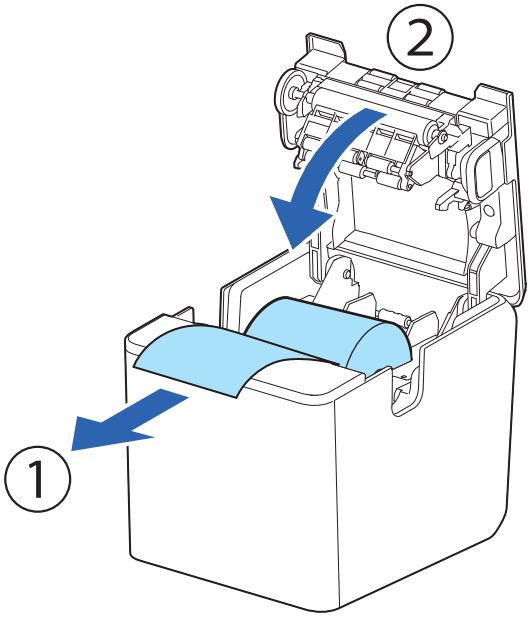

Removing Jammed Paper

When a paper jam occurs, never pull out the paper with too much force. Open the roll paper cover and remove the jammed paper.

CAUTION

Do not touch the thermal head and its surroundings. After printing, the thermal head and its surroundings can be very hot.

CAUTION

When a paper jam occurs, never pull out the paper forcibly.

Follow the steps below if the roll paper is jammed.

1. **Turn off the printer**
2. **Disconnect the AC cable from the power outlet.**
3. **Open the roll paper cover.**
4. **Remove the jammed paper.**

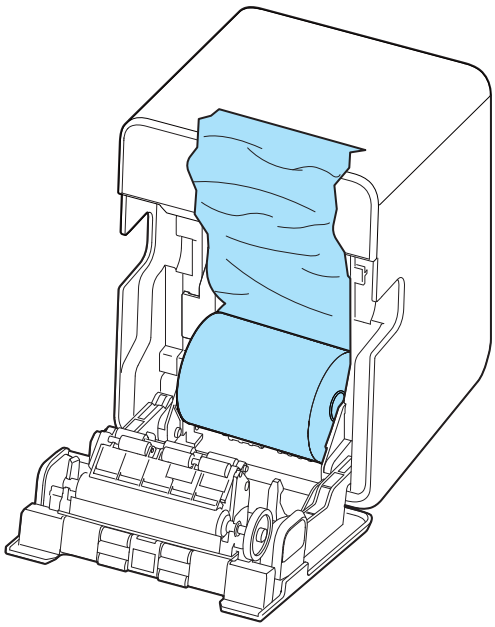

5. **Install a roll paper and then close the roll paper cover.**

When the Roll Paper Cover does Not Open

The roll paper cover will not open until the auto cutter blade returns to its standard position. Turn off the printer and back on. If you still cannot open the roll paper cover, follow the procedure below to return the auto cutter blade to its standard position.

1 **Turn off the printer.**

2 **Disconnect the AC cable from the power outlet.**

3 **Remove the top cover.**

While pressing the cutout portions on both sides of the printer, pull the cover up.

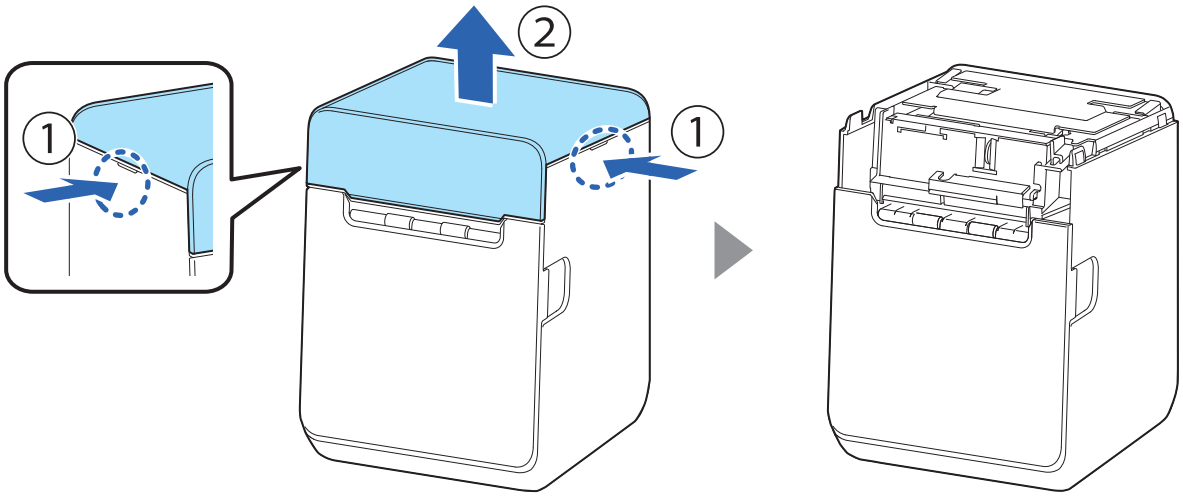

4 **Turn the knob in the direction of the arrow to gradually raise the tip of the part shown in the figure.**

When the tip is raised to the top, the auto cutter blade returns to its standard position.
Check that you can open the roll paper cover.

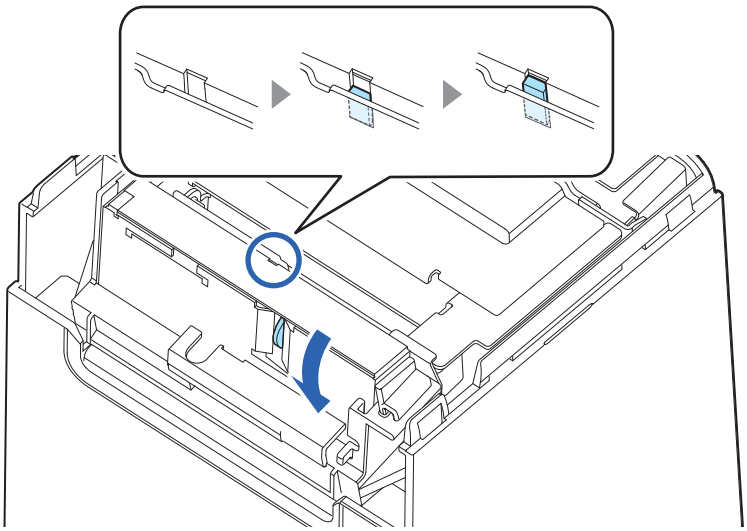

5 **Open the roll paper cover, and remove jammed paper.**

6 **Close the roll paper cover.**

7 **Attach the top cover.**

Cleaning the Printer

Cleaning the Printer Case

If the exterior surface is noticeably dirty, follow the steps below to clean it.

⚠ **CAUTION**	**Never clean the product with alcohol, benzine, thinner, or other such solvents.** Doing so may damage or break the parts made of plastic and rubber.

1. **Turn off the printer.**
2. **Disconnect the AC cable from the power outlet.**
3. **Wipe off the dirt with a dry or slightly damp cloth.**

Cleaning the Inside of the Printer

If paper dust or glue from the roll paper accumulates inside the printer, it may cause poor printing, erratic paper feeding or cutting, or paper jamming. It is recommended to clean the inside of the printer periodically (about once every 6 months) or when it becomes noticeably dirty.

1. **Turn off the printer.**
2. **Disconnect the AC cable from the power outlet.**
3. **Open the roll paper cover.**
4. **Clean the inside of the printer following the instructions on the pages listed below.**
   "Thermal Head" on page 74
   "Paper Exit Area" on page 74
   "Inside the Roll Paper Holder" on page 75
   "Side Surfaces of the Roll Paper Holder" on page 76
   "Platen Roller and Its Surroundings" on page 76
5. **Let the cleaned surface dry completely, then close the roll paper cover.**

Thermal Head

Clean the thermal head with a cotton swab moistened with an alcohol solvent (ethanol or IPA).

CAUTION

- **After printing, the thermal head and its surroundings can be very hot. Be careful not to touch it and to let it cool before you clean it.**
- **Do not damage the thermal head by touching it with your fingers or any hard object.**

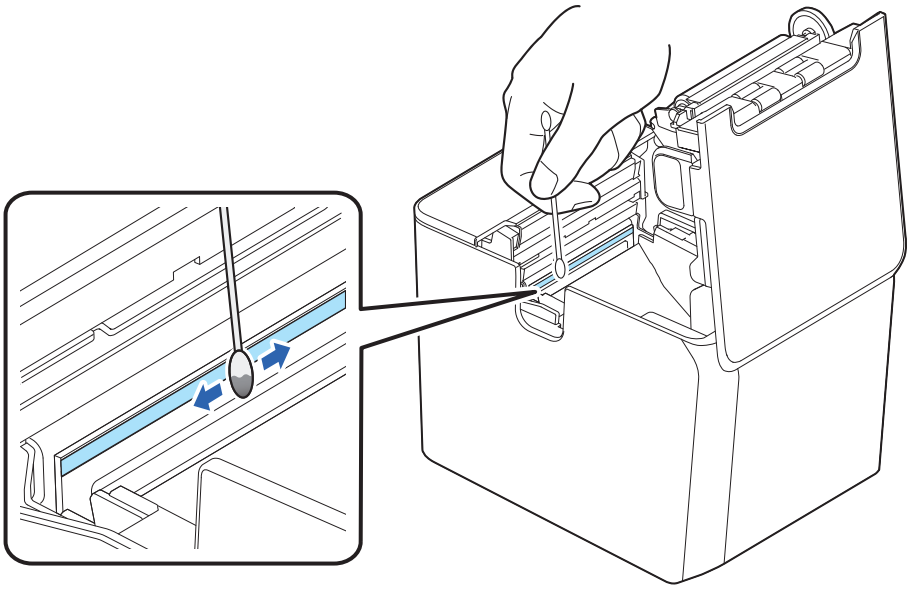

Paper Exit Area

Wipe off paper dust or glue with a slightly damp cloth.

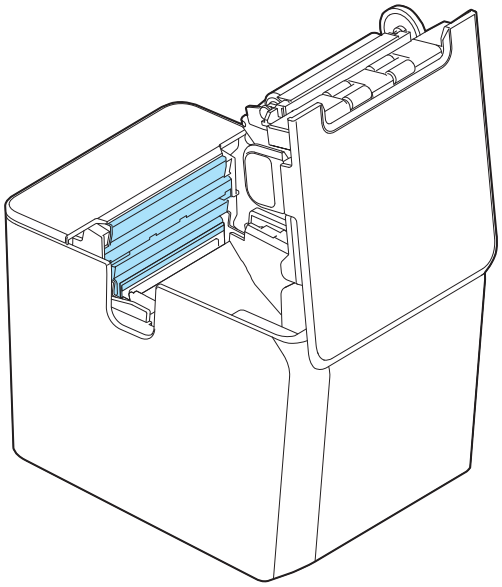

Inside the Roll Paper Holder

Wipe off paper dust with a dry or slightly damp cloth.

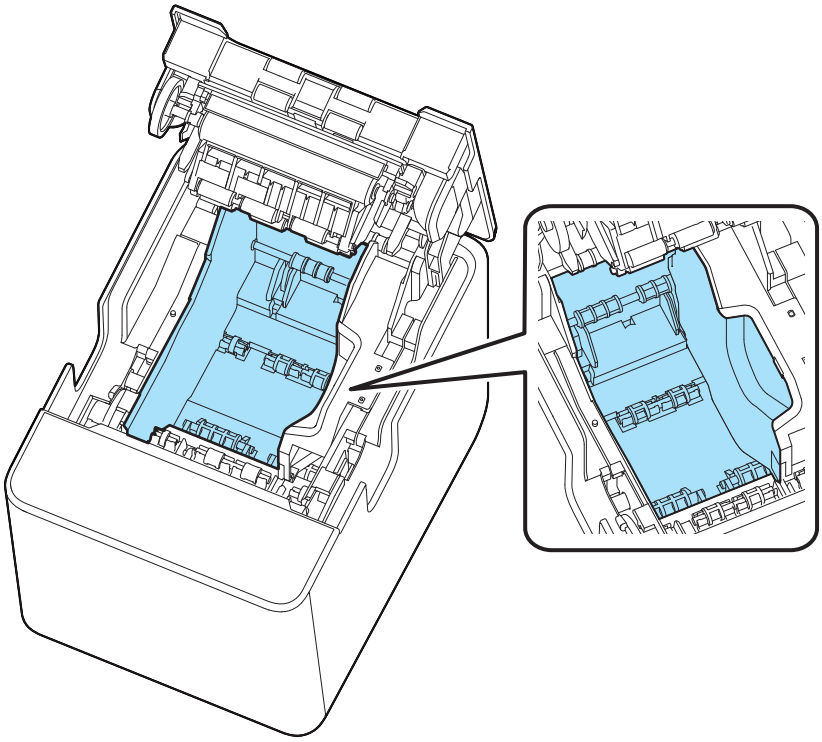

Side Surfaces of the Roll Paper Holder

If there is glue on the side surfaces of the roll paper holder or of the paper guides, wipe it off with a cloth moistened with an alcohol solvent (ethanol or IPA).

CAUTION

Do not use alcohol solvents to clean areas other than those specified. Doing so may damage or break the parts made of plastic and rubber.

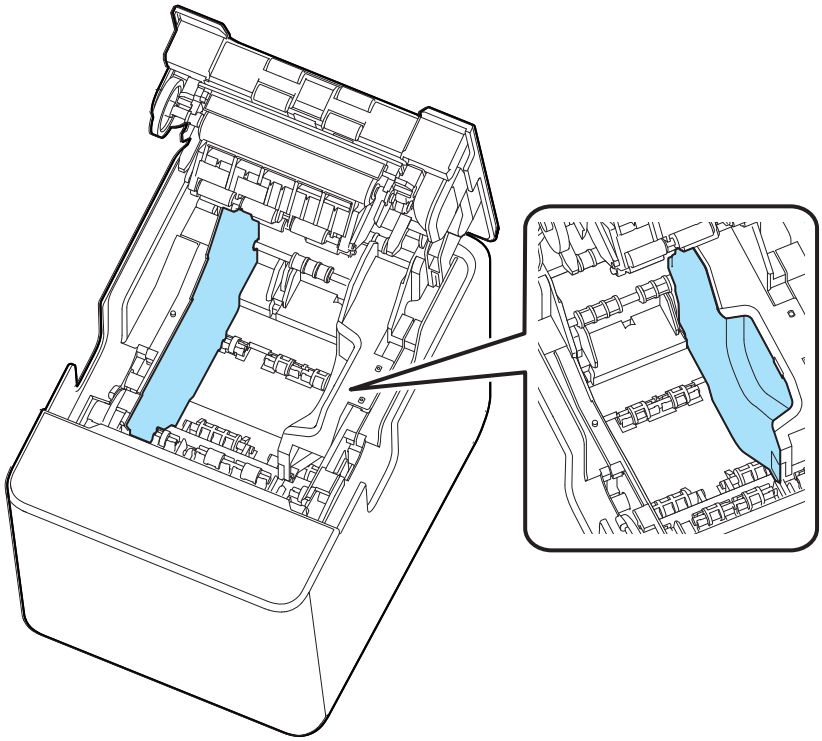

Platen Roller and Its Surroundings

Wipe off paper dust or glue with a slightly damp cloth.

If paper dust or glue has attached to the black mark sensor, blow it off or wipe it off with a slightly damp cloth.

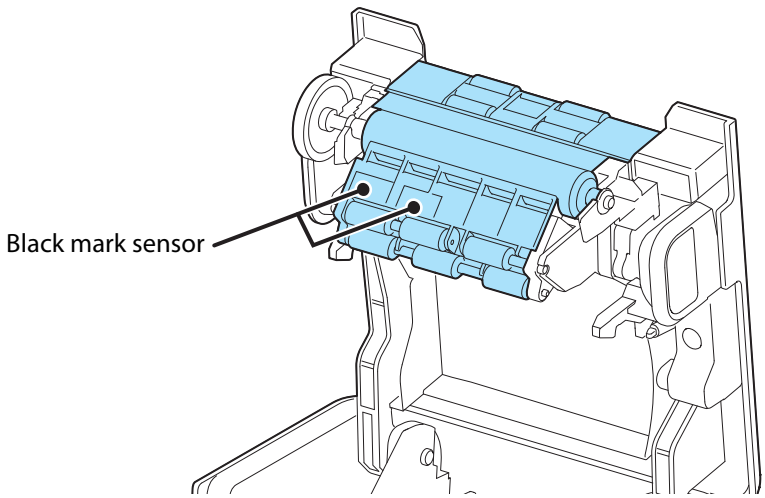

Preparing for Transport

Follow the steps below to transport the printer.

1. **Turn off the printer.**
2. **Confirm that the Power LED is off.**
3. **Disconnect the AC cable from the socket.**
4. **Remove the roll paper.**
5. **Pack the printer upright.**

Advanced Usage

Software Settings

The printer has software setting functions such as memory switches and customized values that allow you to configure various settings for the printer. See the next section for an overview of each feature. You can make/change the settings using TM-L100 Utility, Epson TM Utlity, software setting mode of the printer, or ESC/POS commands.

NOTE

- For details on how to use TM-L100 Utility and TM Utility, please refer to the manual and help of the respective software.
- For details on how to use the software setting mode, see "Software Setting Mode (Customize Value Settings)" on page 96.
- For more information on ESC/POS commands, see "ESC/POS" on page 111.

Settings \ Methods		TM-L100 Utility/ Epson TM Utility	Software Setting Mode	ESC/POS	Menu name in software setting mode
Power ON notification	Memory Switches			✓	
Handshaking (Condition for BUSY)	Memory Switches	✓	✓	✓	BUSY Condition
Data reception error	Memory Switches	✓		✓	
Auto line feed	Memory Switches	✓	✓	✓	Auto Line Feed
Power saving function for USB	Memory Switches	✓	✓	✓	USB power-saving function
Roll paper end/near-end sensors	Memory Switches	✓	✓	✓	Output Paper-end Signals
Error signal output	Memory Switches	✓	✓	✓	Error Control
Network tethering	Memory Switches	✓	✓	✓	Network Tethering
Paper width	Memory Switches	✓	✓	✓	Paper Width with Paper Guide
User NV Memory	Customized Values	✓	✓	✓	User NV Memory
NV Graphics Memory	Customized Values	✓	✓	✓	NV Graphics Memory
Print density	Customized Values	✓	✓	✓	Print Density
Print speed	Customized Values	✓	✓	✓	Print Speed
Thai Character Composition	Customized Values	✓	✓	✓	Thai Character Composition
Code-page	Customized Values	✓	✓	✓	Default Character Code Page
International character set	Customized Values	✓	✓	✓	Default International Character Set
Interface Selection	Customized Values		✓	✓	Interface Selection
Number of columns	Customized Values	✓	✓	✓	Column Emulation
Command execution during offline	Customized Values	✓	✓	✓	Command Execution (Offline)
Amount of top margin by backfeed	Customized Values	✓	✓	✓	Top Margin

Settings \ Methods			TM-L100 Utility/ Epson TM Utility	Software Setting Mode	ESC/POS	Menu name in software setting mode
Paper removal standby		Customized Values	✓	✓	✓	Paper Removal Standby
Time until changing interface		Customized Values	✓	✓	✓	Interface switch waiting time
Select main connection interface		Customized Values	✓	✓	✓	Main connection interface
Paper Reduction	Extra Upper Space Reduction	Customized Values	✓	✓	✓	Automatic Paper Reduction: Upper Margin
Paper Reduction	Extra Lower Space Reduction	Customized Values	✓	✓	✓	Automatic Paper Reduction: Lower Margin
Paper Reduction	Line Space Reduction Rate	Customized Values	✓	✓	✓	Automatic Paper Reduction: Blank Line Spacing
Paper Reduction	Line Feed Reduction Rate	Customized Values	✓	✓	✓	Automatic Paper Reduction: Blank Space
Paper Reduction	Barcode Height Reduction Rate	Customized Values	✓	✓	✓	Automatic Paper Reduction: Barcode Height
Paper Reduction	Reduction ratio of character height	Customized Values	✓	✓	✓	Automatic Paper Reduction: Character Height
Font A Replacement		Customized Values		✓	✓	Font A Replacement
Font B Replacement		Customized Values		✓	✓	Font B Replacement
Buzzer	Select Buzzer	Customized Values	✓	✓	✓	Select Buzzer
Buzzer	When an error occurs: frequency	Customized Values	✓		✓	
Buzzer	When an error occurs: pattern	Customized Values	✓		✓	
Buzzer	When the roll paper ends: frequency	Customized Values	✓		✓	
Buzzer	When the roll paper ends: pattern	Customized Values	✓		✓	
Buzzer	When automatic paper cut activates: frequency	Customized Values	✓		✓	
Buzzer	When automatic paper cut activates: pattern	Customized Values	✓		✓	
Buzzer	When specified pulse 1 (2 pin) occurs: frequency	Customized Values	✓		✓	
Buzzer	When specified pulse 1 (2 pin) occurs: pattern (External buzzer only)	Customized Values	✓		✓	
Buzzer	When specified pulse 2 (5 pin) occurs: frequency	Customized Values	✓		✓	
Buzzer	When specified pulse 2 (5 pin) occurs: pattern (External buzzer only)	Customized Values	✓		✓	
Buzzer	Paper removal standby: frequency	Customized Values	✓		✓	
Buzzer	Paper removal standby: pattern	Customized Values	✓	✓	✓	Buzzer Sound (Removal Standby)

Settings \ Methods		TM-L100 Utility/ Epson TM Utility	Software Setting Mode	ESC/POS	Menu name in software setting mode
Batch rotate print (Upside Down)	**Customized Values**	✓		✓	
Default Character:Multi-Language Font		✓	✓	✓	Default Character: Multi-Language Font
Method for canceling recoverable error		✓		✓	
USB Interface Settings		✓	✓	✓	Class
Bluetooth Interface Settings		✓		✓	
Serial Interface Settings		✓	✓	✓	Serial Interface Baud Rate Serial Interface Parity Serial Interface Handshaking Serial Interface Data Bits
Receipt Enhancement				✓	
Power supply SW setting		✓	✓		Power Supply SW Setting
Pre-feed before next print		✓	✓		Pre-feed before next print
Paper initialization when power ON		✓	✓		Paper initialization when power ON
Periodic time of paper initialization		✓	✓		Periodic time of paper initialization
Black mark control		✓	✓	✓	Black mark control
Setting the conditions that cancel the receive buffer BUSY state		✓	✓		Status to cancel buffer BUSY

Functions

Power ON notification

- Disabled (initial setting)
- Enabled

Handshaking (Condition for BUSY)

- Receive buffer full/Offline (initial setting)
- Receive buffer full

NOTE	In either case above, the printer enters the BUSY state after power is turned on, and when a self-test is being run.

Data reception error

- Prints “?” (initial setting)
- Ignore

Auto line feed

- Always disabled (initial setting)
- Always enabled

Power saving function for USB

- Disabled (initial setting)
- Enabled

NOTE	The USB power-saving function is valid only when the USB interface communication condition is set to the vendor-defined class and the system configuration allows the USB driver to support the USB power-saving function.

Roll paper end/near-end sensors

- Enabled (Roll paper end sensor) (initial setting)
- Disabled

NOTE	This printer is not equipped with the roll paper near-end sensor.

Error signal output

- Enabled (initial setting)
- Disabled

Network tethering

- Disabled (initial setting)
- Enabled

Paper width

- 58 mm/80 mm (initial setting)
- 40 mm/80 mm

NOTE	When changing from 80 mm wide paper to 58 mm wide paper, the paper width is automatically detected and no setting is required.

User NV Memory

1 KB, 64 KB, 128 KB, 192 KB

Initial setting: 1 KB

NV Graphics Memory

None, 64 KB, 128 KB, 192 KB, 256 KB, 320 KB, 384 KB

Initial setting: 384 KB

Print density

Selectable from 70 to 130% (in 5% increments)

Initial setting: 115%

To ensure good print quality, it is recommended to set the print density according to the paper to be used.

("Recommended Print Density for Certified Base Paper" on page 124)

NOTE	• The higher the print density is set, the more likely the print speed will decrease. • The higher the print density is set, the more likely it is that paper dust will adhere to the surface of the print head, resulting in blurred printing.

Print speed

Selectable from levels 1 to 11 (Slow ~ Fast)

Initial setting: level 11

NOTE	Depending on the printing conditions, such as print duty, head temperature, and data transfer speed, the print speed may be adjusted automatically and may cause white streaks on printouts due to intermittent printing (the motor stops occasionally during printing). To prevent this, set the print speed to a lower speed.

Thai Character Composition

- Thai 1 pass (initial settings)
- Thai 3 pass

Code-page

Selectable from 43 pages including user defined page

Initial setting: PC437: USA, Standard Europe

International character set

Selectable from 18 sets

Initial setting: USA

Interface Selection

- Bluetooth only (only for Bluetooth models)
- Serial interface only (only for Serial models)
- Built-in USB only
- Ethernet/Wi-Fi
- USB-A - Device Charging only (only for Device charging models)
- Enable all the interfaces (initial setting)
- Enable all the interfaces except for Bluetooth (only for Bluetooth models)

NOTE

If you want to connect a tablet and the printer via Bluetooth while charging the tablet through the USB connector (USB-A - Device Charging), select “Bluetooth only”. ("Connectors" on page 16)

Number of columns

- Standard mode (initial setting)
- 42 characters mode

Command execution during offline

- Enabled (initial setting)
- Disabled

Amount of top margin by backfeed

4.0 to 14.0 mm (in 0.5 mm increments)

Initial setting: 5.0 mm

CAUTION

- Setting the amount of top margin to 14.0 mm disables the backfeed.
- The recommended amount of top margin is 5.0 to 12.0 mm. When setting outside the recommended range, check to see if any problems occur in the operating environment. Paper jams may occur in hot and humid environments.
- When the paper is fed backward, the paper may get wrinkled or smeared due to a slack in the roll. It is recommended to use thermal paper that has high resistance to abrasion.
- Make sure to feed the paper by at least 35 mm before moving the auto cutter. It the paper feed length is not enough, it may cause a paper jam or make it difficult to remove the paper.

NOTE

When using the TM-L100 Utility and TM Utility, you can specify values in 0.5 mm increments.

Paper removal standby

- Enabled (initial setting)
- Disabled

NOTE

Refer to "Precautions when Developing Applications" on page 117 for precautions on using the "Paper Removal Standby".

Time until changing interface

Selectable from 1 to 10 seconds (in 1 second increments)

Initial setting: 1 second

Select main connection interface

- Auto (interface that receives data first) (initial setting)
- Serial interface (only for Serial models)
- USB
- Bluetooth (only for Bluetooth models)
- Ethernet or Wi-Fi
- USB-A - Device Charging (only for Device charging models/Bluetooth models)
- No main connection I/F

CAUTION

- When using the printer with multiple interfaces, set the interface that is always connected and used as the main connection.
- You cannot use wired LAN and wireless LAN at the same time.
- When you do not use the Bluetooth function, set the Bluetooth security level to "Middle" or "High" to prevent unauthorized access to the printer over Bluetooth.
  You can change the security level by using Epson TM Utility, TM-L100 Utility, or in the Interface Setup mode.

NOTE

- The displayed items vary depending on the interface configuration.
- For information about the function, see "" on page 26.

Paper Reduction

Extra Upper Space Reduction

- Disabled (initial setting)
- Enabled

Extra Lower Space Reduction

- Disabled (initial setting)
- Enabled

Line Space Reduction Rate

- Disabled (initial setting)
- 25%
- 50%
- 75%
- Reduce to minimum width

Line Feed Reduction Rate

- Disabled (initial setting)
- 25%
- 50%
- 75%

Barcode Height Reduction Rate

- Disabled (initial setting)
- 25%
- 50%
- 75%

Reduction ratio of character height

- Disabled (initial setting)
- 25% reduction of inner spacing
- 50% reduction of inner spacing
- 75% reduction of inner spacing
- 75% reduction of inner spacing and shrinking the character height
- 0 dots for inner spacing and shrinking the character height

NOTE

- No reduction is applied to blank dot lines that exist in a graphic data.
- Reduced barcodes are not guaranteed to be correctly scanned. Make sure to check whether they are properly read by a barcode reader that is actually used.

Font A Replacement

- Does not replace (initial setting)
- Font B
- Special Font A
- Special Font B

Font B Replacement

- Does not replace (initial setting)
- Font A
- Special Font A
- Special Font B

Buzzer

NOTE

- For information about how to connect the optional external buzzer, see "Connecting the Optional External Buzzer" on page 42.
- When using a cash drawer, make sure to set “Select Buzzer” to “Disabled” or “Built-in buzzer”.
- When using the built-in buzzer and cash drawer, set each to pin 2 (pulse 1) or pin 5 (pulse 2) of the drawer kick connector.

Select Buzzer

- Built-in buzzer (initial setting)
- External buzzer
- Disabled

When an error occurs: frequency

- Continues to sound (initial setting)
- Does not sound
- 1 time

When an error occurs: pattern

- External buzzer: error sound pattern, Built-in buzzer: Pattern B (initial setting)
- Patterns A to E

When the roll paper ends: frequency

- Continues to sound (initial setting)
- Does not sound
- 1 time

When the roll paper ends: pattern

- External buzzer: paper end sound pattern, Built-in buzzer: Pattern C (initial setting)
- Patterns A to E

When automatic paper cut activates: frequency

- 1 time (initial setting)
- Does not sound

When automatic paper cut activates: pattern

Selectable from Patterns A to E

Initial setting: Pattern A

When specified pulse 1 (2 pin) occurs: frequency

- 1 time (initial setting)
- Does not sound

When specified pulse 1 (2 pin) occurs: pattern (External buzzer only)

Selectable from Patterns A to E

Initial setting: Pattern A

When specified pulse 2 (5 pin) occurs: frequency

- 1 time (initial setting)
- Does not sound

When specified pulse 2 (5 pin) occurs: pattern (External buzzer only)

Selectable from Patterns A to E

Initial setting: Pattern B

Paper removal standby: frequency

- Continues to sound (initial setting)
- Does not sound
- 1 time

Paper removal standby: pattern

Selectable from Patterns A to E

Initial setting: Pattern A

Batch rotate print (Upside Down)

- Disabled (initial setting)
- Enabled

Default Character:Multi-Language Font

- South Asian languages
- Simplified Chinese

Method for canceling recoverable error (Cutter error)

- Command, and close of the roll paper cover (initial setting)
- Command only

USB Interface Settings

Class

- Printer class (initial setting)
- Vendor-defined class

NOTE

The "Class" setting is applied only to the Type-B USB connector.

Bluetooth Interface Settings (Bluetooth model only)

- Device name (initial setting: TM-L100_xxxxxx) "xxxxxx" is the last 6 digits of the printer serial number
- Passkey (initial setting: 0000)
- Security (initial setting: Middle)
- Auto Re-Connect with iOS device (initial setting: Enabled)

Serial Interface Settings (Serial model only)

Baud rate

- 115200 bps (initial setting)
- 2400 bps
- 4800 bps
- 9600 bps
- 19200 bps
- 38400 bps
- 57600 bps

Parity

- None (initial setting)
- Odd parity
- Even parity

Handshake

- DTR/DSR control (initial setting)
- XON/XOFF control

Bit length

- 8-bit wide (initial setting)
- 7-bit wide

Receipt Enhancement

Functions	Available settings	Initial setting
Automatic top logo printing	Key code	Undefined
	Justification (Left justified, Centered, Right justified)	Undefined
	Number of deleted lines after top logo printing	Undefined
Automatic bottom logo printing	Key code	Undefined
	Justification (Left justified, Centered, Right justified)	Undefined
Advanced settings for automatic top/bottom logo printing	Print top logo when paper is fed to the cut position (Enabled/Disabled)	Enabled
	Print top logo at power-on (Enabled/Disabled)	Disabled
	Print top logo when the roll paper cover is closed (Enabled/Disabled)	Enabled
	Print top logo when the buffer is cleared during a recoverable error.(Enabled/Disabled)	Enabled
	Print top logo when advancing paper using the Feed button is finished (Enabled/Disabled)	Disabled

Power supply SW setting

- Enabled (initial setting)
- Disabled

NOTE

Refer to "Precautions when Developing Applications" on page 117 for precautions on using the "Power supply SW setting".

Pre-feed before next print

Selectable from 0 dot (disabled), 1 dot, 2 dot, 3 dot, 4 dot, 5 dot, and 6 dot.

Initial setting: 2dot

Paper initialization when power ON

- Enabled (initial setting)
- Disabled

Periodic time of paper initialization

Selectable from "Disabled" and 1 to 720 minutes

Initial setting: 720 minutes

Black mark control

- Disabled (initial setting)
- Enabled

Setting the conditions that cancel the receive buffer BUSY state

- Cancels the BUSY state when the remaining capacity of the receive buffer reaches 256 bytes (initial setting)
- Cancels the BUSY state when the remaining capacity of the receive buffer reaches 138 bytes

Setting/Check Modes

As well as print mode, the following modes are also provided for making various printer settings and checking items.

- Self-test mode
- NV graphics information print mode
- Receipt Enhancement information print mode
- Software settings mode
- Restore default values mode
- Interface setup mode
- Hexadecimal dumping mode

The self-test mode or hexadecimal dumping mode is selected depending on the operation performed when the power is turned on.

NV graphic information print mode, Receipt Enhancement information print mode, Software settings mode, and Restore default settings mode are selected depending on the Feed button operation performed during a self-test.

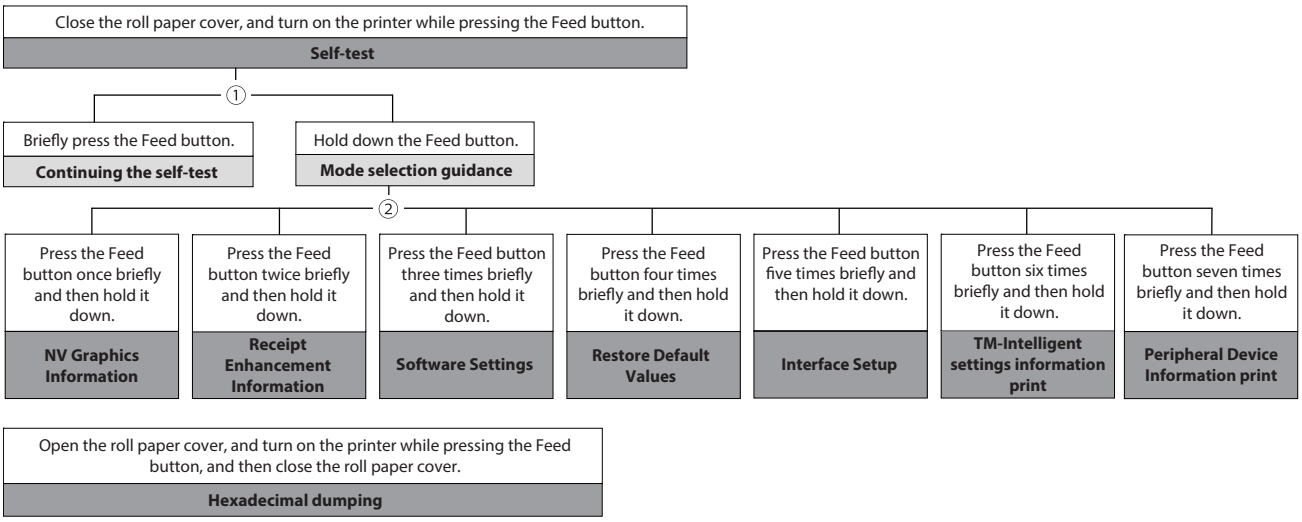

In 1 and 2, the following guidances are printed, the Paper LED flashes, and instructs the user's operations.

1. Continuing self-test guidance

```
Select Modes by pressing Feed Button.
  Continue SELF-TEST: Less than 1 second
  Mode Selection    : 1 second or more
```

2. Mode selection guidance

```
                Mode Selection

Modes
  0: Exit and Reboot Printer
  1: NV Graphics Information
  2: Receipt Enhancement Information
  3: Customize Value Settings
  4: Restore Default Values
  5: Interface Setup
  6: TM-Intelligent Information
  7: Peripheral Device Information
  8 or more: None

Select Modes by executing following
procedure.
   step 1. Press the Feed button less
           than 1 second as many times
           as the selected mode number.
   step 2. Press Feed button for 1
           second or more.
```

Self-test Mode

You can check the following items using the self-test.

- Product name
- Firmware version
- Product serial number
- Interface type
- Peripheral device information
- Resident fonts
- Maintenance counter information (head running length, number of times of autocutting)

Follow the steps below. You can also run the self-test using the ESC/POS commands.

1 **Close the roll paper cover.**

2 **While pressing the Feed button, turn on the printer. (Hold down the Feed button until printing starts.)**

After printing the current print status, a Continuing self-test guidance is printed, and the Paper LED flashes.

3 **Briefly press the Feed button (less than one second) to continue the self-test.**

The printer prints a rolling pattern on the roll paper, using the built-in character set.
After "*** completed ***" is printed, the printer initializes and switches to standard mode.

NV Graphics Information Print Mode (NV Graphics Information)

Prints the following NV graphic information registered to the printers.

- Capacity of the NV graphics
- Used capacity of the NV graphics
- Unused capacity of the NV graphics
- Number of NV graphics that are registered
- Key code, number of dots in X direction, number of dots in Y direction to be defined.
- NV graphics data

NOTE

For details on NV graphics, see "NV Graphics Memory" on page 24.

Follow the steps below.

1. **After running a self test, hold down the Feed button for at least one second, and then select the Mode selection.**
   The Mode selection guidance is printed, and the Paper LED flashes.

2. **After briefly (less than one second) pressing the Feed button once, hold it down for at least one second, to print the NV graphics information.**
   After information printing, the Mode selection guidance is printed again.

3. **To finish, turn off the power, or select “Exit and Reboot Printer”.**

Receipt Enhancement Information Print Mode (Receipt Enhancement Information)

You can check the following items using the R/E information mode:

- Automatic top logo setting
- Automatic bottom logo setting
- Extended settings for automatic top/bottom logo

Follow the steps below.

1. **After running a self test, hold down the Feed button for at least one second, and then select the Mode selection.**
   The Mode selection guidance is printed, and the Paper LED flashes.

2. **After briefly (less than one second) pressing the Feed button twice, hold it down for at least one second, to print the R/E information.**
   After information printing, the Mode selection guidance is printed again.

3. **To finish, turn off the power, or select “Exit and Reboot Printer”.**

Software Setting Mode (Customize Value Settings)

Set the printer's memory switches and customized values.

For available settings and explanation of each setting, see "Software Settings" on page 78.

> **NOTE**
> You can also make the software settings using the ESC/POS commands.

Follow the steps below.

1 After running a self test, hold down the Feed button for at least one second to enter the Mode selection.

The Mode selection guidance is printed, and the Paper LED flashes.

2 Briefly press the Feed button three times (less than one second) , and then hold it down for at least one second to enter the Software settings mode (Customized value setting).

The Software setting mode guidance is printed, and the Paper LED flashes.

```
Customize Value Settings


Modes
   0: Exit
   1: Print Current Settings
   2: Print Density
   3: Print Speed
   4: Automatic Paper Reduction
   5: Auto Paper Feed&Cut at cover close
   6: Paper Width
   7: Character/Font Settings
   8: Interface Selection
   9: Interface Settings
   10: Command Execution (Offline)
   11: Other Settings

Select Modes by executing following
procedure.
   step 1. Press the Feed button less
           than 1 second as many times
           as the selected mode number.
   step 2. Press Feed button for 1
           second or more.
```

3 **After briefly pressing the Feed button (less than one second) for the number of times shown in the print result, hold down the button for more than one second to select the setting items.**

The setting selected as the setting item, the current settings and initial settings are printed.
Depending on the setting item, you may need to continue selecting the setting item before the settings are printed.
For details on setting items, see "Software Settings" on page 78.

4 **Select a setting by briefly pressing the Feed button (less than one second) for the number of times applicable to the setting, and then hold down the button for more than one second to confirm your selection.**

After saving the settings, the Software setting mode guidance is printed, and the Paper LED flashes.

5 **To close Software setting mode, turn off the printer, or select "Exit" to return to Mode selection guidance, and then select "Exit and Reboot Printer".**

NOTE

- To select 0 as the item number, hold down the Feed button until printing starts.
- If the button is pressed a number of times that is not displayed by the Setup guidance, the operation is invalid and the same guidance is printed.

Restore Default Values Mode (Restore Default Values)

In Restore default values mode, following values saved on NV Memory will be set back to initial settings. When any error occurs, you can use to specify the reason.

Setting Item	Restore Default	Restore Default & Delete Data
Customized value	✓	✓
Memory switch	✓	✓
R/E (Receipt Enhancement) settings	✓	✓
USB interface settings	✓	✓
Network interface settings	✓	✓
TM-Intelligent function settings	✓	✓
NV graphics	-	✓
NV bit image	-	✓
User defined page	-	✓
User NV memory	-	✓

Follow the steps below.

1 **After running a self test, hold down the Feed button for at least one second to enter the Mode selection.**

The Mode selection guidance is printed, and the Paper LED flashes.

2 **Briefly press the Feed button four times (less than one second), and then hold it down for at least one second to enter the Restore Default Values.**

The guidance is printed.

3 **When only restoring the default settings:**

Briefly press the Feed button once (less than one second), hold it down for at least one second. (Hold down the Feed button until the message of restore completion is printed.)

When restoring default settings and deleting user defined data:

Briefly press the Feed button twice (less than one second), and then hold it down for at least one second. (Hold down the Feed button until the restoration complete message is printed.)

4 **To finish, turn off the power.**

Interface Setup Mode (Interface Setup)

Use this mode to setup the interface and other settings.

Follow the steps below.

1. **After running a self test, hold down the Feed button for at least one second to enter the Mode selection.**
   The Mode selection guidance is printed, and the Paper LED flashes.

2. **Briefly press the Feed button five times (less than one second), and then hold it down for at least one second to enter the Interface Setup mode.**
   The guidance is printed.

3. **After briefly pressing the Feed button (less than one second) for the number of times shown in the print result, hold down the button for more than one second to select the setting items.**

Initialize

Select [Wi-Fi & Ethernet Setup] or [Bluetooth Setup] and select [Initialize] to restore the communication settings to the factory default. The printer is reset and restarted.

SimpleAP mode (When using the OT-WL06)

When using the Wireless LAN unit, select [Wi-Fi & Ethernet Setup] and select [SimpleAP] to start in SimpleAP mode (the same as the factory default setting). The printer is reset and restarted, and it begins printing the "SimpleAP Start" information.

Select this to quickly set up a network connection.

NOTE

For information on the Quick connection function, see "Useful Functions for Smart Devices (Device Charging model/Bluetooth model)" on page 26.

Auto re-connect to iOS device (Bluetooth model)

In Bluetooth model, select [Bluetooth Setup] and then select [Auto Re-Connect iOS], you can select whether to enable or disable auto reconnection to iOS devices.

NOTE

- For details on the auto re-connect function, see "Auto Reconnect Feature" on page 143.
- You can change the settings with TM-L100 Utility and TM Utility.

Bluetooth Security Settings (Bluetooth model)

For Bluetooth models, select [Bluetooth Setup], and then select [Security], and you can change the Bluetooth security settings.

CAUTION

When the security settings are changed from "Middle" or "Low" to "High", or vice versa, the link key (pairing information) is deleted. If the printer is already paired with a terminal, unpair them and then pair again.

NOTE

You can change the settings with TM-L100 Utility and TM Utility.

Security	Pairing Mode	Pairing Method
Low (initial setting)	Pairing is always possible	Just Works
Middle	Pairing is possible for one minute after turning the printer on or after printing the status sheet	Just Works
High	Pairing is possible for one minute after printing the status sheet	Numeric Comparison/Passkey Entry

Pairing method when the security is set to Middle/High (from the printer)

When the security is set to Middle/High and the printer is ready to be paired, perform the following procedure.

1 **Load paper in the printer, and then turn it on.**

CAUTION

- Make sure no errors have occurred and that the printer is not off-line.
- You cannot pair the printer while the network is starting up immediately after the power is turned on.

2 **Open the roll paper cover, hold down the FEED button (two seconds), and then close the roll paper cover.**

3 **A status sheet is printed, and the Bluetooth LED flashes a pattern indicating that pairing is now possible.**

NOTE

- Pairing is possible for one minute after printing the status sheet.
- You can enable pairing also by printing the status sheet by pressing the status sheet button.

Pairing method when the security is set to High (from the host)

When the security is set to High and the printer is ready to be paired, perform the following procedure.

1. **Search for the printer on the Bluetooth settings screen on the host device.**

2. **Select the printer you want to pair with.**
   The printer prints the Passkey.

3. **Check that the printed Passkey and the Passkey displayed on the host device match, and then select "Pairing" on the host device.**

TM-Intelligent Settings Information Print Mode (TM-Intelligent Information)

This function allows you to print TM-Intelligent setting information currently registered in the printer.

Follow the steps below.

1. **After running a self-test, hold down the Feed button for at least one second to enter the Mode selection.**
   The Mode selection guidance is printed, and the Paper LED flashes.

2. **Briefly press the Feed button six times (less than one second), and then hold it down for at least one second to print the TM-Intelligent setting information.**
   After information printing, the Mode selection guidance is printed again.

3. **To finish, turn off the power, or select “Exit and Reboot Printer”.**

Peripheral Device Information Print Mode (Peripheral Device Information)

This function allows you to print information for the device currently connected to the printer.

- Customer display information
- Wi-Fi adapter information
- Handheld scanner information

Follow the steps below.

1. **After running a self-test, hold down the Feed button for at least one second to enter the Mode selection.**
   The Mode selection guidance is printed, and the Paper LED flashes.

2. **Briefly press the Feed button seven times (less than one second), and then hold it down for at least one second to print the Peripheral Device Information.**
   After information printing, the Mode selection guidance is printed again.

3. **To finish, turn off the power, or select “Exit and Reboot Printer”.**

Hexadecimal Dumping Mode

In hexadecimal dumping mode, data from the host device is printed in hexadecimal numbers and characters. By comparing the print outs and the program, you can check whether or not data is being sent to the printer correctly.

NOTE

- When there are no characters that correspond to the print data, " . " is printed.
- If you press the Feed button when there is less than one line of print data, one line is printed.
- During hexadecimal dumping mode, applications that check the printer status may not operate correctly. The printer only returns the status for the "Real-time transmission status" command.

Follow the steps below. Entering the hexadecimal dumping mode is also possible using the ESC/POS commands.

1 **Open the roll paper cover.**

2 **While pressing the Feed button, turn on the printer. (Hold down the Feed button until the Error LED turns on.)**

3 **Close the roll paper cover.**

From this point, all data received by the printer is printed in the corresponding hexadecimal numbers and ASCII characters.

Example of printing in hexadecimal dumping mode:

```
Hexadecimal Dump
To terminate hexadecimal dump,
press FEED button three times.




1B 21 00 1B 26 02 40 40 1B 69 . ! . . & . @ @ . i
1B 25 01 1B 63 34 00 1B 30 31 . % . . c 4 . . 0 1
41 42 43 44 45 46 47 48 49 4A A B C D E F G H I J

          ***  completed  ***
```

4 **To close hexadecimal dumping mode, turn off the printer after printing is complete, or press the Feed button for three times.**

Printing a Status Sheet

Follow the steps below to check the interface settings.

NOTE

You cannot print after turning on the power while the Power LED is flashing.

Using the Feed button

1 **Check that the printer is on.**

2 **Open the roll paper cover.**

3 **Hold down the Feed button for at least one second.**

4 **Close the roll paper cover.**
The status sheet is printed. After printing, the printer returns to the standard mode.

Using the Status Sheet Button

If you have removed the rear cover of the printer, you can use the status sheet button.

1 **Check that the printer is turned on.**
Make sure the roll paper cover is closed.

2 **Hold down the status sheet button for at least three seconds.**
The status sheet is printed. After printing, the printer returns to the standard mode.

CAUTION

- After the status sheet is printed, only the print settings of the mainly connected interface are retained. For the mainly connected interface, see "Printing Using Multiple Interfaces" on page 62.
- Ethernet and Wi-Fi status sheets are not printed while the printing communication protocol is being established. They will be printed after the connection is cut off (including being cut due to a time out).
- The Bluetooth status sheet is not printed if status sheet printing is performed under the following conditions.
  * Bluetooth is connected when the Bluetooth security is set to "Medium" or "High"
  * An error occurs when the Bluetooth security is set to "Medium" or "High"
  * Time between when a pairing request is received and Passkey printing starts when the Bluetooth security is set to "High"
- "(none)" is printed for the "Connected Peripheral" if no peripherals are connected to the USB downstream port connector.

*** Bluetooth Interface ***

Bluetooth Status
BD_ADDR : XX:XX:XX:XX:XX:XX
Passkey : XXXX
Device Name: TM-L100_XXXXXX
Module Ver : X.XX
Module Info : BT401-XXXXX
Mode : Auto re-connect enable
Security : Low

Bluetooth Status
BT : XXXXXXXXXXXX
DN : TM-L100

*** Wi-Fi & Ethernet Interface ***

Wi-Fi Status
MAC Address : Unmounted
SSID : EPSON_Printer
Network Mode : Infrastructure
Comm Standard : 802.11b/g/n
Encryption Type : WPA2-PSK
Link Status : Unknown
Channel : Unknown
Transmission : Unknown
Access Point : Unknown
Signal Level : Unknown

Ethernet Status
MAC Address : XX-XX-XX-XX-XX-XX
MAC Address2 : XX-XX-XX-XX-XX-XX
Physical Layer : Auto-negotiation
Link Status : Disconnect

Ethernet
WF : XXXXXXXXXXXX
DN : TM-L100

Network
Soft Version : 01.00(1930.20.00)

TCP/IP Status
Acquiring : Auto
IP Address : (NONE)
Subnet Mask : (NONE)
Default Gateway : (NONE)

Service Status
Time Server : (off)
Server Direct Print : (off)
Status Notification : (off)

Other Status
Date/Time : 2020/01/01 00:00:00
Wi-Fi Device ID : Unknown
Wi-Fi Region ID : 1

*** Wi-Fi & Ethernet Interface ***

Wi-Fi Status
MAC Address : Unmounted
SSID : EPSON_Printer
Network Mode : Infrastructure
Comm Standard : 802.11b/g/n
Encryption Type : WPA2-PSK
Link Status : Unknown
Channel : Unknown
Transmission : Unknown
Access Point : Unknown
Signal Level : Unknown

Ethernet Status
MAC Address : XX-XX-XX-XX-XX-XX
MAC Address2 : XX-XX-XX-XX-XX-XX
Physical Layer : Auto-negotiation
Link Status : Disconnect

Ethernet
WF : XXXXXXXXXXXX
DN : TM-L100

Network
Soft Version : 01.00(1930.20.00)

TCP/IP Status
Acquiring : Auto
IP Address : (NONE)
Subnet Mask : (NONE)
Default Gateway : (NONE)

Service Status
Time Server : (off)
Server Direct Print : (off)
Status Notification : (off)

Other Status
Date/Time : 2020/01/01 00:00:00
Wi-Fi Device ID : Unknown
Wi-Fi Region ID : 1

Resetting the Interface Settings

Follow the steps below to restore the network settings to the factory default.

Resetting using the Interface Setup Mode

For information about the Interface Setup mode, see the link below.

"Interface Setup Mode (Interface Setup)" on page 99

Resetting using the Status Sheet Button

If you have removed the rear cover of the printer, you can use the status sheet button.

1. **Turn off the printer and close the roll paper cover.**

2. **Hold down the status sheet button while turning on the printer.**
   A message is printed indicating that resetting is being performed, and the printer restarts.

TM-Intelligent Function

This product supports the TM-Intelligent function and provides the following functions.

- Server direct print
- Status Notification

Server direct print

The server direct function allows this product to acquire print data from a Web server and then print.
By including print data in a response to request from this product, the Web server application can print to this product or a TM printer on the network.

The features are as follows.

- You can acquire print data from three different URLs.
- Print data is available in ePOS-Print XML format.
- You can use this product to print to TM printers on a network.

Regarding details on server direct printing, see the Server Direct Printing User's Manual. Careful consideration should be given when enabling the [Paper removal standby] setting in your system that use the server direct printing function.

Status Notification

Status Notification is used to periodically notify the TM printers with SDP support status to the Web server. The Web server automatically responds with an empty response.
Operating the printer management application created by the user with the Web server enables grasp of the status of the printers installed in a shop from a remote place.
For more details about the Status Notification, refer to the "Server Direct Print User's Manual".

Network Tethering (iOS device only) (For Device charging model/Bluetooth model)

A tablet POS system is a POS system that uses a tablet computer in which the POS application is installed. If the tablet communicates via Wi-Fi, the communication may become unstable depending on the radio wave condition in the shop or store and it may cause the POS system to malfunction.
The network tethering provides network function to an iOS device that is connected to the printer using a Lightning to USB cable. This enables stable and reliable operation of the POS system. In addition, the iOS device can be charged at the same time.
Enable the network tethering of the printer to use the function.

CAUTION

- If the network tethering is enabled and an iOS device is connected to the USB-A Device Charging connector (white connector) on the printer that is connected to a wired network, the iOS device can communicate over the wired network using the tethering function instead of Wi-Fi communication.
- The speed of the wired network communication using the network tethering is about 1.5 Mbps. Depending on the environment, the speed may slower than Wi-Fi communication.

❏ For Wi-Fi Communication (Not using the Network tethering)

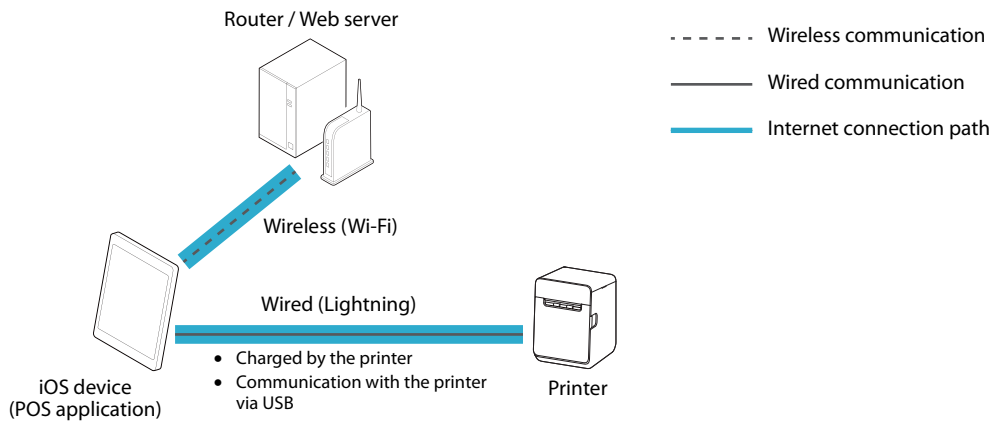

❏ For Wired LAN Communication (Using the Network tethering)

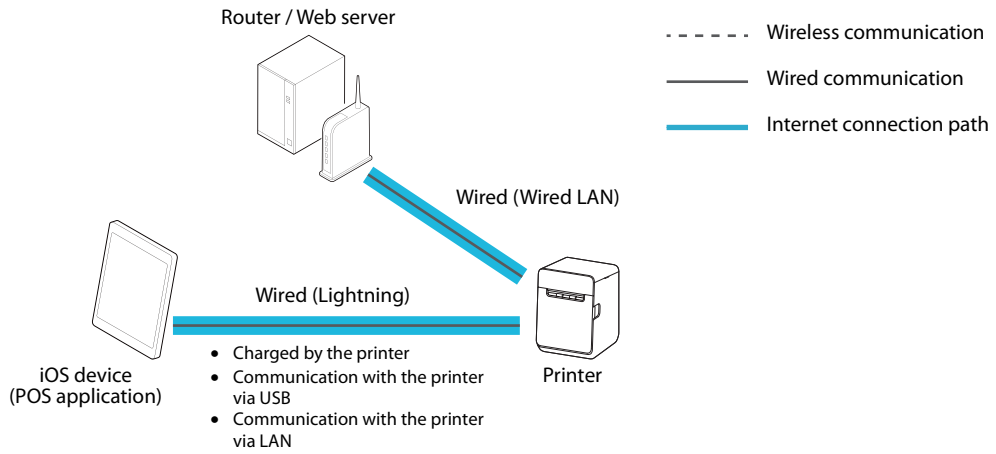

Tablet Devices Supported by the Network Tethering

Operation of this function has been checked with iOS devices running iOS 10.1 or later.

Enabling the Tethering Function

Enable the tethering function of the printer using Epson TM Utility, TM-L100 Utility, or in the software settings mode.

Enabling by Using Epson TM Utility

Select [Change Printer Settings] - [Network tethering] in that order to enable (or disable) the tethering function.

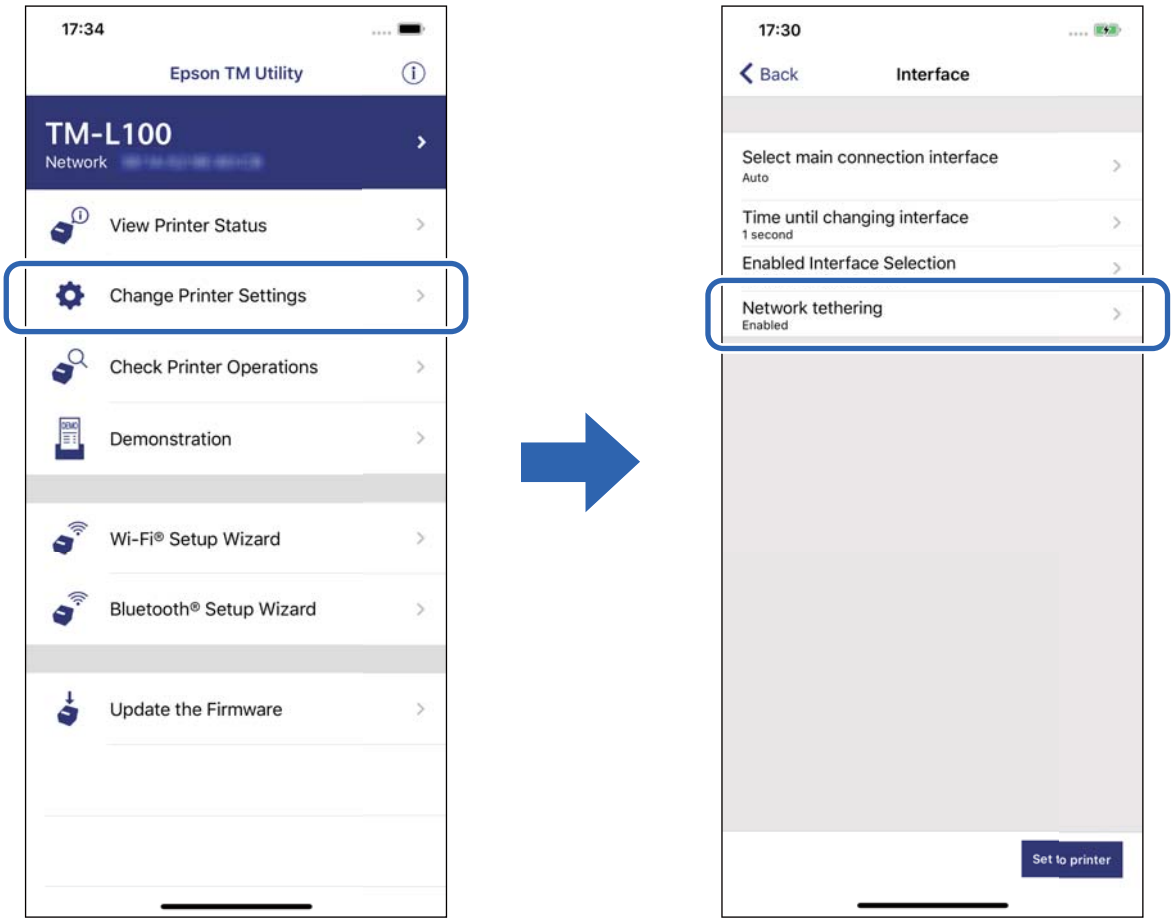

NOTE

See "Download" on page 116 for information on how to get Epson TM Utility.

Enabling by Using TM-L100 Utility

Select [Detailed Settings] - [Interface] - [Network tethering] in that order, and then enable (or disable) it. For more details, see TM-L100 Utility User's Manual.

Enabling in the Software Settings Mode

Select [3. Customize Value Settings] - [13. Other Settings] - [8. Network Tethering] in that order, and then enable (or disable) it.

See "Software Settings" on page 78.

Connection Procedure

Follow the procedure below to connect a tablet using the tethering function.

1 **Connect the printer to a wired network.**

2 **Turn on the printer, and then wait until the Ethernet LED stops flashing and stays on.**

3 **On the iOS device, tap [Settings] - [Wi-Fi], and disable Wi-Fi.**

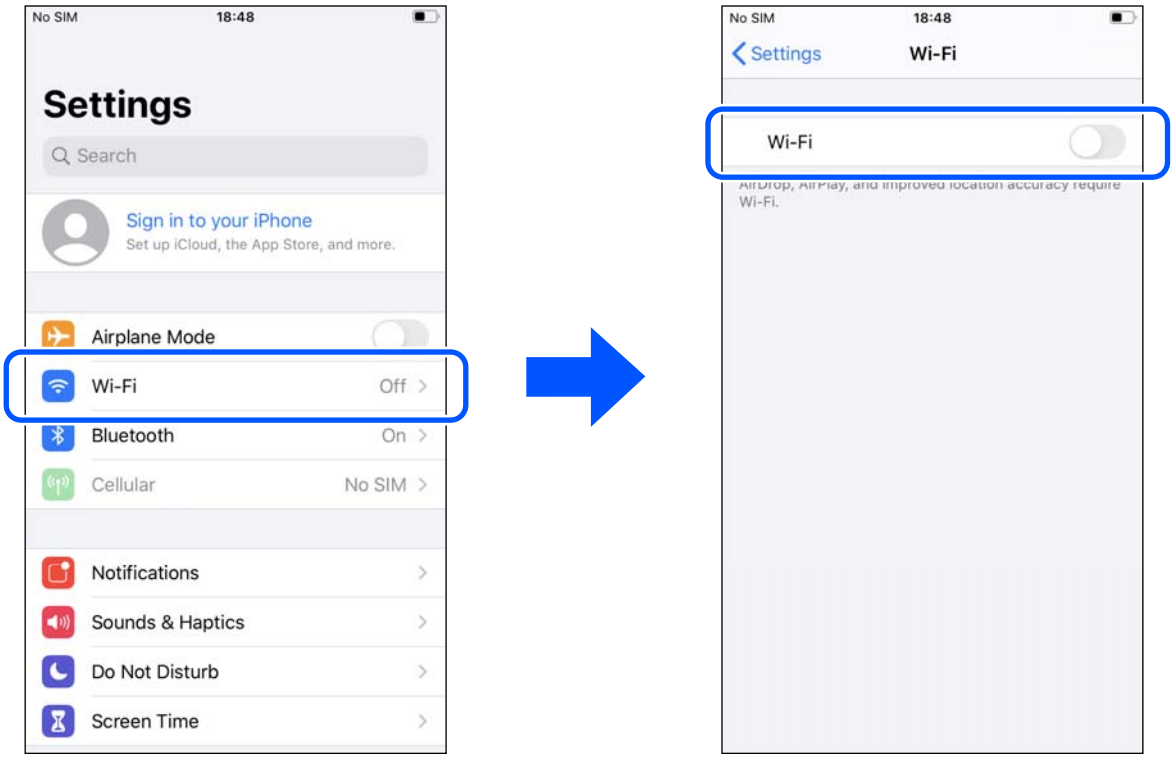

4 **Connect the iOS device to the printer using a Lightning to USB cable.**

Make sure to connect the cable to the USB-A Device Charging connector (white connector).

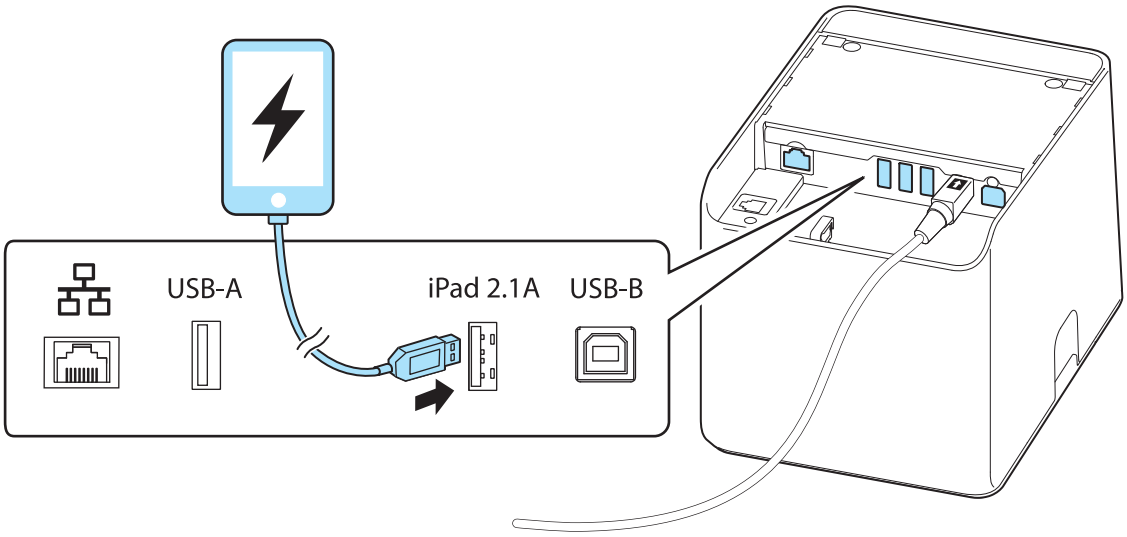

5 **On the iOS device, tap [Settings] - [Ethernet], and then check that an IP address has been set.**

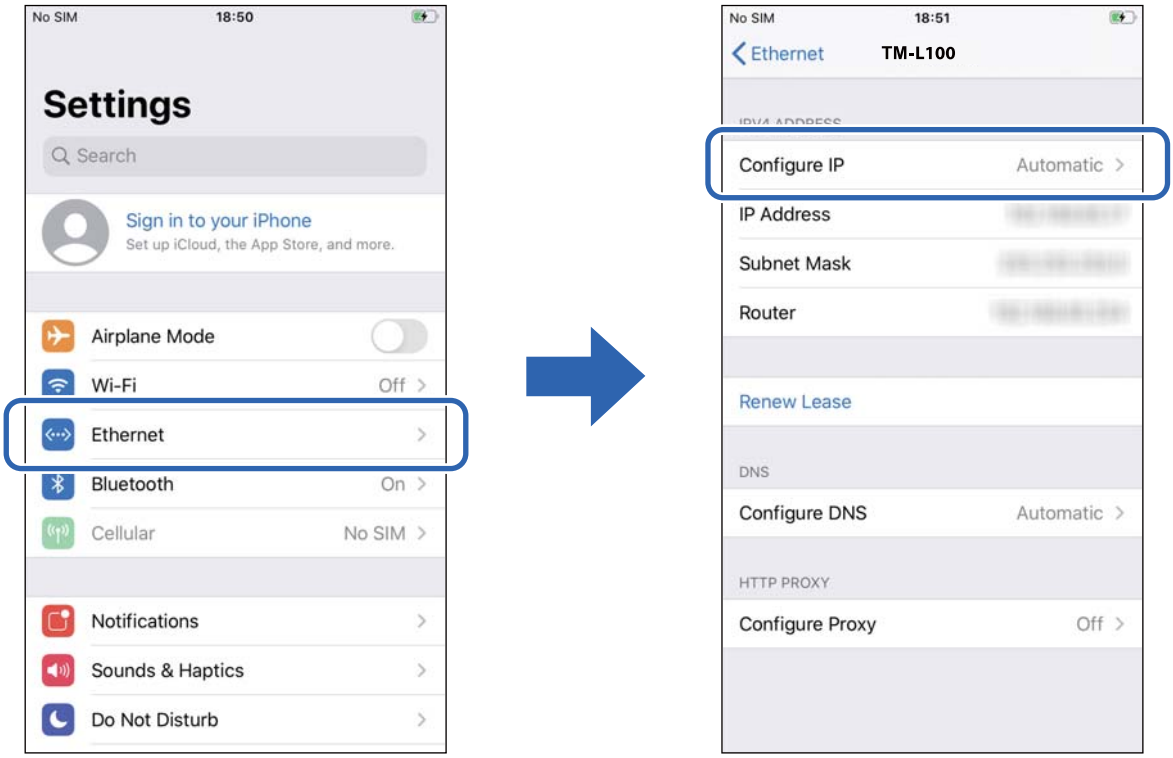

NOTE

- If [Ethernet] does not appear in [Settings] of the iOS device, the tethering function of the printer might have been disabled. See "Enabling the Tethering Function" on page 108 to enable the tethering.
- If a DHCP server is not used in the network, set the IP address and subnet mask manually.
- To print from the iOS device, select one of the interfaces; USB or network, in the application.

Application Development Information

This chapter describes how to control the printer and gives information useful for printer application development.

Controlling the Printer

The printer supports the following command systems:

- ePOS-Print XML
- ePOS-Device XML
- ESC/POS

Users can control the printer by using the aforementioned commands, or the following development kits or drivers.

- Epson ePOS SDK
- OPOS ADK
- OPOS ADK for .NET
- EPSON Advanced Printer Driver (APD)

ePOS-Print XML

ePOS-Print XML is Epson's original control command system for POS printers defined in XML.

Request messages in XML format created by the application side are sent to the supported printer via HTTP communication. The ePOS-Print Service embedded in the supported printer interprets the request message and prints. For details on ePOS-Print XML, refer to the ePOS-Print XML User's Manual.

ePOS-Device XML

ePOS-Device XML is Epson's original control command system for POS printers defined in XML.

Request messages in XML format created by the application side are sent to the supported printer via Socket communication. The ePOS-Device Service embedded in the supported printer interprets the request message and prints. It can also control customer displays and barcode scanners connected to the printer. For details on ePOS-Device XML, refer to the ePOS-Device XML User's Manual.

ESC/POS

ESC/POS is the Epson original printer command system for POS printers and customer display. With ESC/POS commands, you can directly control all the printer functions, but detailed knowledge of printer specifications or combination of commands is required, compared to using drivers and applications.

For detailed information about ESC/POS commands, see the ESC/POS Command Reference for TM Printers that can be accessed from the following URL:

☞ https://support.epson.net/publist/reference_en/

Controlling the Cash Drawer

A pulse output is sent to drawer kick connector pin 2 or pin 5, and you can open the drawer.

You can also check the open/close status of the drawer by checking the signal level of the drawer kick connector pin 3.

These controls are executed by a driver or by commands.

ESC/POS Commands

Prepare the output command for the specified pulse and the status transmission command.

For details, see the ESC/POS Command Reference.

For Windows Printer Drivers (APD)

You can set the drawer to open when printing is started. For details, see the manual for drivers.

For details on control, see the manual for Status API of the driver.

OPOS (OCX Driver)

Register a cash drawer using the SetupPOS Utility, and control using the OpenDrawer method or the DirectIO function.

For details, see the "EPSON OPOS ADK MANUAL APPLICATION DEVELOPMENT GUIDE Cash Drawer" and the "UnifiedPOS Specification".

OPOS for .NET

Register a cash drawer using the SetupPOS Utility, and control using the OpenDrawer method or the DirectIO function.

For details, see the "EPSON OPOS ADK for .NET MANUAL Application Development Guide Cash Drawer (EPSON Standard)" and the "UnifiedPOS Specification".

Epson ePOS SDK

The output command for the drawer kick pulse and the status transmission command are provided in each SDK library. For details, see the user's manuals provided with each SDK.

NOTE

- Whether or not pin 2 or pin 5 operates the drawer kick connector depends on the connected cash drawer.
- When using the built-in buzzer and cash drawer, set each to pin 2 (pulse 1) or pin 5 (pulse 2) of the drawer kick connector.
- You can acquire documents regarding the UnifiedPOS from the following link.
  https://www.omg.org/spec/UPOS

Controlling the Optional External Buzzer

You can set the optional external buzzer to buzz when an error occurs and when an automatic cut off occurs.
By using the driver or the command, you can specify when to sound the buzzer.
In addition, the beep pattern and how many times to sound the buzzer can be changed.

ESC/POS Command

Use the buzzer control command or the output command for the specified pulse.
For details, see the ESC/POS Command Reference.

For Windows Printer Drivers (APD)

Use the DirectIO function or the API for opening the drawer. For details, see the manual for Status API of the drivers.

OPOS (OCX Driver)

Register a POS printer using the SetupPOS Utility and control using the DirectIO function.
For details, see the "EPSON OPOS ADK MANUAL APPLICATION DEVELOPMENT GUIDE POSPrinter (TM Series)".

OPOS for .NET

Register a POS printer using the SetupPOS Utility and control using the DirectIO function.
For details, see the "EPSON OPOS ADK for .NET MANUAL Application Development Guide POSPrinter".

Epson ePOS SDK

The command for the buzzer function is provided in each SDK library. For details, see the user's manuals provided with each SDK.

NOTE

For details on setting the optional external buzzer, see "Connecting the Optional External Buzzer" on page 42.

Software

The following software is provided for application development.

Development Kit

Software	Description
Epson ePOS SDK	This is a development kit for controlling TM printers from native applications of smart devices or web applications. This includes libraries, manuals, and sample programs.
EPSON OPOS ADK	This OCX driver can control POS peripherals using OLE technology.*1 Because controlling POS peripherals with vendor specific commands is not required on the application side, efficient system development is possible.
EPSON OPOS ADK for .NET	The OPOS ADK for .NET is a POS industry standard printer driver compatible with Microsoft POS for .NET. It allows you to develop applications that are compatible with the UPOS (Unified POS) specification. When developing applications, use a separate development environment such as Microsoft Visual Studio .NET.
Epson TM Print Assistant	A native application that relays print data between an application and the TM printer. Epson TM Print Assistant allows you to develop a system that enables printing from a Web application or a URL-scheme capable application such as FileMaker, on a smart device connected to the TM printer.

*1: OLE technology developed by Microsoft divides software into part blocks. The OPOS driver is presupposed to be used with a development environment, such as Visual Basic, unlike ordinary Windows printer drivers. It is not a driver to be used for printing from commercial applications.
You can acquire documents regarding the UnifiedPOS from the following link.
https://www.omg.org/spec/UPOS

Drivers

Software	Description	Operating environment
EPSON Advanced Printer Driver (APD)	In addition to ordinary Windows printer driver functions, this driver has controls specific to POS. The Status API (Epson original DLL) that monitors printer status and sends ESC/POS commands is also attached to this driver.	Windows
EPSON TM Virtual Port Driver	This is a serial/parallel-USB/LAN conversion driver to make an Epson TM/BA/EU printer connected via USB or LAN accessible from a POS application through a virtual serial or parallel port. It allows you to directly control devices connected via USB or LAN with ESC/POS commands without making changes in the POS application that controls devices connected via a serial or parallel interface.	Windows

Utilities

Software	Description	Operating environment
TM-L100 Utility	A utility for checking and changing various printer settings. Use this utility to: • Check the current settings • Test operation • Store logos • Set paper saving • Set printing control • Set communication interfaces • Configure the network settings • Configure the TM-Intelligent function settings • Save/restore settings	Windows
Epson TM Utility	A utility that is available on the App Store or Google Play. Use this to perform wireless connection setup and change settings on the printer from iOS and Android devices. In addition, the utility has the following functions. • Sample receipt printing • Printer status display • Quick pairing by NFC/QR code • Firmware update	iOS, Android
TM Bluetooth Connector	Pairs the Bluetooth printer with your device, and sets the Bluetooth port to be used by the printer driver and/or an application. Using this software makes it easy to pare the printer because the software searches for and displays only Epson Bluetooth printers, and allows you to search the printer by its product name.	Windows
Deployment Tool	Use to make network and printer settings simultaneously. Allows you to make settings efficiently at the time of introducing TM printers for the first time, or when configuring multiple TM printers at the same time.	Windows
Monitoring Tool	Use to check a list of status for the Epson printers connected to the network. You can also update certificates for multiple printers used for WPA-Enterprise in a batch.	Windows
TM-L100 Firmware Updater	Use this tool to update the printer's firmware. An executable file and the firmware are packaged together.	Windows

Others

Manual	Description
ePOS-Print XML User's Manual	Describes ePOS-Print XML statements. Sample programs are included.
ePOS-Device XML User's Manual	Describes ePOS-Device XML statements. Sample programs are included.
Server direct print User's Manual	Describes how to develop a system using the server direct print function. Sample programs are included.

Download

You can obtain software and manuals from one of the following URLs.

For customers in North America, go to the following web site:

☞ https://www.epson.com/support/

For customers in other countries and regions, go to the following web site:

☞ https://epson.sn

Precautions when Developing Applications

This section describes information that you should be aware of when developing systems and applications using this product.

Paper Removal Standby Setting

The “Paper Removal Standby” function feeds the printed paper to the position where it can be cut and then stops it. The next print job begins after you remove the paper. ("Software Settings" on page 78)

To use the printer with the Paper Removal Standby function enabled, the printer firmware must be Ver. 1.08 ESC/POS or later.

CAUTION

- When this function is enabled, the operation of the following peripheral devices connected to the printer may be stopped in addition to printing. Even in this case, operation can be resumed by removing the paper that is waiting to be removed.
  - ∗ Customer display
  - ∗ Handheld scanner
  - ∗ Buzzer (built-in, external)
  - ∗ Drawer
- Be sure to enable the paper removal detector when using liner-free label paper.
- Be sure to disable the paper removal detector when using plain thermal paper.
- Backfeed is not performed when the paper removal detector is disabled.

NOTE

- To have the buzzer sound when the printer is waiting for paper removal, set it in “Paper removal standby: frequency” under “Software Settings”. The above limitations do not apply in this case. ("Software Settings" on page 78)
- If using a drawer, the above limitations do not apply if the drawer is opened before executing printing.

Power Supply SW Setting

The “Power Supply SW Setting” function allows you to disable power on/off with the power button. ("Software Settings" on page 78)

Power Supply SW Setting	Description
Enabled	The power button is enabled and the printer can be turned on or off with the button. If the power is turned off by the breaker, turning on the breaker will also turn on the power of the printer.
Disabled	The power button is disabled. Use the breaker to turn the printer on and off.

NOTE

If you want to turn off the printer without using the power button, it is recommended that you send the command to execute the power-off process to the printer before turning it off. This will save the latest maintenance counter values. The maintenance counter values are usually saved every two minutes. For more information about the command, see the ESC/POS Command Reference.

Application Development and Distribution for iOS

If your application enables communication with the printer using Bluetooth or a Lightning-USB cable, Epson must submit the application to Apple before you submit it to the App Store. Please apply for each application you want to submit to the App Store from the URL below.

☞ https://global.epson.com/products_and_drivers/tm/en/mfi.html

Notes on Printing Barcodes and Two-Dimensional Symbols

- Ensure adequate space around the code; “quiet zone” that is required for the code.
- To print PDF417 (two-dimensional symbol), the following settings are recommended.

  Module height: 3 to 5 times the module width

  Vertical size of the symbol: approximately 5 mm {0.20"} or more
- The recognition rate of ladder bar codes and two-dimensional symbols may vary depending on widths of the modules, print density, environmental temperature, type of paper, and characteristics of the reader. Make sure to check the recognition rate beforehand to determine the settings and use conditions so that the restrictions of the reader are satisfied.
- Reading quality of multi-gradation bar codes and two-dimensional symbols is not guaranteed.
- When printing a ladder barcode or two-dimensional symbol that is created as a graphics data, set the print speed to level 5.

Appendix

Product Specifications

Printing Specifications

Printing method		Thermal line printing		
Dot density		0.125 × 0.125 mm/dot (203 × 203 dpi)		
Paper feed		Frictional feeding		
Paper width		40 mm	58 mm	80 mm
Printing width		35 mm {1.38"}, 280 dots	52.5 mm {2.07"}, 420 dots	72.0 mm {2.83"}, 576 dots
The number of characters	Font A	23	35	42 (42 characters mode) 48 (standard characters mode)
	Font B	31	46	55 (42 characters mode) 64 (standard characters mode)
Maximum print speed		• Up to 170 mm/s • Up to 90 mm/s when printing ladder barcodes or two-dimensional symbols • Up to 25 mm/s when Number of head energizing parts is set to 4 divisions.		
Line spacing		3.75 mm {1/5"}		

dpi: dots per inch

CAUTION

- The print speed changes automatically depending on the applied voltage, head temperature, and print density.
- The maximum print speed may not be reached depending on the data transmission conditions and combination of commands.
- When the printing speed fluctuates or intermittent printing occurs due to data transmission conditions, variations in print density or white streaks may occur.

NOTE

- The image quality of barcodes may be degraded depending on the paper you are using. Please print in advance to check if there is any problem with the quality of the barcode. If there is a problem, reduce the printing speed (recommended: 90mm/s) or increase the size (module size) to ensure the barcode quality.
- Liner-free label paper using adhesive may cause disturbance in the paper feed pitch due to changes in the peeling force of the paper from the roll paper. If you use such label paper, please check for any problems beforehand.

Character Specifications

Character set		ANK	95 alphanumeric characters
			128 extended graphics characters × 43 pages (includes user-defined pages)
			18 international character sets
		Japanese	6,879 characters of JIS X0208-1990, 845 special characters
			11,233 characters of JIS X0213:2004, One special character
		Simplified Chinese	28,806 characters of GB18030-2022 (Lv.2)
		Traditional Chinese	13,502 characters of Big5
		Korean	8,224 characters of KSC5601
Character code*1		Japanese	ISO-2022-JP / Shift_JIS / Shift_JIS-2004
		Simplified Chinese	GB18030-2022 (Lv.2)
		Traditional Chinese	Big5
		Korean	KSC5601
		Unicode*2	UTF-8
The number of dots per character	Standard mode	ANK Font A	12 × 24 (includes 2-dot horizontal spacing)
		ANK Font B	9 × 17 (includes 2-dot horizontal spacing)
		Kanji Font A	24 × 24
		Kanji Font B	Japanese: 20 × 24 Korean: 16 × 16
		Special Font A	12 × 24 (includes 2-dot horizontal spacing)
		Special Font B	9 × 24 (includes 2-dot horizontal spacing)
	42 characters mode (only when using 80 mm width paper)	ANK Font A	13 × 24 (includes 3-dot horizontal spacing)
		ANK Font B	10 × 17 (includes 3-dot horizontal spacing)
		Kanji Font A	26 × 24 (includes 2-dot horizontal spacing)

Character size*3 Standard/Double height/ Double width/Double height and width	Standard mode	ANK Font A	1.50 × 3.00 mm
		ANK Font B	1.13 × 2.13 mm
		Special Font A	1.50 × 3.00 mm
		Special Font B	1.13 × 3.00 mm
		Kanji Font A	3.00 × 3.00 mm
		Kanji Font B	Japanese: 2.50 × 3.00 Korean: 2.00 × 2.00
	42 characters mode (only when using 80 mm width paper)	Special Font A	1.63 × 3.00 mm
		Special Font B	1.25 × 2.13 mm
		Kanji Font A	3.25 × 3.00 mm

*1: Installed character codes vary by printer model.

*2: Only the character sets installed on the printer can be printed.

*3: Space between characters is not included. Characters can be scaled up to 64 times as large as the standard size.

NOTE

By specifying UTF-8 character encoding, all the installed character sets can be printed.
For more details on printing Unicode characters, see "FS (C" of the ESC/POS command reference, or manual of the software you use. ("Application Development Information" on page 111)

Barcode/ two-dimensional symbol printing	UPC-A, UPC-E, JAN8 / EAN8, JAN13 / EAN13, Code39, Code93, Code128, Code128 auto, ITF, CODABAR(NW- 7), GS1-128, GS1 DataBar, PDF417, QR code, Maxi Code, Data Matrix, Aztec Code, Two-dimensional GS1 DataBar, Composite Symbology

Auto Cutter

Type	Detachable V-shaped blade cutter
Cutting method	Partial cut (cutting with one point in center left uncut)

NOTE

- When taking off the cut paper, the paper is pulled at the cut position and it may cause line spacing of the next print to partially narrow.
- To prevent the uneven line spacing, when printing after paper cutting, it is recommended to advance the paper by approximately 1 mm {16/406 inch} immediately before printing.
- If the paper is short in vertical length, advance the paper at least 35 mm {1.38 inch}.

Paper Detector

Roll paper end detector	Detects the presence or absence of paper in the paper path. When roll paper end is detected, printing is stopped. Printing is resumed when a roll paper is set and the roll paper cover is closed.
Paper removal detector	Detects the presence of printed paper that was cut off with the autocutter. The next printing is started when cutting with the autocutter is finished and the printed paper is removed. Before starting the next printing, the top margin can be adjusted by feeding paper backward. For information about the setting, see GS (E <Function 5>. Liner-free label paper should be used with the paper removal detector enabled. Plain paper should be used with the paper removal detector disabled.

Roll Paper Feeder

Loading method	Drop-in paper loading
Paper width	40 mm, 58 mm, 80 mm

NOTE

- Do not use a deformed roll paper. Take up any slack in the roll paper when loading it.
- When shipped from the factory, the 58-mm width roll paper guide is set to use 58 mm wide roll paper. Remove or attach the roll paper guide(s) according to the width of the roll paper to be used. (Changing the Paper Width)
- The paper width setting of the printer is automatically switched depending on whether or not the 58-mm width roll paper guide is set. If it is set, the paper width is set to 58 mm; if it is not set, the paper width is set to 80 mm. You need to change the paper width setting manually only when using 40 mm wide roll paper.

CAUTION

Once you print on 40 or 58 mm wide roll paper, do not change to a wider paper (change from 40 to 58 or 80 mm, or change from 58 to 80 mm). If you do so, the following problems may occur.

- The printout is faint.
- There are areas or dots that cannot be printed.
- Black vertical streaks appear on printout.
- If 40 mm width or 58 mm width paper is skewed during printing, color of paper edge surface may change.
- The autocutter cannot cut paper partially or fully, or the cut end is not clean.
- The printer cannot feed paper normally.
- A paper jam occurs.

Paper Specifications

		Paper width 40 mm	Paper width 58 mm	Paper width 80 mm
Type		Certified thermal paper		
Form		Roll		
Paper width		39.5 +/- 0.5 mm (Liner-free label paper only)	57.5 +/- 0.5 mm	79.5 +/- 0.5 mm
Size	Roll paper diameter	Up to 102 mm		
	Width	Liner-free label paper 39.5 +1/-0.5 mm	Plain thermal paper 57.5 +1/-0.5 mm Liner-free label paper 57.5 +1/-0.5 mm	Plain thermal paper 79.5 +1/-0.5 mm Liner-free label paper 79.5 +1/-0.5 mm
	Core diameter	Plain thermal paper 18 mm or larger		
		Liner-free label paper 31.8 mm or larger		

NOTE

- Paper must not be glued to the roll paper core.
- Use liner-free label paper that has a core with anti-sticking treatment.
- The width of core should be the same as the paper width, or smaller within the range of 1 mm or less. (Within the roll paper winding width)
- When marking the end of paper on the printed surface, use ink that does not adversely affect the printing and thermal head.
- Even when using labels that has glue on its entire surface, use one that has no glue in the range of 1 mm or more from the paper edge.
- To ensure good print quality, it is recommended to set the print density ("Software Settings" on page 78) according to the paper to be used.
- It is recommended that you avoid using thermal paper that has been preprinted on the recording surface. Using such paper can cause the thermal head to stick to the thermal paper surface during printing, and cause printing failure and other problems. The pre-printing also can result in reduced print density. When using thermal paper that has been preprinted on the recording surface, perform preprinting according to the conditions recommended by the paper manufacturer (ink type, printing conditions, etc.), and confirm in advance that there are no printing defects, reduced printing density, or other problems with the thermal paper.

Specified Roll Paper Model Number

Liner-free label paper	Partially glued	ICONEX (USA) 40 mm wide paper: 9023-1275 (Lane Coated: 6 rolls) 9023-1257 (Lane Coated: 12 rolls) 58 mm wide paper: 9023-1823 (Lane Coated: 12 rolls) 9023-1397 (Lane Coated: 30 rolls) 80 mm wide paper: 9023-1274 (Lane Coated: 6 rolls) 9023-1253 (Lane Coated: 12 rolls)

NOTE

For the certified roll paper model number, please check "Epson Certified Media List for Thermal Receipt Printers" from the website below.
https://epson.sn

Certified Base Paper

In order to ensure print quality and reliability, the following certified base papers shall be used.

Paper type	Base Paper	Glue type	Manufacturer
Plain thermal paper	TF50KS-EY	--	NIPPON Paper Industries Co., Ltd.
Liner-free label paper	150PLS-LST	Glued entirely or strong adhesive	Ricoh Company, Ltd.
	HTFC14	Glued entirely or strong adhesive	Documotion Research,Inc. (StickyPOS)

Recommended Print Density for Certified Base Paper

Base Paper	Print Density
TF50KS-EY	115%
150PLS-LST	100%
HTFC14	120%
9023-1274, 9023-1253, 9023-1823, 9023-1397, 9023-1275, 9023-1257	115%

Liner-free label paper with black marks/Plain thermal paper

By printing black marks on the back of the paper, you can print or run autocut based on the position of the black marks. The black marks must meet the following conditions.

- The black marks should be printed on the back (non-printing side) of the paper.
- The reflectance (1) and (2) of each part of the paper shall satisfy the combination in the table below. Measure the reflectance on the back (non-printing side) of the paper.

Reflectance of black mark (1)	17% or more	16% or more	15% or more	14% or more	13% or more
Reflectance of a part without black mark (2)	90% or more	85% or more	80% or more	75% or more	70% or more

(For measuring the reflectance, use Macbeth reflectance meter PCM II (filter D) or an equivalent meter)

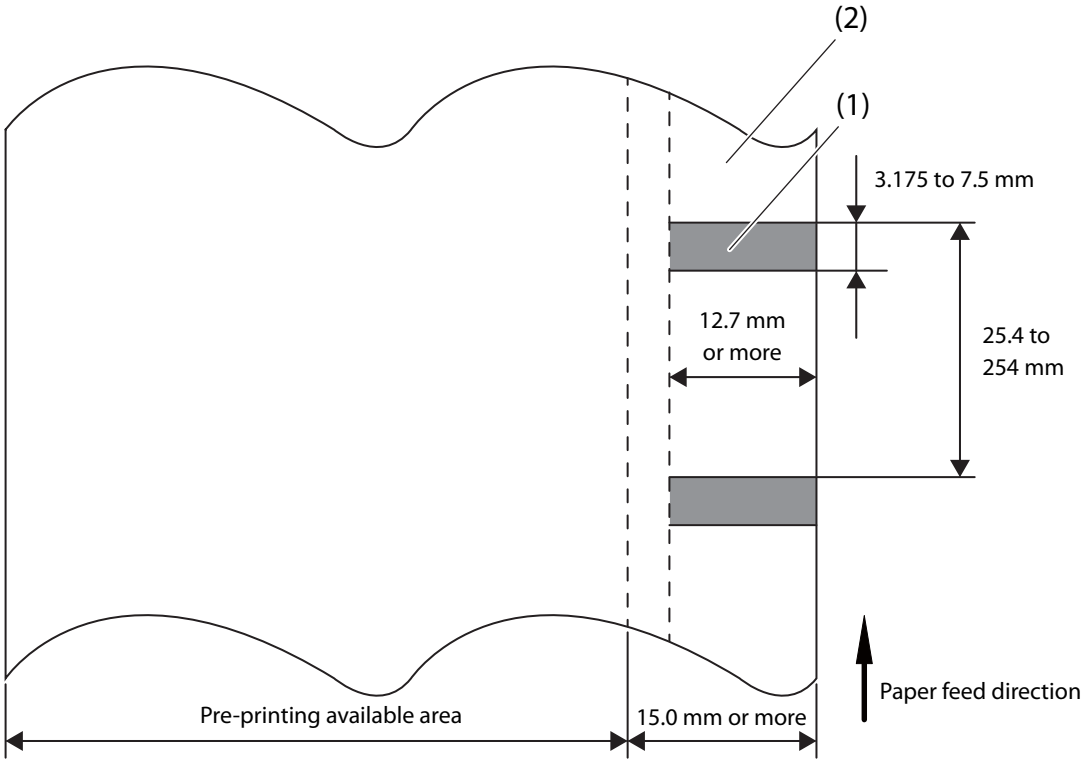

Back (non-printing side)

∗Pre-printing is not allowed in the range of 15 mm from the paper edges.

Restrictions on Printing Surface

Preprinting is prohibited within the detection area of the label removal detector.

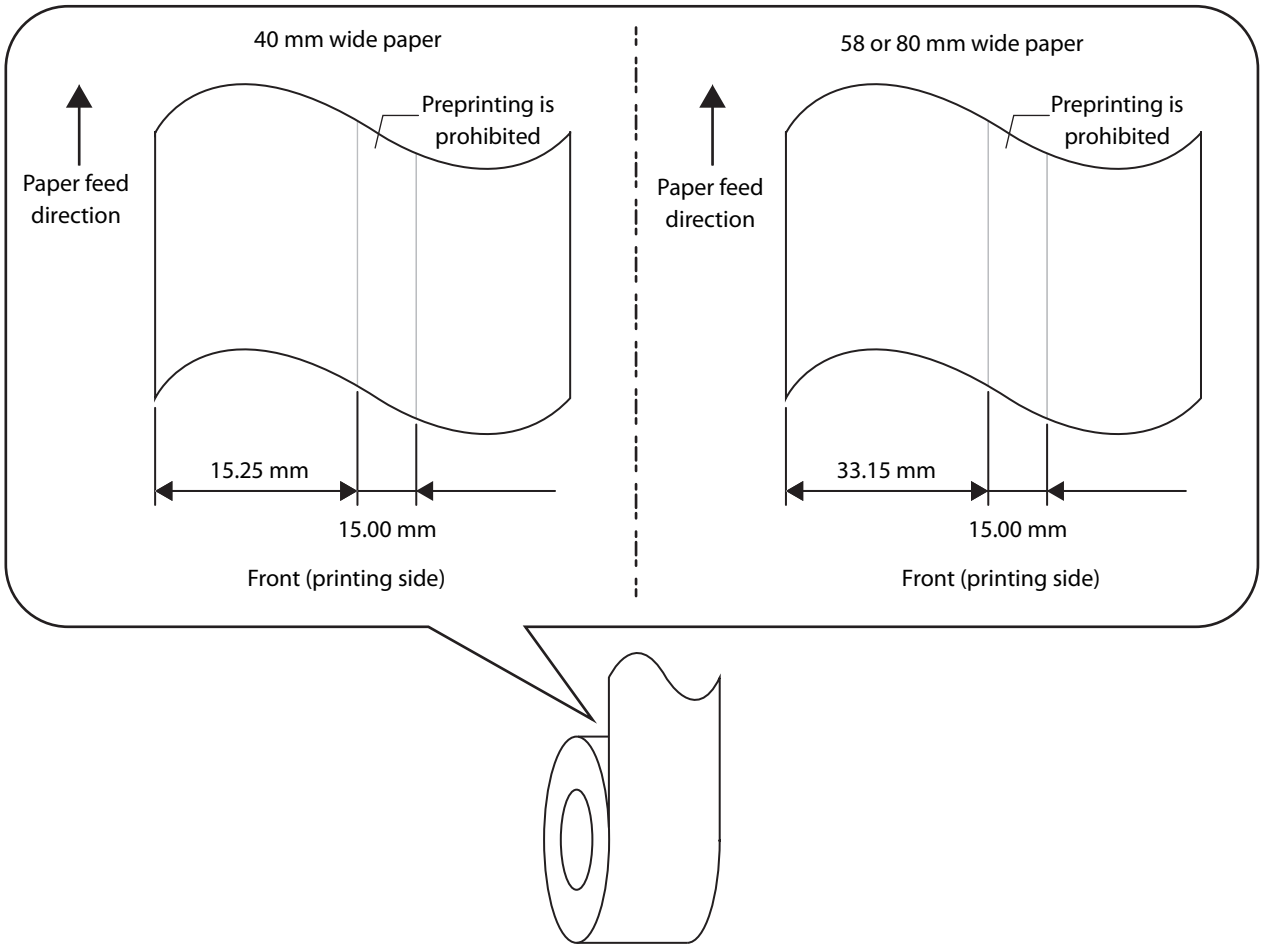

NOTE

- Preprinted thermal paper can cause printing defects or decrease in print density due to sticking of the thermal head to the recording surface. Therefore, it is preferable not to use preprinted thermal paper.
- When using preprinted thermal paper, perform preprinting according to the conditions recommended by the paper manufacturer (ink type, printing conditions, etc.), and confirm in advance that there are no printing defects, reduced printing density, or other problems with the thermal paper.

Printable Area

40 mm wide paper

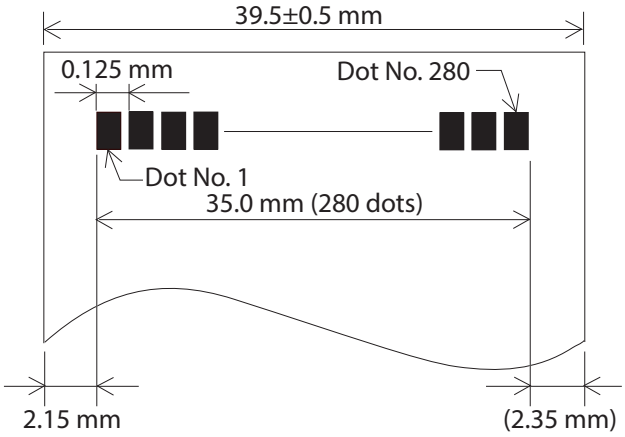

58 mm wide paper

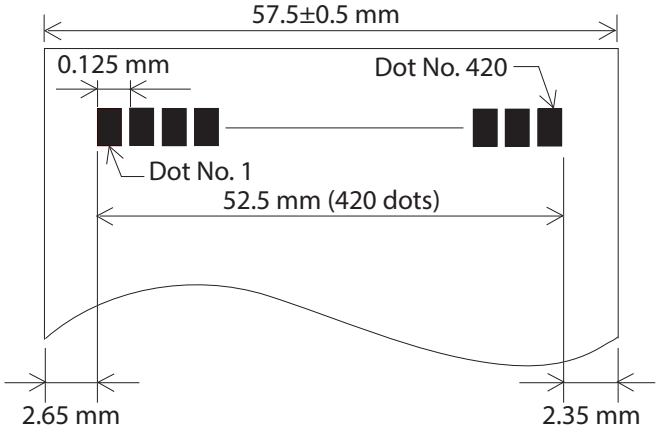

80 mm wide paper

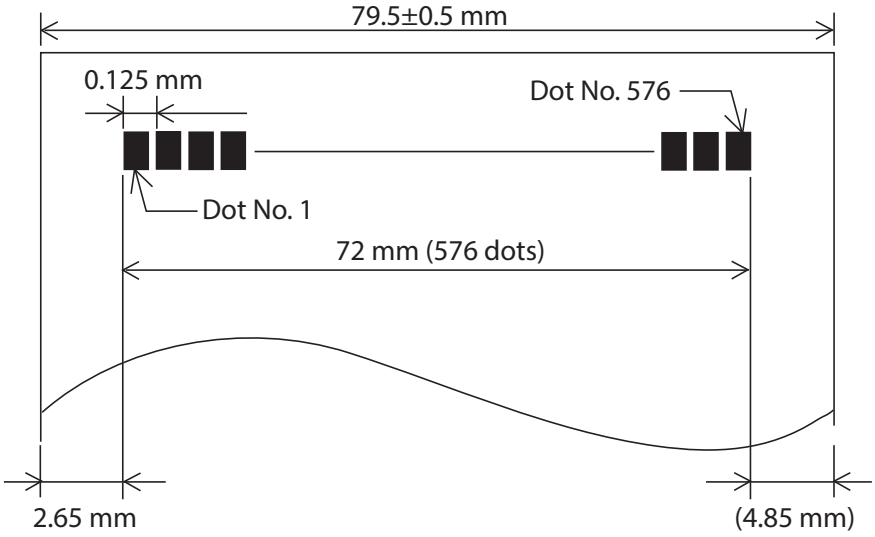

Printing and Cutting Positions

CAUTION

- Due to slack in or variations of paper, the actual cutting position will differ from the values shown below. Set the cutting position in consideration of the variations.
- To prevent paper jams and to ensure print quality, it is recommended to feed the paper at least 1 mm after paper cutting.
- To avoid paper jams when the printer is running under the operation environment, set the top margin to 5 mm {0.2"} or more from the autocut position by backfeed. Paper jams may be more likely to occur in hot and humid environments or when using paper that curls easily.

NOTE

- Printing position and cutting position will change according to the paper type and software settings. ("Software Settings" on page 78)
- The values are design center values for the location of the structure and are different from the top margin values.

When the paper removal detector is disabled (no backfeed)

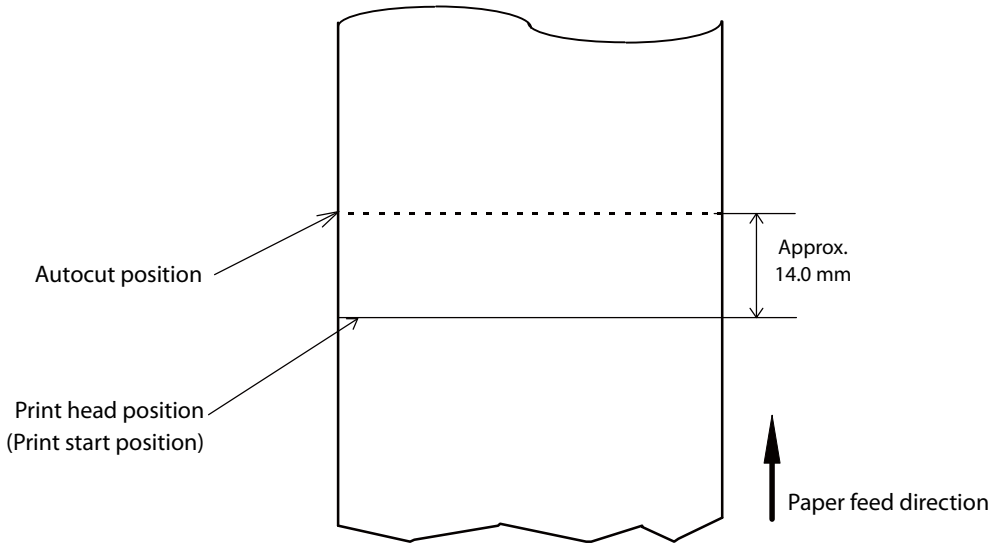

When the paper removal detector is enabled (with backfeed)

When the paper removal detector is enabled, the top margin can be changed by feeding paper backward.

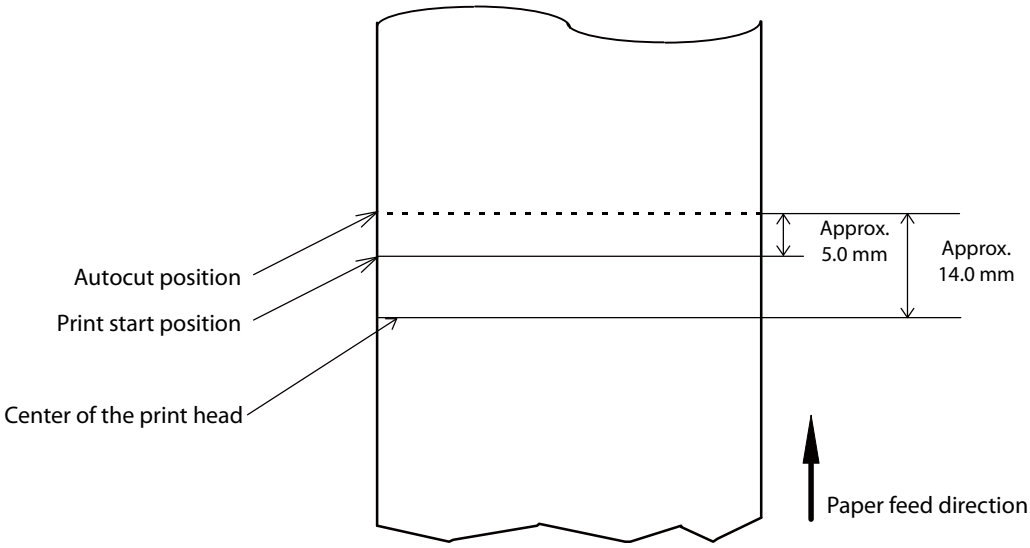

Built-in Memory

Receive buffer	1 MB (with firmware Ver.1.08 ESC/POS or later) 4 KB (other than above)
Area for downloaded characters	12 KB (also used for downloaded bit images)
Area for macro	2 KB
Area for NV graphics	384 KB
Area for downloaded graphics	208 KB
Area for user NV memory	1 KB

Electrical Specifications

Power supply		PS-190 (power supply with the AC adapter)
Operating voltage		DC 24 V
Current consumption (24V, 25°C, standard print density)	Operating	Approx. 1.8 A on average * When print ratio is approximately 18% * Font A * 48 characters mode * Printing ASCII characters (repeating 20h to 7Fh) in 30 lines + paper feed 5 lines + Autocut
	Standby	Approx. 0.1 A on average
AC power consumption*1 (100 - 230 V/50 - 60 Hz)	Operating	Approx. 31.3 W
	Standby	Approx. 1.6 W

*1: Average power consumption measured under our operating conditions. It varies depending on the conditions of use and the model.

Reliability

	Liner-free label paper	Plain thermal paper
Printer mechanism	10 million lines (When a specific pattern is printed repeatedly)	20 million lines (Each line is 3.75 mm, and 10 lines are assumed to be printed repeatedly for every 15 lines of paper feed.)
Thermal print head	75 km (With recommended print density and print speed) Note: 75 million dots per heating element	150 km (With recommended print density and print speed) Note: 150 million dots per heating element
Auto Cutter	1 million cuts	2 million cuts (With certified paper: TF50KS-EY)
MTBF*2	360,000 hours *When using liner-free label paper for printing 10 million lines of product life. A failure is an accidental failure in the accidental failure period.	360,000 hours *When using thermal paper for printing 20 million lines of product life*1. A failure is an accidental failure in the accidental failure period.
MCBF*3	Print 35 million lines * Indicates overall mean time between failures including wear and accidental failures, over a product life of 10 million lines of print.	Print 70 million lines * Indicates overall mean time between failures including wear and accidental failures, over a product life of 20 million lines of print.

*1: Indicates the point at which the wear-out failure period starts.

*2: Indicates the mean time between failures during the random failure period.

*3: Indicates the overall mean time between failures, including wear-out and random failures, before the life is reached.

NOTE

- Reliability varies depending on the paper used. For details, contact Epson sales company.
- If paper dust or glue from roll paper accumulates inside the printer, it may cause poor printing, erratic paper feeding or cutting, or paper jamming. It is recommended to clean the inside of the printer periodically (about once every 6 months) or when it becomes noticeably dirty. For the cleaning method, see "Cleaning the Printer" on page 73.
- If liner-free label paper is left in the printer for a long period of time, the liner-free label paper may stick to the platen roller and paper jams may easily occur. If a paper jam occurs, perform the specified cleaning.
- If a paper jam occurs even after cleaning, replace the platen roller.

Environmental Conditions

Temperature / Humidity	Operating	**When using plain thermal paper** 5 to 45 degrees C, 10 to 90% RH, non condensing
		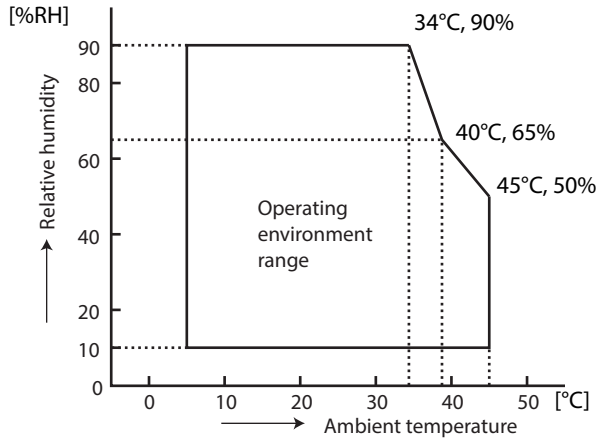
		When using liner-free label paper Temperature and humidity range guaranteed by the liner-free label paper.
	Storage	-10 to 50 degrees C, 10 to 90% RH (excluding paper)
Vibration resistance	When packed	Frequency: 5 to 55 Hz Acceleration: Approx. 19.6 m/s^2 {2G} Sweep: 10 minutes (half cycle) Time: 1 hour Orientation: x, y, and z After being subjected the vibration, there should be no visual or operational problems on the exterior or interior.
Shock resistance	When packed	Packing: Epson standard package specifications Height: 60 cm {23.62"} Orientation: 1 corner, 3 edges, and 6 surfaces After being dropped, there should be no visual or operational problems on the exterior or interior.
	When unpacked	Height: 5 cm {1.97"} Orientation: Lift one edge and release it (for all 4 edges) After being dropped while not operating, there should be no visual or operational problems on the exterior or interior.
Noise	Operating	Approx. 52 dB (ANSI bystander position) Note: The above noise value is based on Epson evaluation conditions. Noise varies depending on the paper used, printing contents, and the setting values, such as print speed or print density.
Waterproof performance		IPX2 compliant (only when installed vertically) Note: This is the result of an evaluation conducted by a third party evaluation organization based on JISC0920 (IEC60529:2001), and does not guarantee conformance to the standard, no damage, or no failure.
Altitude		Approx. 3,000 m or less

External Dimensions and Weight

External dimensions (wide × depth × height)	When installed vertically: 140 × 148.5 × 207 mm {5.52 × 5.85 × 8.15 inch} When installed horizontally: 140 × 205 × 151 mm {5.52 × 8.07 × 5.95 inch} (including rubber feet)
Weight	Approx. 1.9 kg (excluding paper weight)

Dimensional Outline Drawing

When installed Vertically

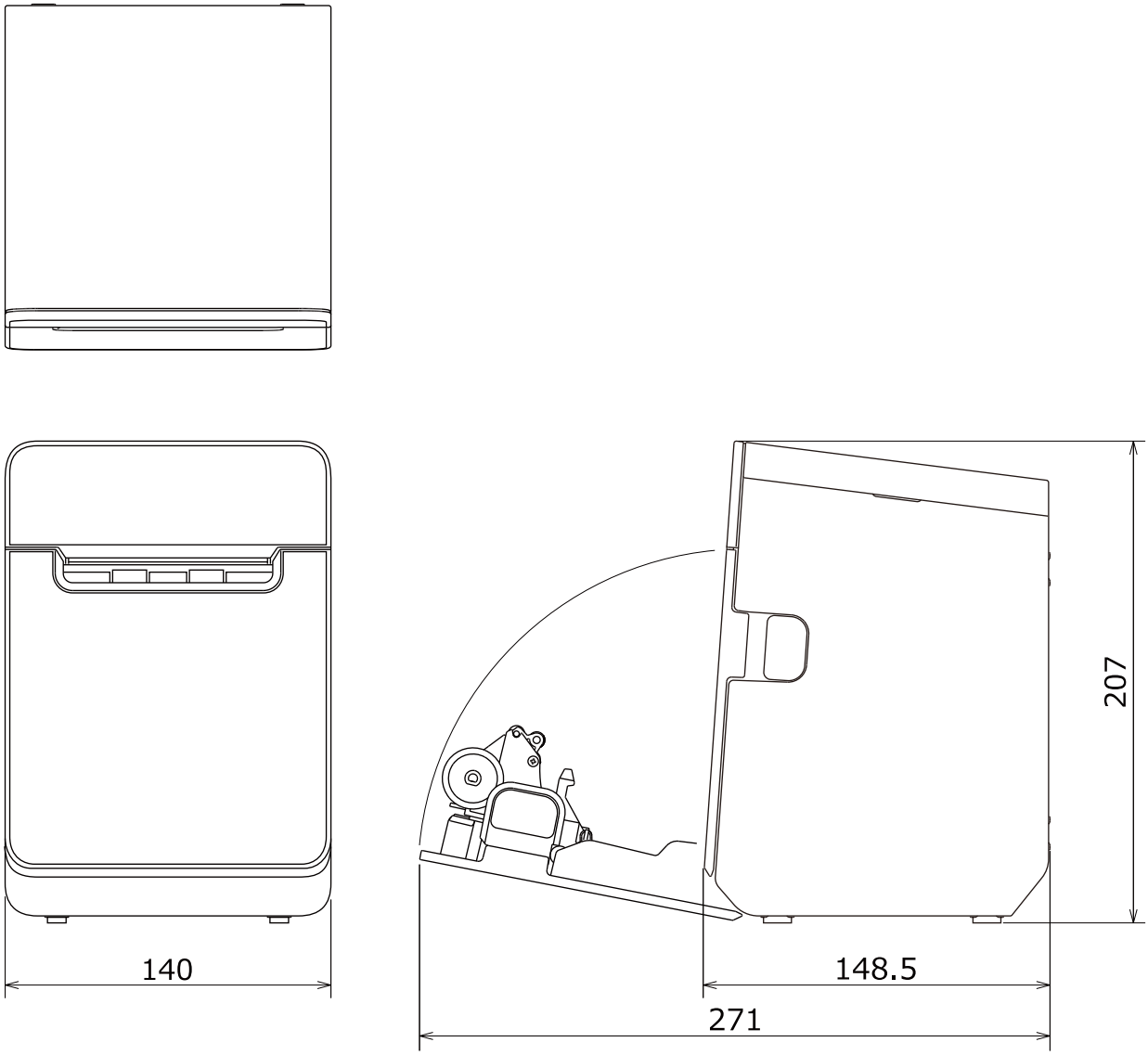

[Unit: mm]

When installed Horizontally

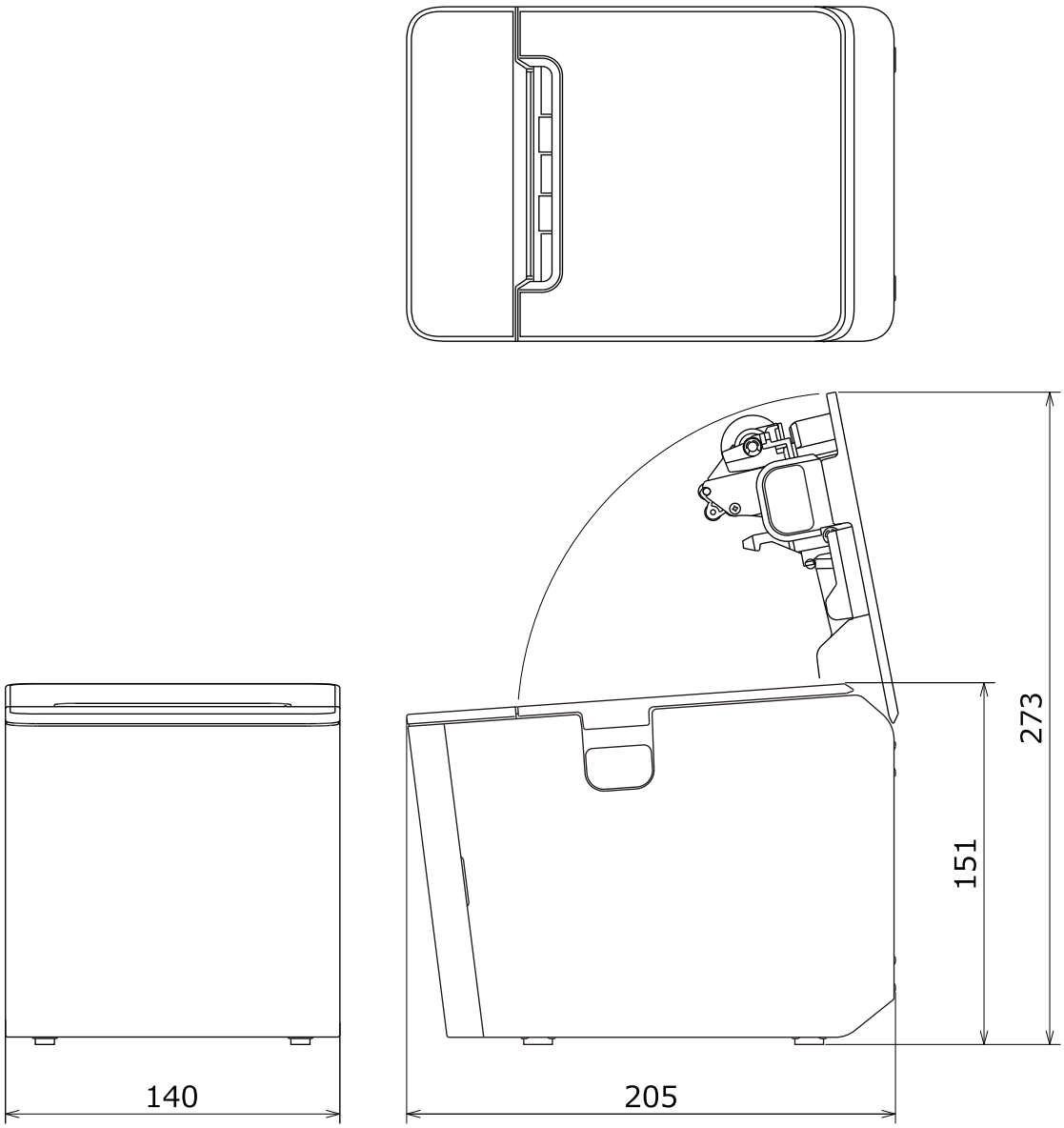

[Unit: mm]

Specifications of Interface and Connector

USB Interface

USB interface connector

USB type-B connector

USB transmission specifications

USB function

Item		Specification
Overall specifications		According to USB 2.0 specifications
Transmission speed		USB Full-Speed (12 Mbps)
Transmission method		USB bulk transmission method
Power supply specifications		USB self power supply function
Current consumed by USB bus		2 mA
USB packet size (with full-speed connection)	USB bulk OUT (TM)	64 bytes
	USB bulk IN (TM)	64 bytes
USB device class		Both USB vendor-defined class and USB printer class are supported.

NOTE

To set the USB device class, see "Software Settings" on page 78.

USB descriptor

		USB vendor-defined class	USB printer class
Vendor ID		04B8h	04B8h
Product ID		0202h	0E2Ah
String Descriptor	Manufacturer	EPSON	EPSON
	Product	TM-L100	TM-L100
	Serial number	Character string based on the product serial number	Character string based on the product serial number

Network Interface

For both Ethernet interface and Wi-Fi interface

Support protocols

Protocols	Usage
IP, ARP, ICMP, UDP, TCP	Basic communication protocols
LP, LPR, TCP Socket Port	Printing protocols
HTTP/HTTPS	Used in ePOS-Print, ePOS-Display, and EpsonNet Config (Web version)
SNMP, ENPC	Used in setting and monitoring
DHCP, APIPA	Used in automatic setting for the IP address and so on

Network parameters

Item	Initial settings
IP address acquisition	Automatic
APIPA	Disabled
arp/ping	Disabled
Socket Timeout	90 seconds
Community name 1 (Read Only)	Fixed at "public"
Community name 2 (Read/Write)	Unavailable
SNMP IP Trap 1	Disabled
SNMP IP Trap 2	Disabled
Communication mode	Auto negotiation

Printing communication protocol

- LP, LPR: Transfers printing data
- TCP Socket Port: Transfers printing data and printer status via bidirectional direct socket communication.

LP, LPR

- Max. simultaneous connections: 6
- Number of connections for which printing is available: 1 (occupied until the connection is released.)
- Time out: 90 seconds (changeable)
- Job cancel: Not available
- Banner printing: Not available

Socket communication

- Port type TCP communication port for direct printing
- Port number 9100
- Port communication direction bidirectional
- Max. simultaneous connections 6
- Number of connections for which printing is available 1 (occupied until the connection is released.)
- Time out: 90 seconds (changeable)

For Ethernet interface

Communication specifications

10BASE-T/100BASE-TX

For Wi-Fi Interface (With OT-WL06) (For Device charging model/Bluetooth model)

NOTE

- Countries and regions where Wi-Fi can be used are limited. Since notes are provided for each country, check the sheet supplied with the product.
- When using wireless LAN, make sure you disconnect the LAN cable. If a LAN cable is connected, wireless LAN is disabled.

Specification

- IEEE802.11b/g/n (2.4 GHz band) or IEEE802.11a/b/g/n/ac (2.4 GHz or 5 GHz band) compliant Wi-Fi communication compatible.
- Support the IP address automatic acquisition function (DHCP, APIPA).
- Infrastructure mode is supported.

Communication Standard

- IEEE802.11b (2.4 GHz)
- IEEE802.11g (2.4 GHz)
- IEEE802.11n (2.4 GHz)
- IEEE802.11a (5 GHz)
- IEEE802.11n (5 GHz)
- IEEE802.11ac (5 GHz)

Security

Security can be selected from among the following:

- WPA-PSK(AES)
- WPA2-Personal
- WPA2-Enterprise

Initial settings

These settings apply when the printer is initialized in the Interface Setup mode.

Parameter	Setting value
Communication standard	802.11b/g/n
Network mode	Infrastructure mode
SSID	EPSON_Printer
Encryption type	WPA2-Personal
Passphrase	EpsonNet
IP Address	Automatically acquired by DHCP

* You can connect to a WPA2-PSK (AES) access point using the settings above.

Settings in SimpleAP mode (Factory default settings)

Parameter	Setting value
SSID	DIRECT-TM-L100-“Product serial number”
Passphrase	See "Default Password for Setup / Default Passphrase for SimpleAP" on page 138".
IP Address	192.168.192.168
Subnet mask	255.255.255.0

* In SimpleAP mode, DHCP Server is working and assign IP address to host automatically.

Notes on using the Wireless LAN unit

- Keep the printer away from the devices, such as kitchen microwaves, that may cause radio wave interference.
- Use channels that are away from the frequency bands that may cause radio wave interference.
- Place shields between the printer and the devices that may cause radio wave interference.
- Select either 2.4 GHz or 5 GHz, whichever is free from radio wave interference.
- In auto channel setting for the access point, do not select a channel in which the printer may cause radio wave interference.

Notes on Wi-Fi connection

Because not all the combinations of the printer and Wireless LAN units have been checked for operation, the operation of the printer in combination with all the Wireless LAN units is not guaranteed. Especially in the ad-hoc mode, the printer may not operate normally, depending on the combination of the device to connect with. Be sure to carry out evaluation of the operation before use.

Notes on use

- When you initialize or change the printer settings, the printer is reset to reflect the settings. It may take about 1 minute depending on the network settings or environment. Also, your application may indicate power off during the time waiting for reset. In that case, wait for about 1 minute, and then reconnect to the printer.
- Where Wi-Fi communication is in heavy traffic, your application may falsely recognize that the communication is disconnected and indicate power off due to response delay. In that case, disable Power Save to improve the trouble.

Default Password for Setup / Default Passphrase for SimpleAP

The default password and the passphrase are as follows:

Password label	Password / Passphrase
Attached to the product	Printed on the label
Not attached to the product	Serial number (10-digit alphanumeric characters, case-sensitive)

The password label is attached at the location shown below.

The serial number is on the nameplate attached at the location shown below.

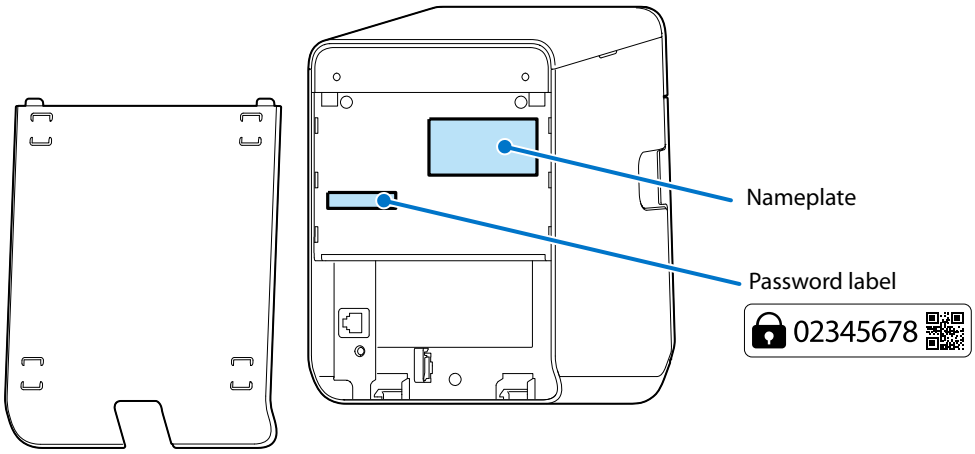

You can also find the serial number on the self-test printed sheet and on the "SimpleAP Start" sheet. On the "SimpleAP Start" sheet, the last 10 digits of the SSID is the serial number.

If the password label is lost, the default password can be checked by printing the status sheet. (A sample status sheet is shown to the right.)

If there is no password on the status sheet, the default password is a serial number.

To improve security, it is recommended to change the administrator password from the default password.

The password can be changed from [Password] in the [Optional] menu of EpsonNet Config (web version). It can also be changed using TM-L100 Utility or Epson TM Utility.

```
*** Wi-Fi & Ethernet Interface ***

Wi-Fi Status
  MAC Address        : Unmounted
  :
  :

Ethernet Status
  MAC Address        : XX-XX-XX-XX-XX-XX
  :
  :

Network
  Soft Version       : XX.XX(XXXX.XX.XX)

TCP/IP Status
  Acquiring          : Auto
  :
  :

Service Status
  Time Server        : (off)
  :
  :

Other Status
  Date/Time          : 20XX/XX/XX XX:XX:XX
  Wi-Fi Device ID    : Unknown
  Wi-Fi Region ID    : 1
  Initial Password   : XXXXXXXX
```

RS-232 Serial Interface (Serial model)

Interface board specifications (RS-232-compliant)

Item		Specifications
Data transfer method		Serial
Synchronization		Asynchronous
Handshake		Can be set using the commands, software settings mode, or TM-L100 Utility. • DTR/DSR control • XON/XOFF control
Signal level	MARK	-3 to -15 V logic “1”/OFF
	SPACE	+3 to +15 V logic “0”/ON
Bit length		Can be set using the commands, software settings mode, or TM-L100 Utility. • 7 bit • 8 bit
Transmission speed		Can be set using the commands, software settings mode, or TM-L100 Utility. 2400, 4800, 9600, 19200, 38400, 57600, 115200 bps [bps: bits per second]
Parity		Can be set using the commands, software settings mode, or TM-L100 Utility. • No parity • Even parity • Odd parity
Stop bit		1 bit or more However, the stop bit for data transfer from the printer is fixed to 1 bit.
Connector	Printer side	D-Sub 9 pin (male) connector

Functions of each connector pin

Pin no.	Signal name	Signal direction	Function
2	RXD	Input	Reception data
3	TXD	Output	Transmission data
4	DTR	Output	When DTR/DSR control is selected, this signal indicates whether the printer is BUSY. • SPACE status Indicates that the printer is ready to receive data. • MARK status Indicates that the printer is BUSY. The conditions under which the printer becomes BUSY can be set using the Epson TM Utility or the TM-L100 Utility. When XON/XOFF control is selected, the signal indicates that the printer is properly connected and ready to receive data from the host. The SPACE status indicates that the printer is connected properly and can receive data from the host. It is always in the SPACE status except in the following cases: • During the period from when power is turned on to when the printer is ready to receive data. • During the self-test.
5	SG	-	Signal ground
6	DSR	Input	This signal indicates whether the host computer can receive data. SPACE indicates that the host computer can receive data. MARK indicates that the host computer cannot receive data. When DTR/DSR control is selected, the printer transmits data after confirming this signal (except if transmitted using some ESC/POS commands). When XON/XOFF control is selected, the printer does not check this signal.
7	RTS	Output	Same as the DTR signal

XON/XOFF

When XON/XOFF control is selected, the printer transmits the XON or XOFF signals as follows.
The timing of the transmission varies depending on the conditions configured as BUSY.

Signal	Printer status	Condition for BUSY	
		Receive buffer full	Receive buffer full / Offline
XON	1) When the printer goes online after turning on the power (or reset using the interface)	Transmit	Transmit
	2) When the receive buffer is released from the buffer full state	Transmit	Transmit
	3) When the printer switches from offline to online	—	Transmit
	4) When the printer recovers from an error using some ESC/POS commands	—	Transmit
XOFF	5) When the receive buffer becomes full	Transmit	Transmit
	6) When the printer switches from online to offline	—	Transmit

Code

The hexadecimal numbers corresponding to the XON/XOFF codes are shown below.

- XON code: 11H
- XOFF code: 13H

Bluetooth Interface (Bluetooth model)

CAUTION

Countries and regions where Bluetooth can be used are limited. Since notes are provided for each country, check the sheet supplied with the product.

Specification

- Bluetooth 3.0 (EDR supported)
- Bluetooth Power Class 2
- Built-in antenna
- Pass key setting is possible
- Device name setting is possible
- The maximum number of devices that can be registered as the pairing information: 8 (Multi-pairing is supported.)
- The number of devices that can be connected at a time: 1 (Multi-point connection is not supported.)

Initial Settings

Setting Contents	Setting Items	Initial Settings
Bluetooth communication settings	Bluetooth passkey	"0000"
	Bluetooth device name	"TM-L100_xxxxxx" (Where xxxxxx is the last six digits in the serial number)
	Bundle Seed ID	"TXAEAV5RN4"
	Enable/Disable auto reconnect to iOS device	"1" (Enable)
	Bluetooth Security	Low
	Bluetooth communication interval during power saving mode	Level 1 (Standard)

Auto Reconnect Feature

The auto reconnect feature allows the printer to automatically restore a connection in the following situations if the Bluetooth connection to the iOS device is lost.

- When the printer is turned on
- When the signal is dropped and then restored

The following shows the printer operations and connection methods when the auto reconnect feature is enabled or disabled.

Auto Reconnect Feature	Enabled	Disabled
Printer operations when Bluetooth is disconnected	Perform the following reconnection sequence. **[Reconnection sequence]** 1. The printer tries to connect to the iOS device to which it was last connected. 2. When step 1 fails, the printer waits for connections from other devices. 3. If connection is not established in step 2, the printer tries again to connect to the iOS device to which it last connected. Steps 1 and 2 are repeated until a connection is established.	Wait for a connection from the Bluetooth device.
Reconnecting to iOS device	Reconnect automatically.	Make settings on the Bluetooth settings screen on the iOS device.
Switch to connection from other device	Method 1: After disabling the Bluetooth feature of the connected iOS device, make connection settings on the Bluetooth device that you want to connect. (When the auto reconnect feature is enabled, it may take some time to connect.)	
	Method 2: After disconnecting from the connected iOS device using applications with the TM Utility or Epson ePOS SDK disconnection feature, make settings on the Bluetooth device you want to connect.	

* In the following situations, even if the feature is enabled, the same operations are performed as when it is disabled.
  - When the last Bluetooth device connected was not an iOS device.
  - When wireless communication settings are initialized from the printer.
  - When the Bluetooth connection is cut from the "Printer Selection" screen of the Epson TM Utility.
  - When the Bluetooth connection is cut using disconnectDevice API for Epson ePOS SDK for iOS.
* We recommend disabling this feature when using the printer from devices that are not running iOS.
* When using a single printer between multiple iOS devices, disable this feature to prevent unintended reconnections via Bluetooth. Otherwise, if you cut the Bluetooth connection using disconnectDevice API on an iOS device that stopped using the printer, the connection will just be restored when the printer is restarted.
* For instruction on how to enable or disable the auto reconnect feature, see "Interface Setup Mode (Interface Setup)" on page 99.

Notes on use

Time required until printing starts

If the host computer and the printer are not connected on a continuous basis but rather connected every time the printer starts printing, some time may be needed for the printer to actually start printing after the host computer commands printing. This pause is the time required for processing the connection between the host computer and the printer.

After opening the port, leave an interval of 300 msec or more before sending data to the port.

Timing to shut the connection off

If a connection between the host computer and the printer is shut off while the printer is offline, it may not be re-established. In this case, first clear the printer offline causes, and then try to re-establish the connection.

Interference from Wi-Fi

2.4 GHz Wi-Fi may interfere with Bluetooth communication. Using the optional Wireless LAN unit with 2.4 GHz may disrupt Bluetooth communication or printing. 5 GHz Wi-Fi is recommended when using Wi-Fi with Bluetooth.

Notes when communicating with Android devices

- The printer cannot connect to Android 2.3 and 2.3.2.
- When communicating with Android 2.3.3 or later versions, communicate through an insecure connection.
- When connecting an Android device to the USB connector (USB-A – Device Charging) for data communication, make sure that the device satisfies the following requirements.
  Requirements: The version of Android OS is 10 or later with kernel version 4.9.15 or later
  However, Epson does not guarantee normal operation of all Android devices even if they satisfy the requirements. Run some tests before actually using the device.

Notes when communicating with iOS devices

Print data deletion and Bluetooth disconnections occur

Situation

Depending on the specifications of the iOS device, print data sent to the printer may be deleted. When this occurs, the Bluetooth connection between the printer and the iOS device is disconnected.

Conditions

This occurs when the printer is not ready to print, and 64 KB or more of print data is sent to the printer.

<Status in which the printer cannot print>

- When the roll paper cover is open
- When the paper is out

Solution

Do not send data to the printer if the printer is not ready to print.

For developers using the SDK from Epson, see the User's Manual - Chapter 3 Programming Guide - "Printing After Checking the Printer Status".

Since Bluetooth is disconnected when this occurs, if the auto reconnect feature is not enabled, you need to reconnect from the Bluetooth settings screen on the iOS device.

When using the SDK from Epson, this connection process is not necessary.

NFC Tag

Transmission standard	ISO14443 A
Frequency	13.56 MHz
Memory	144 byte
Transmission distance	Approximately 10 mm from the NFC installation location.

NOTE

- The transmission distance is an estimate that depends on our experiment conditions and is not a guaranteed value.
- It varies based on the installation environment and target device.

Character Code Tables

See the Character Code Tables for TM Printers that can be accessed from the following URL:

☞ https://support.epson.net/publist/reference_en/

Compatibility with USB Type-A

Devices can be connected to the USB Type-A connector of the TM-L100 (models other than serial model) in the following ways.

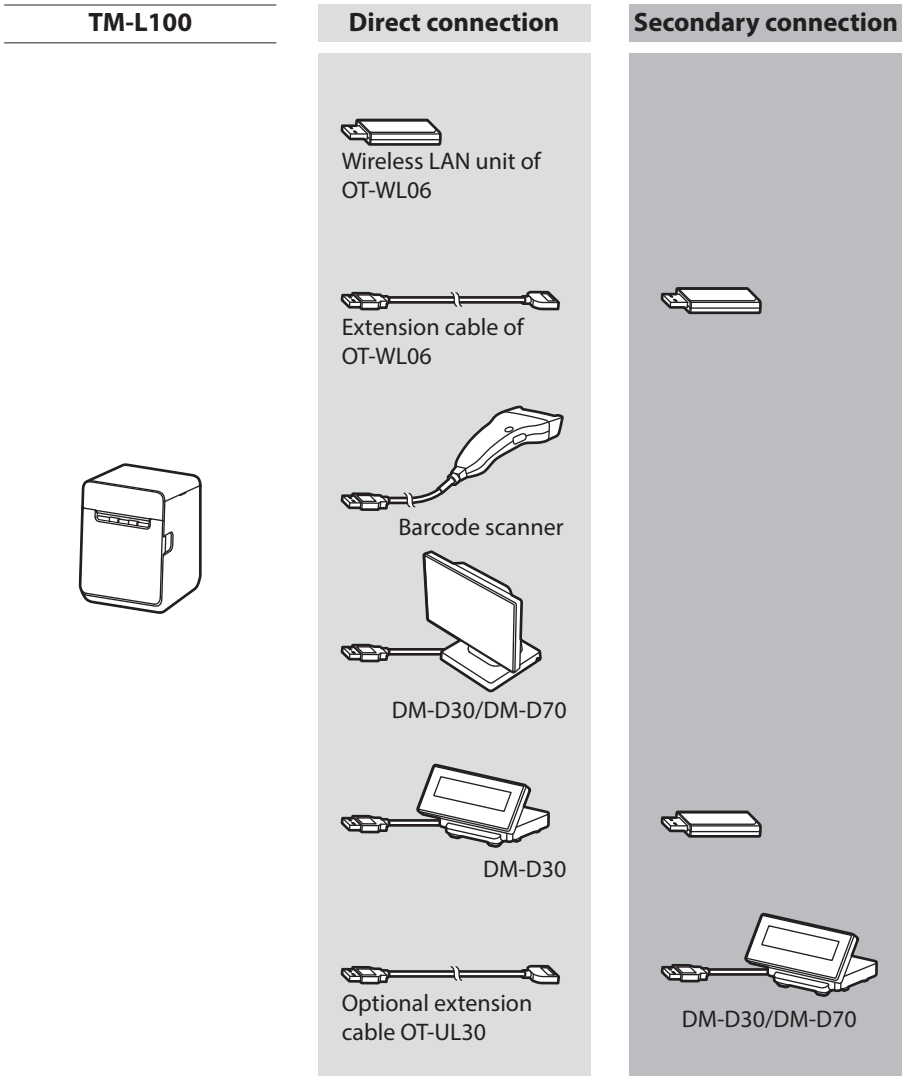

NOTE

- Any USB conversion connectors and USB extension cables other than those above cannot be used.
- Barcode scanners with USB-HID interface or with CDC-ACM interface can be used.
- To use a barcode scanner, set the scanner suffix (delimiter) to CR (carriage return code). Data cannot be obtained using any other settings.