EPSON
EXCEED YOUR VISION

TM-T88V-i

User's Manual

Important Safety Information. . . . . .page 2
Part Names and Functions. . . . . .page 4
Setup. . . . . .page 6
Basic Operations . . . . . page 10
Installing/Replacing the Roll Paper . . . . . page 12
Cleaning. . . . . page 14
Troubleshooting . . . . . page 15
Specifications. . . . . page 17
Appendix. . . . . page 18

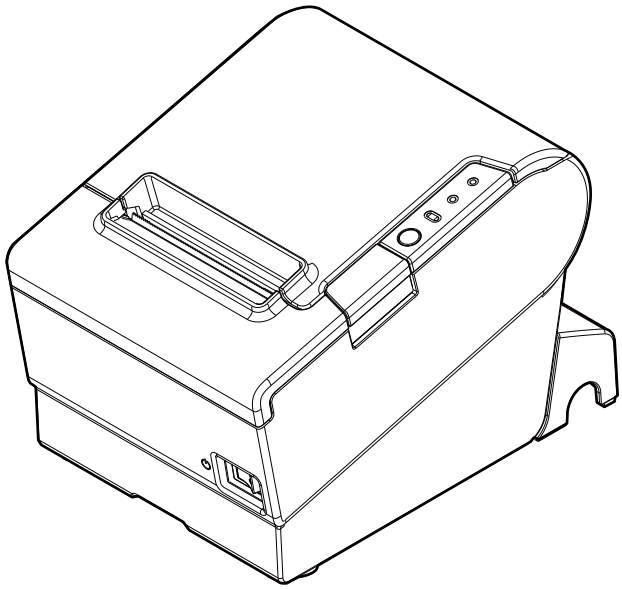

M00076400EN

Important Safety Information

This manual presents important information intended to ensure safe and effective use of this product. Read this manual carefully and store it in an accessible location.

For information on development of a system with this product and setup, see also *Technical Reference Guide*. You can access *Technical Reference Guide* from the included *Manual CD*.

Key to Symbols

The symbols in this manual are identified by their level of importance, as defined below. Read the following carefully before handling the product.

⚠ WARNING:

Warnings must be observed carefully to avoid serious bodily injury.

⚠ CAUTION:

Cautions must be observed to avoid minor injury to yourself, damage to your equipment, or loss of data.

✐ ***Note:***

Notes have important information and useful tips on the operation of your product.

Safety Precautions

⚠ WARNING:

- ❏ ***If this product produces smoke, a strange odor, or unusual noise, immediately unplug the AC cable, and then contact your dealer or an Epson service center for advice. Continued use may lead to fire or electric shock.***
- ❏ ***Do not use this product with any voltage other than the specified one. Doing so may lead to fire or electric shock.***
- ❏ ***Be sure to use the specified power source, Epson AC adapter, RA (Model: M266A). Connection to an improper power source may lead to equipment damage, fire, or electric shock.***
- ❏ ***Do not connect the cables in ways other than those specified in the manuals. Different connections may cause equipment damage or fire.***
- ❏ ***Do not use this product where inflammable fumes of gasoline, benzine, thinner, or other inflammable liquids may be in the air. Doing so may cause an explosion or fire.***
- ❏ ***Do not use aerosol sprayers containing flammable gas inside or around this product. Doing so may cause fire.***
- ❏ ***If water or other liquid spills into this product, immediately unplug the AC cable, and then contact your dealer or an Epson service center for advice. Continued use may lead to fire or shock.***
- ❏ ***Do not allow foreign objects to fall into this product. Penetration by foreign objects may lead to fire or electric shock.***
- ❏ ***Never attempt to repair this product yourself. Improper repair work can be dangerous.***

❏ ***Never disassemble or modify this product. Tampering with this product may result in injury, fire, or electric shock.***

⚠ *CAUTION:*

❏ *Do not use this product in locations subject to high humidity or dust levels. Excessive humidity and dust may cause paper jams and other problems, such as fire, or electric shock.*

❏ *Be sure to set this product on a firm, stable, horizontal surface. The product may break or cause injury if it falls.*

❏ *Do not stand on or place heavy objects on top of this product. Equipment may fall or collapse, causing breakage and possible injury.*

❏ *Take care not to injure your fingers on the manual cutter*

- *when you remove printed paper.*
- *when you perform other operations such as installing/replacing roll paper.*

❏ *The print head can be very hot during and immediately after printing. If you need to touch it, such as for cleaning, wait until it cools down. Touching it before that may cause burns.*

❏ *Do not connect a telephone line to the drawer-kick connector of this product. The telephone line or product may become damaged.*

❏ *To ensure safety, unplug this product before leaving it for an extended period.*

Caution Labels

The caution label on the product indicates the following precautions.

⚠ ♨ *CAUTION:*

Do not touch the thermal head and the frame on its side because they can be very hot after printing.

⚠ *CAUTION:*

When connecting external devices to the USB (including Micro-USB) ports, follow the precautions below.

❏ *Confirm the rated current of the external devices by checking the descriptions on the devices or manuals. Connect the external devices only when those total rated current is less than 2.0 A. Do not use a device whose rated current is unclear.*

❏ *Use UL-approved external devices (only for North American users).*

Part Names and Functions

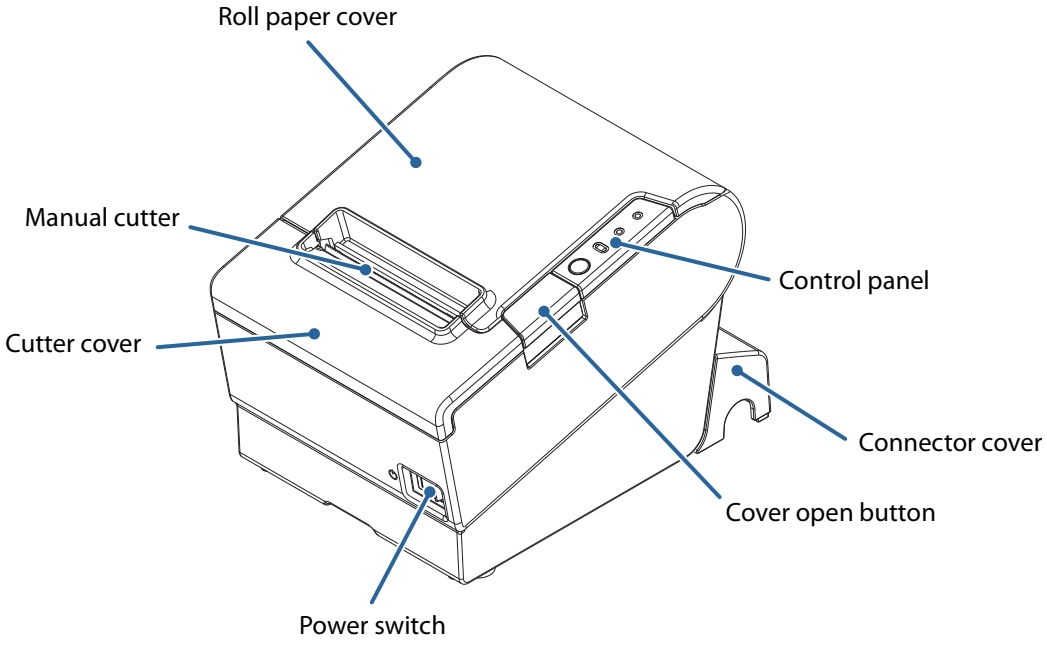

Roll paper cover

Open this cover to install/replace the roll paper.

Manual cutter

Use this cutter when you cut the roll paper manually.

Cutter cover

Open this cover to unlock the autocutter blade when the roll paper cover does not open due to a paper jam. ("Paper is jammed" on page 15)

Power switch

Use this switch to turn on or off the printer.

Cover open button

Use this button to open the roll paper cover.

Connector cover

Use the printer with this cover attached to protect cables. ("Attaching the Connector Cover" on page 8)

Control panel

- ⏻ *(Power) LED:* This LED is on when the printer is on.
- **Error** *LED:* This LED indicates an error. ("Error LED is on" on page 15 or "Error LED is flashing" on page 15)
- **Paper** *LED:* This LED is on when the paper is near end or out. This LED flashes when the printer is in standby.
- **Feed** *button:* This button feeds paper.

Interface

All the ports and connectors are located on the back of the printer.

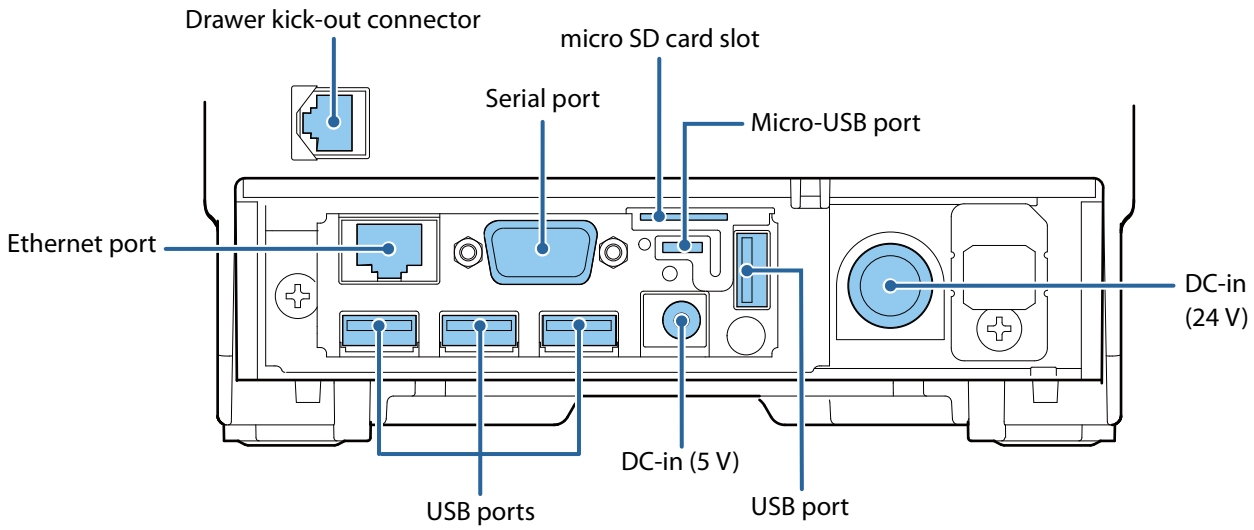

Note:

If the connector cover is attached, detach it to access the ports or connectors. ("Detaching the connector cover" on page 9*)*

Setup

Connecting the AC Adapter

Follow the steps below to connect the AC adapter.

⚠ WARNING:

Be sure to use the specified AC adapter [AC adapter, RA (Model: M266A)]. Connection to an improper power source may lead to equipment damage, fire, or electric shock.

1. Firmly insert the DC connectors of the AC adapter all the way into the 5 V and 24 V DC-in connectors on the printer.
2. Firmly insert the connector of the AC cable all the way into the AC inlet on the AC adapter.
3. Firmly insert the plug all the way into the grounded wall outlet.
4. Set the AC adapter so that its label side is facing down.

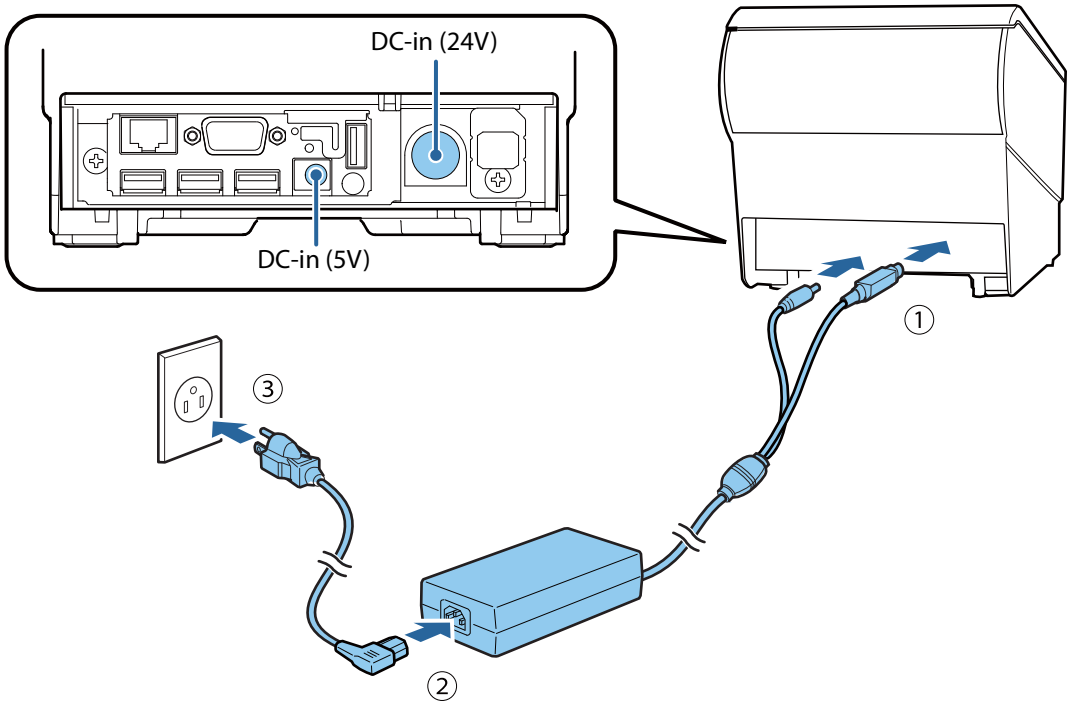

Connecting External Devices

If you connect external devices, connect each cable to the port/connector on the back of the printer. (☞ "Interface" on page 5)

⚠ CAUTION:

❏ *When connecting external devices to the USB (including Micro-USB) ports, follow the precautions below.*

- *Confirm the rated current of the external devices by checking the descriptions on the devices or manuals. Connect the external devices only when those total rated current is less than 2.0 A. Do not use a device whose rated current is unclear.*
- *Use UL-approved external devices (only for North American users).*

❏ *When using the printer, make sure the protective cover fits firmly into place.*

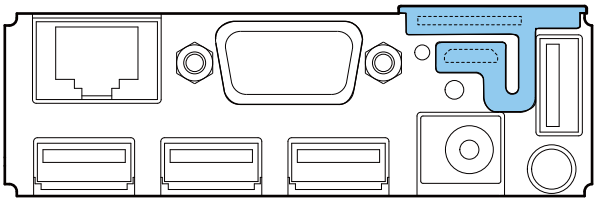

❏ *When Ethernet cables are installed outdoors, make sure devices without proper surge protection are cushioned by being connected through devices that do have surge protection. Otherwise, the devices can be damaged by lightning.*

Note:

Connecting the optional Wireless LAN Cable Set (OT-WL01) to the USB connector enables the wireless LAN connection. While connecting via wireless LAN, keep the Ethernet cable unconnected to the printer.

Attaching the Connector Cover

Follow the steps below to attach the connector cover to protect the cables.

1. Turn over the printer.
2. Position the two hooks on both sides of the connector cover so that they hook the printer case, and then push the connector cover to click onto the printer case.

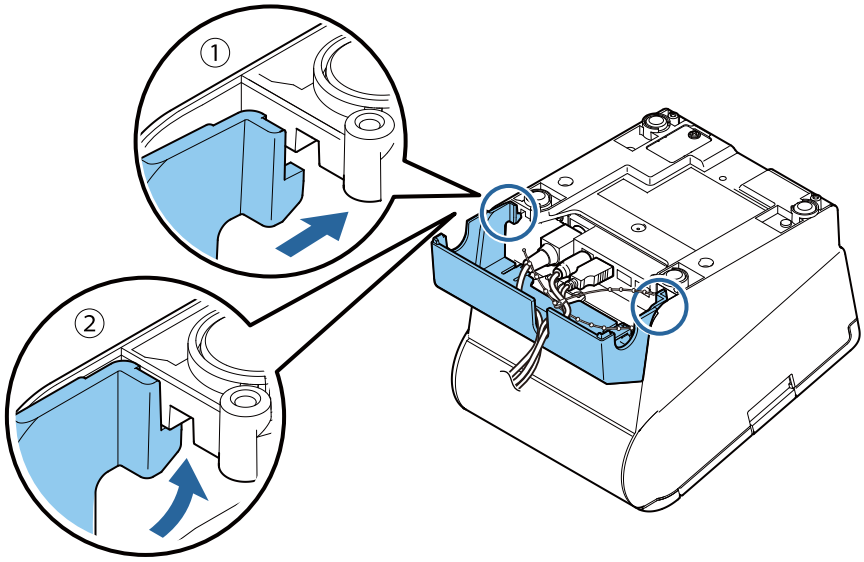

3. Pass each cable through the cable exits of the connector cover. If the cables are too many for one cable exit, use multiple exits.
4. Turn over the printer, and make sure the cables are not pinched.

Note:

When connecting the cables whose connectors do not lock themselves (USB cable and DC 5 V cable), pass the cables through the cable band to prevent them from coming off.

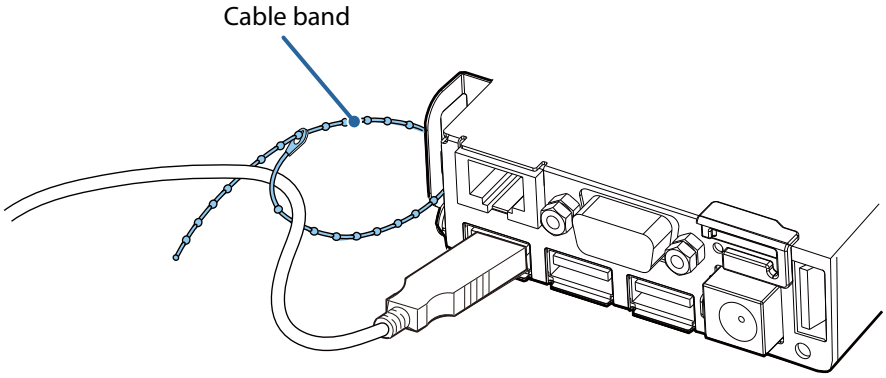

Detaching the connector cover

To remove the connector cover, turn the printer over, and push the connector cover down while pushing the both sides of the connector cover inward to detach the hooks from the printer case.

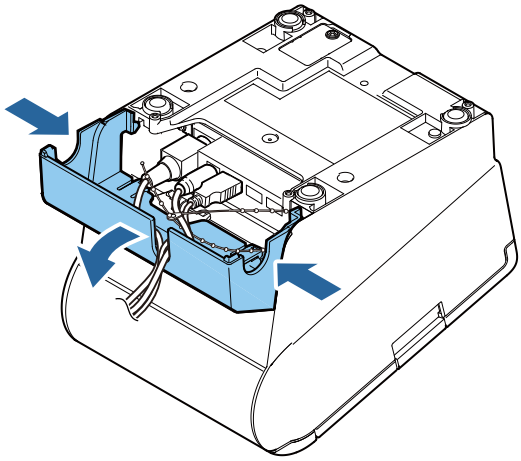

Attaching the Power Switch Cover

Attaching the enclosed power switch cover prevents inadvertent changing of the power switch and tampering. You can turn the power switch on and off by inserting a sharp-pointed object in the holes in the power switch cover.

To detach the cover, also use a sharp-pointed object.

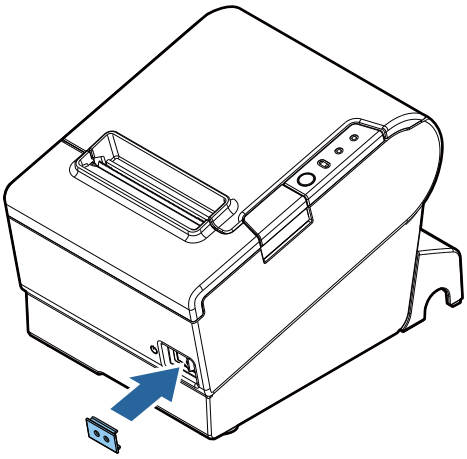

⚠ *WARNING:*

If an accident occurs with the power switch cover attached, unplug the AC cable immediately. Continued use may lead to fire or electric shock.

Basic Operations

Turning Power On/Off

Press the power switch to turn on/off the printer.

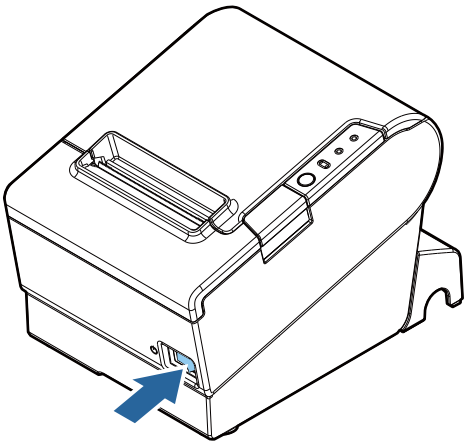

Note:

It takes approximately 30 seconds after the printer is turned on until it is ready for printing.

Opening the Covers

Opening the roll paper cover

Press the cover open button to open the roll paper cover.

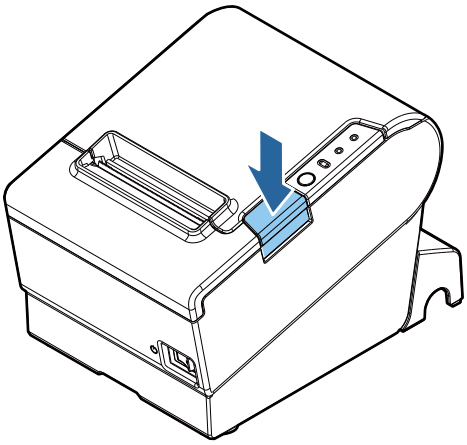

Opening the cutter cover

Slide the cutter cover toward front to open it.

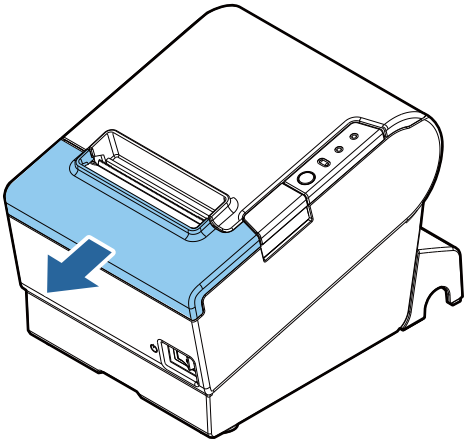

Installing/Replacing the Roll Paper

Follow the steps below to install/replace the roll paper.

⚠ CAUTION:

Be sure to use the specified roll paper. (☞ "Specifications" on page 17)

1. Open the roll paper cover. (☞ "Opening the roll paper cover" on page 10)
2. Remove the used roll paper core, if there is one.
3. Insert the roll paper in the correct direction.

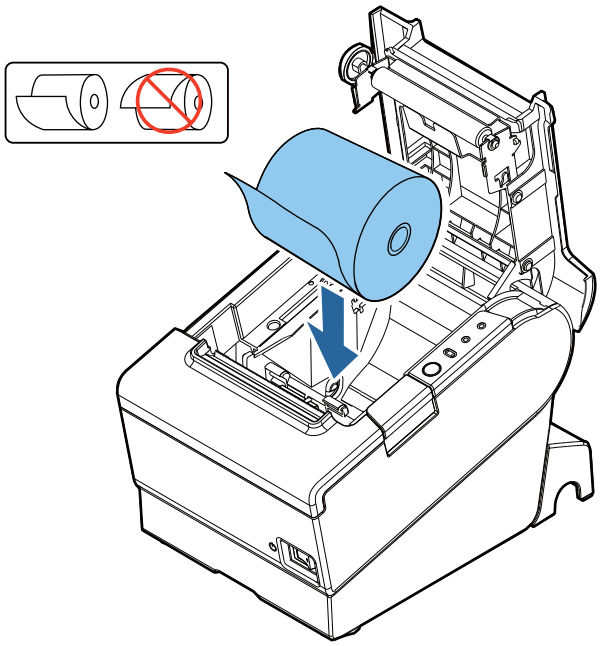

4. Pull out some paper, and close the roll paper cover.

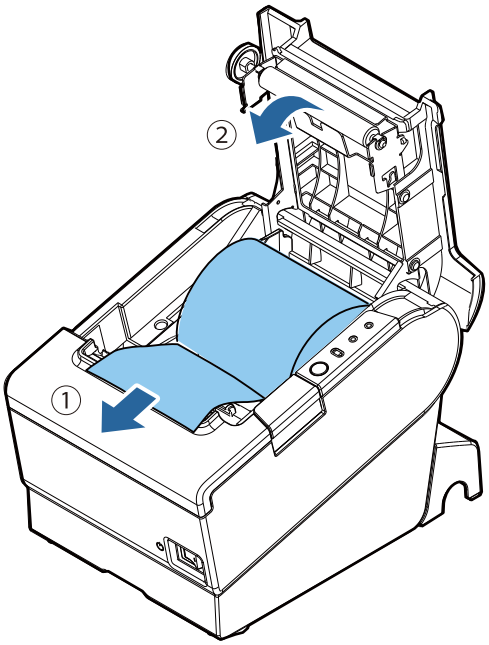

5. Tear off the paper with the manual cutter.

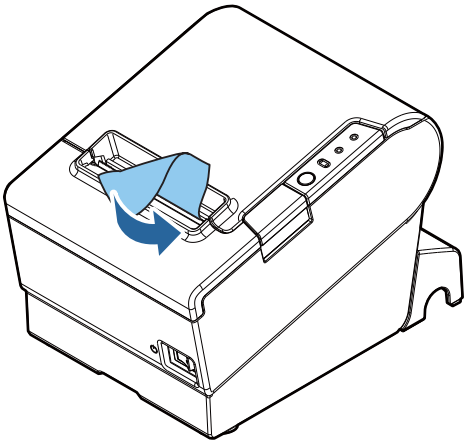

Cleaning

Cleaning the Printer Case

Be sure to turn off the printer, and wipe the dirt off the printer case with a dry cloth or a damp cloth.

CAUTION:

Never clean the printer with alcohol, benzine, thinner, or other such solvents. Doing so may damage or break the parts made of plastic and rubber.

Cleaning the Thermal Head

To maintain print quality, Epson recommends cleaning the thermal head periodically (generally every 3 months) by following the steps below.

CAUTION:

- *The thermal head and the frame on its side can be very hot after printing. Be careful not to touch them and to let them cool before you clean it.*
- *Do not damage the thermal head by touching it with your fingers or any hard object.*

1. Turn off the printer. ("Turning Power On/Off" on page 10)
2. Open the roll paper cover. ("Opening the roll paper cover" on page 10)
3. Clean the thermal elements of the thermal head with a cotton swab moistened with an alcohol solvent (ethanol or IPA).

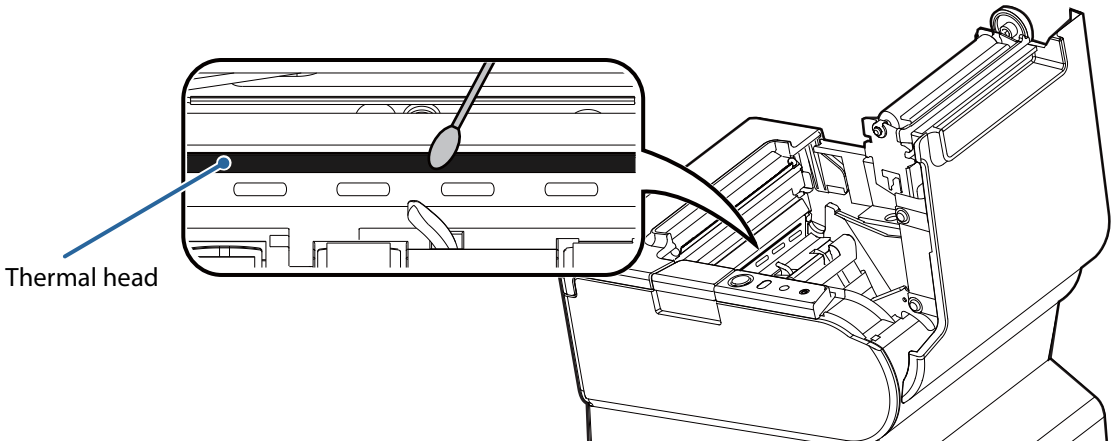

Troubleshooting

⏻(Power) LED does not light

Check whether the AC adapter is correctly connected. (☞ "Connecting the AC Adapter" on page 6)

Error LED is on

- ❏ Check whether the roll paper cover is correctly closed.
- ❏ If the **Paper** LED is on, check whether the roll paper is correctly installed and any roll paper remains. (☞ "Installing/Replacing the Roll Paper" on page 12)

Error LED is flashing

- ❏ Check whether paper is jammed. If it is jammed, remove it. (☞ "Paper is jammed" on page 15)
- ❏ Printing stops if the thermal head overheats and resumes automatically when it cools.
- ❏ For other cases, turn the printer off, and after 10 seconds, turn it back on.

Paper is jammed

CAUTION:

Do not touch the thermal head and the frame on its side because they can be very hot after printing.

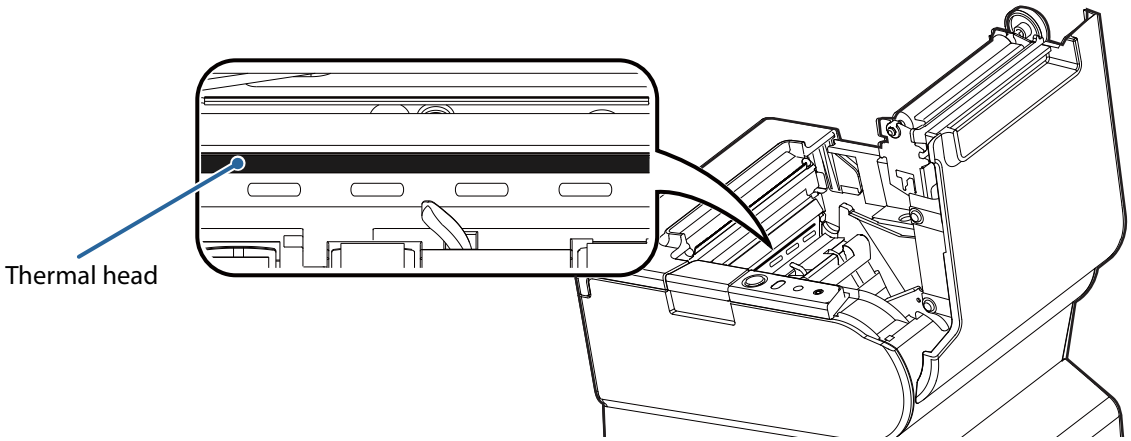

When paper is jammed, never pull out the paper forcibly. Open the roll paper cover (☞ "Opening the roll paper cover" on page 10), and then remove the jammed paper.

The roll paper cover will not open

When the autocutter blade is locked, the roll paper cover will not open. Follow the steps below to return the autocutter blade to the normal position.

1. Turn off the printer. ("Turning Power On/Off" on page 10)
2. Open the cutter cover. ("Opening the cutter cover" on page 11)
3. Turn the knob in the direction of the arrow until you see a triangle in the opening of the frame.

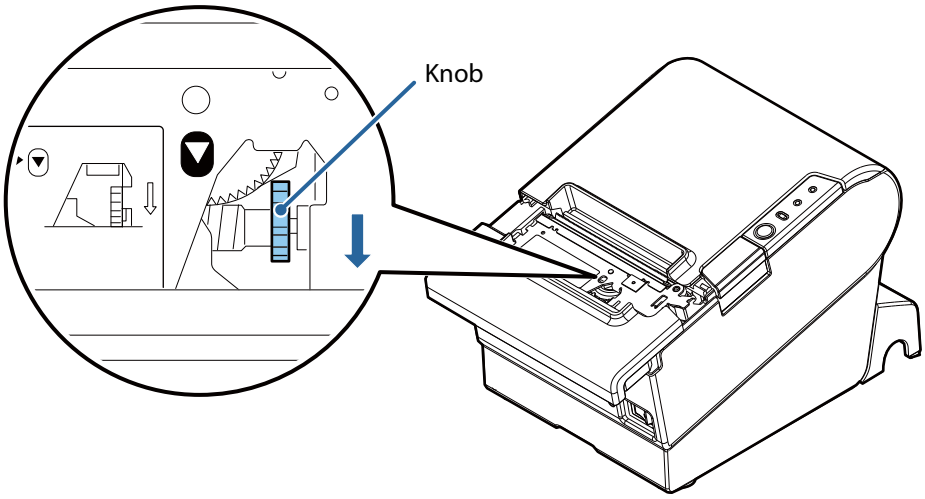

4. Close the cutter cover.
5. Open the roll paper cover. ("Opening the roll paper cover" on page 10)

Specifications

Item		Specification
Printing method		Thermal line printing
Roll paper dimensions	Paper width*1	79.5 mm ± 0.5 mm {3.13" ± 0.02"}
	Diameter	83 mm {3.27"} maximum
	Inside diameter of core	12 mm {0.47"}
	Outside diameter of core	18 mm {0.71"}
Thermal paper type		NTP080-80
Interface	Ethernet	× 1 10BASE-T/100BASE-TX
	Serial	× 1 D-sub 9 pin male
	USB	× 4 USB 2.0, Type A 5 V, 500 mA*2
	Micro-USB	× 1 USB 2.0, Micro-AB 5 V, 500 mA*2
	micro SD card*3	× 1
	Drawer kick-out	× 1
Power supply		Dedicated AC adapter (AC adapter, RA [Model: M266A]) DC 24 V, 1.8 A/DC 5 V, 2.5 A
Dedicated AC adapter		AC adapter, T (Model: M266A) Input: AC 100 V to AC 240 V, 50 Hz to 60 Hz, 1.8 A Output: DC 24 V, 2.1 A/DC 5 V, 3.0 A
AC power consumption	Operating*4	230 V/50 Hz: 38.7 W 115 V/60 Hz: 38.8 W
	Standby	230 V/50 Hz: 2.8 W 115 V/60 Hz: 2.7 W
Temperature	Operating	5 to 45°C {41 to 113°F}
	Storage	–10 to 50°C {14 to 122°F}
Humidity	Operating	10 to 90 %RH
	Storage	10 to 90 %RH
Overall dimensions (including connector cover)		W × D × H: 145 mm × 195 mm × 148 mm {5.71"× 7.68" × 5.83"}
Mass (excluding paper and AC adapter)		Approx. 1.6 kg {3.5 lb}

*1: 58 mm width paper (57.5 ± 0.5 mm) is also available. For information on how to change paper width, see *Technical Reference Guide*.

*2: 500 mA at maximum for one port. 2 A at maximum for total of the 5 ports (USB and Micro-USB ports).

*3: Available when the PHP function is enabled. For information on how to setup PHP environment, see *TM-i Series PHP Setup Manual*. Be sure to use a micro SD card with the wear leveling function.

*4: Based on Epson operating conditions.

Appendix

Downloading Software and Manuals

The latest versions of SDK, utilities, and manuals can be downloaded from one of the following URLs.

For customers in North America, go to the following web site:
http://www.epsonexpert.com/

For customers in other countries, go to the following web site:
http://download.epson-biz.com/?service=pos

Open Source Software License

This product uses open source software in addition to Epson proprietary software.

For information of the open source software used in this product, see the following URL.

http://xxx.xxx.xxx.xxx/licenses/

For "xxx.xxx.xxx.xxx" in the above URL, input your printer's IP address.

Restriction of Use

When this product is used for applications requiring high reliability/safety, such as transportation devices related to aviation, rail, marine, automotive, etc.; disaster prevention devices; various safety devices, etc.; or functional/precision devices, etc.; you should use this product only after giving consideration to including fail-safes and redundancies into your design to maintain safety and total system reliability. Because this product was not intended for use in applications requiring extremely high reliability/safety, such as aerospace equipment, main communication equipment, nuclear power control equipment, or medical equipment related to direct medical care, etc., please make your own judgment on this product's suitability after a full evaluation.

Caution

No part of this publication may be reproduced, stored in a retrieval system, or transmitted in any form or by any means, electronic, mechanical, photocopying, recording, or otherwise, without the prior written permission of Seiko Epson Corporation. No patent liability is assumed with respect to the use of the information contained herein. While every precaution has been taken in the preparation of this book, Seiko Epson Corporation assumes no responsibility for errors or omissions. Neither is any liability assumed for damages resulting from the use of the information contained herein.

Neither Seiko Epson Corporation nor its affiliates shall be liable to the purchaser of this product or third parties for damages, losses, costs, or expenses incurred by purchaser or third parties as a result of: accident, misuse, or abuse of this product or unauthorized modifications, repairs, or alterations to this product, or (excluding the U.S.) failure to strictly comply with Seiko Epson Corporation's operating and maintenance instructions.

Seiko Epson Corporation shall not be liable against any damages or problems arising from the use of any options or any consumable products other than those designated as Original Epson Products or Epson Approved Products by Seiko Epson Corporation.

EPSON is a registered trademark of Seiko Epson Corporation in Japan and other countries/regions.

Other product and company names used herein are for identification purposes only and may be trademarks or registered trademarks of their respective companies. Epson disclaims any and all rights in those marks.

NOTICE: The contents of this manual are subject to change without notice.

© 2014 Seiko Epson Corporation. All rights reserved.