EPSON

ET-8500 Series L8160 Series

User's Guide

Printing

Copying

Scanning

Maintaining the Printer

Solving Problems

NPD6547-05 EN

Contents

Guide to This Manual

Introduction to the Manuals. 6
Searching for Information. 6
Printing Only the Pages You Need. 7
About This Manual. 7
Marks and Symbols. 7
Notes on Screenshots and Illustrations. 8
Operating System References. 8
Trademarks. 9
Copyright. 10

Important Instructions

Safety Instructions. 12
Safety Instructions for Ink. 12
Printer Advisories and Warnings. 13
Advisories and Warnings for Setting Up the Printer. 13
Advisories and Warnings for Using the Printer. . 13
Advisories and Warnings for Using the Touchscreen. 14
Advisories and Warnings for Using the Printer with a Wireless Connection. 14
Advisories and Warnings for Using Memory Cards. 14
Advisories and Warnings for Transporting or Storing the Printer. 14
Notes on the Administrator Password. 15
Default Value of the Administrator Password. . . . 15
Changing the Administrator Password. 15
Operations that Require You to Enter the Administrator Password. 15
Initializing the Administrator Password. 16
Protecting Your Personal Information. 16

Part Names and Functions

Front. 18
Inside. 20
Rear. 21

Guide to the Control Panel

Touch Screen Operations. 24
Home Screen Configuration. 25
Guide to the Network Icon. 26
Menu Screen Configuration. 27
Basic Operations. 27
Entering Characters. 28
Viewing Animations. 29
Displaying a Menu Appropriate to the Operation. . . 30

Loading Paper and CD/DVDs

Loading Paper. 32
Paper Handling Precautions. 32
Notes on Loading Paper. 33
Paper Size and Type Settings. 33
Loading Paper. 35
Loading a CD/DVD. 37
Printable CD/DVDs. 37
CD/DVD Handling Precautions. 37
Loading and Removing a CD/DVD. 38

Placing Originals

Placing Originals. 40

Inserting and Removing a Memory Device

Inserting and Removing a Memory Card. 43
Inserting and Removing an External USB Device. . . 43

Printing

Printing Photos. 46
Printing Photos from a Memory Device. 46
Printing Photos from a Computer. 55
Printing Photos from Smart Devices (iOS). 55
Printing Photos from Smart Devices (Android). . 56
Printing Photos from a Digital Camera. 58
Printing on Envelopes. 60
Printing on Envelopes from a Computer (Windows). 60
Printing on Envelopes from a Computer (Mac OS). 60
Printing Documents. 61
Printing from a Computer - Windows. 61
Printing from a Computer - Mac OS. 78
Printing Documents from Smart Devices (iOS). . 84
Printing Documents from Smart Devices (Android). 85
Printing onto a CD/DVD Label. 87
Printing Photos onto a CD/DVD Label. 87

Printing Photos onto a Jewel Case Jacket. 89
Printing Photos onto a CD/DVD Label Using Epson Photo+. 90
Printing Web Pages. 90
Printing Web Pages from a Computer. 90
Printing Web Pages from Smart Devices. 91
Printing Various Items. 91
Printing Paper with Patterns (Design Paper). . . . 91
Printing Lined Paper. 92
Printing Writing Paper. 93
Printing a Schedule. 94
Printing Original Calendars with a Photo. 94
Printing a Message Card. 95
Printing a Coloring Book Using Photos. 96
Printing Using a Cloud Service. 97
Registering to Epson Connect Service from the Control Panel. 97

Copying

Copying Originals. 100
Menu Options for Copying. 100
Copying on 2-Sides. 102
Copying by Enlarging or Reducing. 103
Copying Multiple Originals onto One Sheet. . . .104
Copying Photos. 105
Menu Options for Paper and Print Settings When Copying Photos. 106
Menu Options for Photo Adjustments When Copying Photos. 107
Copying ID card. 107
Copying Books. 108
Copying Without Margins. 109
Copying on a CD/DVD Label. 110
Menu Options for Copying to a Disc label. 112

Scanning

Basic Information on Scanning. 114
What is a "Scan"?. 114
Scanning Uses. 114
Available Scanning Methods. 114
Recommended File Formats. 116
Recommended Resolutions. 117
Scanning Originals to a Memory Device. 117
Scan Options for Scanning to a Memory Device 118
Advanced Options for Scanning to a Memory Device. 119
Scanning Originals to a Computer. 119
Scanning from the Control Panel. 120
Scanning from a Computer. 121
Scanning Originals to the Cloud. 121
Scan Options for Scanning to the Cloud. 122
Advanced Options for Scanning to the Cloud. . 123
Scanning Originals Using WSD. 123
Setting Up a WSD Port. 123
Scanning Originals to a Smart Device. 125
Advanced Scanning. 125
Scanning Multiple Photos at the Same Time. . . 125

Saving and Sharing Data

Sharing Data on a Memory Device. 128

Maintaining the Printer

Checking the Status of Consumable. 130
Improving Paper Feeding Problems. 130
Improving Print, Copy, and Scan Quality. 133
Checking and Cleaning the Print Head. 133
Running Power Cleaning. 134
Preventing nozzle clogging. 135
Aligning the Print Head. 135
Cleaning the Paper Path for Ink Smears (when the Surface of the Print Result is Smeared Vertically). 136
Cleaning the Paper Path for Ink Smear (when the Back of the Print Result is Dirty). 137
Cleaning the Scanner Glass. 139
Cleaning the Translucent Film. 140
Menu Options for Maintaining the Printer. 143
Cleaning the Printer. 144
Cleaning Spilled ink. 145
Checking the Total Number of Pages Fed Through the Printer. 145
Saving Power. 145
Installing or Uninstalling Applications Separately. 146
Installing the Applications Separately. 146
Adding the Printer (for Mac OS Only). 148
Uninstalling Applications. 148
Updating Applications and Firmware. 150
Transporting and Storing the Printer. 151

Solving Problems

The Printer Does Not Work as Expected. 158
The Printer Does Not Turn On or Off. 158
Paper Does Not Feed Properly. 159
Cannot Print. 162
Cannot Start Scanning. 179

Cannot Operate the Printer as Expected. 189
A Message is Displayed on the LCD Screen. 195
Paper Gets Jammed. 197
Removing Jammed Paper. 198
Preventing Paper Jams. 203
It is Time to Refill the Ink. 204
Ink Bottle Handling Precautions. 204
Refilling the Ink Tanks. 205
It is Time to Replace the Maintenance Box. 209
Maintenance Box Handling Precautions. 209
Replacing a Maintenance Box. 210
Printing, Copying, and Scanning Quality is Poor. . 211
Print Quality is Poor. 211
Copy Quality is Poor. 221
Scanned Image Problems. 228
Cannot Solve Problem. 230
Cannot Solve Printing or Copying Problems. . . 231

Adding or Replacing the Computer or Devices

Connecting to a Printer that has been Connected to the Network. 233
Using a Network Printer from a Second Computer. 233
Using a Network Printer from a Smart Device. . 234
Re-setting the Network Connection. 234
When Replacing the Wireless Router. 234
When Changing the Computer. 235
Changing the Connection Method to the Computer. 235
Making Wi-Fi Settings from the Control Panel. . 236
Connecting a Smart Device and Printer Directly (Wi-Fi Direct). 240
About Wi-Fi Direct. 240
Connecting to Devices using Wi-Fi Direct. 241
Disconnecting Wi-Fi Direct (Simple AP) Connection. 243
Changing the Wi-Fi Direct (Simple AP) Settings Such as the SSID. 243
Checking the Network Connection Status. 244
Checking the Network Connection Status from the Control Panel. 244
Printing a Network Connection Report. 245
Printing a Network Status Sheet. 251

Product Information

Paper Information. 253
Available Paper and Capacities. 253
Unavailable Paper Types. 258
Consumable Products Information. 258
Ink Bottle Codes. 258
Maintenance Box Code. 259
Software Information. 259
Software for Printing. 259
Software for Scanning. 264
Software for Making Settings. 264
Software for Updating. 267
Settings Menu List. 267
Print Counter. 267
Basic Settings. 268
Printer Settings. 269
Network Settings. 270
Web Service Settings. 271
File Sharing Setup. 272
Camera Print Settings. 272
Guide Functions. 272
Customer Research. 273
Firmware Update. 273
Restore Default Settings. 273
Product Specifications. 274
Printer Specifications. 274
Scanner Specifications. 275
Interface Specifications. 275
Network Specifications. 276
Supported Third Party Services. 278
Memory Device Specifications. 279
Supported Data Specifications. 280
Dimensions. 280
Electrical Specifications. 280
Environmental Specifications. 281
System Requirements. 281
Regulatory Information. 282
Standards and Approvals. 282
Restrictions on Copying. 283

Where to Get Help

Technical Support Web Site. 286
Contacting Epson Support. 286
Before Contacting Epson. 286
Help for Users in Europe. 286
Help for Users in Australia. 286
Help for Users in New Zealand. 287

Guide to This Manual

Introduction to the Manuals. 6

Searching for Information. 6

Printing Only the Pages You Need. 7

About This Manual. 7

Trademarks. 9

Copyright. 10

Introduction to the Manuals

The following manuals are supplied with your Epson printer. As well as the manuals, check the various types of help information available from the printer itself or from the Epson software applications.

❏ Important Safety Instructions (paper manual)

Provides you with instructions to ensure the safe use of this printer.

❏ Start Here (paper manual)

Provides you with information on setting up the printer and installing the software.

❏ User's Guide (digital manual)

This manual. This manual is available as PDF and Web manuals. Provides overall information and instructions on using the printer, on network settings when using the printer on a network, and on solving problems.

You can obtain the latest versions of the above manuals with the following methods.

❏ Paper manual

Visit the Epson Europe support website at https://www.epson.eu/support, or the Epson worldwide support website at https://support.epson.net/.

❏ Digital manual

To view the Web manual, visit the following website, enter the product name, and then go to **Support**.

https://epson.sn

Searching for Information

The PDF manual allows you to search for information you are looking for by keyword, or jump directly to specific sections using the bookmarks. This section explains how to use a PDF manual that has been opened in Adobe Acrobat Reader DC on your computer.

Searching by keyword

Click **Edit** > **Advanced Search**. Enter the keyword (text) for information you want to find in the search window, and then click **Search**. Hits are displayed as a list. Click one of the displayed hits to jump to that page.

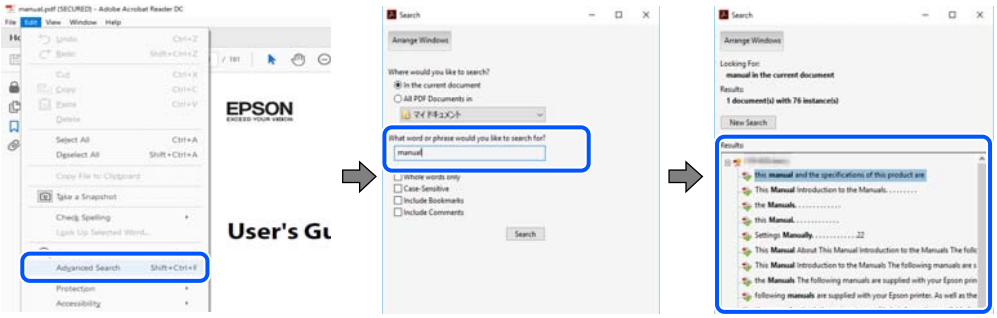

Jumping directly from bookmarks

Click a title to jump to that page. Click + or > to view the lower level titles in that section. To return to the previous page, perform the following operation on your keyboard.

❏ Windows: Hold down **Alt**. and then press ←.

❏ Mac OS: Hold down the command key, and then press ←.

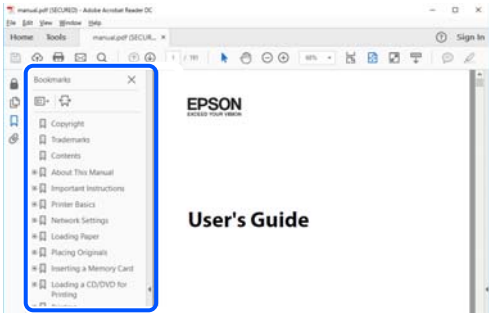

Printing Only the Pages You Need

You can extract and print only the pages you need. Click **Print** in the **File** menu, and then specify the pages you want to print in **Pages** in **Pages to Print**.

❏ To specify a series of pages, enter a hyphen between the start page and the end page.

Example: 20-25

❏ To specify pages that are not in series, divide the pages with commas.

Example: 5, 10, 15

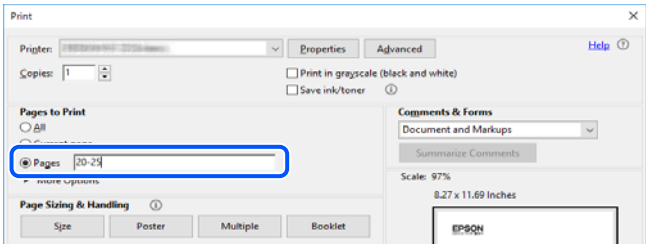

About This Manual

This section explains the meaning of marks and symbols, notes on descriptions, and operating system reference information used in this manual.

Marks and Symbols

Caution:

Instructions that must be followed carefully to avoid bodily injury.

Important:

Instructions that must be observed to avoid damage to your equipment.

Note:

Provides complementary and reference information.

Related Information

➡ Links to related sections.

Notes on Screenshots and Illustrations

- ❏ Screenshots of the printer driver are from Windows 10 or macOS High Sierra. The content displayed on the screens varies depending on the model and situation.
- ❏ Illustrations used in this manual are examples only. Although there may be slight differences depending on the model, the method of operation is the same.
- ❏ Some of the menu items on the LCD screen vary depending on the model and settings.
- ❏ You can read the QR code using dedicated app.

Operating System References

Windows

In this manual, terms such as "Windows 10", "Windows 8.1", "Windows 8", "Windows 7", "Windows Vista", "Windows XP", "Windows Server 2019", "Windows Server 2016", "Windows Server 2012 R2", "Windows Server 2012", "Windows Server 2008 R2", "Windows Server 2008", "Windows Server 2003 R2", and "Windows Server 2003" refer to the following operating systems. Additionally, "Windows" is used to refer to all versions.

- ❏ Microsoft® Windows® 10 operating system
- ❏ Microsoft® Windows® 8.1 operating system
- ❏ Microsoft® Windows® 8 operating system
- ❏ Microsoft® Windows® 7 operating system
- ❏ Microsoft® Windows Vista® operating system
- ❏ Microsoft® Windows® XP operating system
- ❏ Microsoft® Windows® XP Professional x64 Edition operating system
- ❏ Microsoft® Windows Server® 2019 operating system
- ❏ Microsoft® Windows Server® 2016 operating system
- ❏ Microsoft® Windows Server® 2012 R2 operating system
- ❏ Microsoft® Windows Server® 2012 operating system
- ❏ Microsoft® Windows Server® 2008 R2 operating system
- ❏ Microsoft® Windows Server® 2008 operating system
- ❏ Microsoft® Windows Server® 2003 R2 operating system
- ❏ Microsoft® Windows Server® 2003 operating system

Mac OS

In this manual, "Mac OS" is used to refer to Mac OS X v10.6.8 or later.

Trademarks

- Epson Scan 2 software is based in part on the work of the Independent JPEG Group.
- libtiff

  Copyright © 1988-1997 Sam Leffler

  Copyright © 1991-1997 Silicon Graphics, Inc.

  Permission to use, copy, modify, distribute, and sell this software and its documentation for any purpose is hereby granted without fee, provided that (i) the above copyright notices and this permission notice appear in all copies of the software and related documentation, and (ii) the names of Sam Leffler and Silicon Graphics may not be used in any advertising or publicity relating to the software without the specific, prior written permission of Sam Leffler and Silicon Graphics.

  THE SOFTWARE IS PROVIDED "AS-IS" AND WITHOUT WARRANTY OF ANY KIND, EXPRESS, IMPLIED OR OTHERWISE, INCLUDING WITHOUT LIMITATION, ANY WARRANTY OF MERCHANTABILITY OR FITNESS FOR A PARTICULAR PURPOSE.

  IN NO EVENT SHALL SAM LEFFLER OR SILICON GRAPHICS BE LIABLE FOR ANY SPECIAL, INCIDENTAL, INDIRECT OR CONSEQUENTIAL DAMAGES OF ANY KIND, OR ANY DAMAGES WHATSOEVER RESULTING FROM LOSS OF USE, DATA OR PROFITS, WHETHER OR NOT ADVISED OF THE POSSIBILITY OF DAMAGE, AND ON ANY THEORY OF LIABILITY, ARISING OUT OF OR IN CONNECTION WITH THE USE OR PERFORMANCE OF THIS SOFTWARE.
- SDXC Logo is a trademark of SD-3C, LLC.

- PictBridge is a trademark.

- QR Code is a registered trademark of DENSO WAVE INCORPORATED in Japan and other countries.
- Microsoft®, Windows®, Windows Server®, and Windows Vista® are registered trademarks of Microsoft Corporation.
- Apple, Mac, macOS, OS X, Bonjour, ColorSync, Safari, AirPrint, iPad, iPhone, iPod touch, and iTunes are trademarks of Apple Inc., registered in the U.S. and other countries.
- Use of the Works with Apple badge means that an accessory has been designed to work specifically with the technology identified in the badge and has been certified by the developer to meet Apple performance standards.
- Chrome, Google Play, and Android are trademarks of Google LLC.
- Adobe, Acrobat, and Reader are either registered trademarks or trademarks of Adobe in the United States and/or other countries.
- Firefox is a trademark of the Mozilla Foundation in the U.S. and other countries.
- Mopria® and the Mopria® Logo are registered and/or unregistered trademarks and service marks of Mopria Alliance, Inc. in the United States and other countries. Unauthorized use is strictly prohibited.

❏ General Notice: Other product names used herein are for identification purposes only and may be trademarks of their respective owners. Epson disclaims any and all rights in those marks.

Copyright

No part of this publication may be reproduced, stored in a retrieval system, or transmitted in any form or by any means, electronic, mechanical, photocopying, recording, or otherwise, without the prior written permission of Seiko Epson Corporation. No patent liability is assumed with respect to the use of the information contained herein. Neither is any liability assumed for damages resulting from the use of the information herein. The information contained herein is designed only for use with this Epson product. Epson is not responsible for any use of this information as applied to other products.

Neither Seiko Epson Corporation nor its affiliates shall be liable to the purchaser of this product or third parties for damages, losses, costs, or expenses incurred by the purchaser or third parties as a result of accident, misuse, or abuse of this product or unauthorized modifications, repairs, or alterations to this product, or (excluding the U.S.) failure to strictly comply with Seiko Epson Corporation's operating and maintenance instructions.

Seiko Epson Corporation and its affiliates shall not be liable for any damages or problems arising from the use of any options or any consumable products other than those designated as Original Epson Products or Epson Approved Products by Seiko Epson Corporation.

Seiko Epson Corporation shall not be held liable for any damage resulting from electromagnetic interference that occurs from the use of any interface cables other than those designated as Epson Approved Products by Seiko Epson Corporation.

© 2023-2026 Seiko Epson Corporation

The contents of this manual and the specifications of this product are subject to change without notice.

Important Instructions

Safety Instructions. 12

Printer Advisories and Warnings. 13

Notes on the Administrator Password. 15

Protecting Your Personal Information. 16

Safety Instructions

Read and follow these instructions to ensure safe use of this printer. Make sure you keep this manual for future reference. Also, be sure to follow all warnings and instructions marked on the printer.

- ❏ Some of the symbols used on your printer are to ensure safety and proper use of the printer. Visit the following Web site to learn the meaning of the symbols.

  https://support.epson.net/symbols

- ❏ Use only the power cord supplied with the printer and do not use the cord with any other equipment. Use of other cords with this printer or the use of the supplied power cord with other equipment may result in fire or electric shock.
- ❏ Be sure your AC power cord meets the relevant local safety standard.
- ❏ Never disassemble, modify, or attempt to repair the power cord, plug, printer unit, scanner unit, or options by yourself, except as specifically explained in the printer's manuals.
- ❏ Unplug the printer and refer servicing to qualified service personnel under the following conditions:

  The power cord or plug is damaged; liquid has entered the printer; the printer has been dropped or the casing damaged; the printer does not operate normally or exhibits a distinct change in performance. Do not adjust controls that are not covered by the operating instructions.

- ❏ Place the printer near a wall outlet where the plug can be easily unplugged.
- ❏ Do not place or store the printer outdoors, near excessive dirt or dust, water, heat sources, or in locations subject to shocks, vibrations, high temperature or humidity.
- ❏ Take care not to spill liquid on the printer and not to handle the printer with wet hands.
- ❏ Keep the printer at least 22 cm away from cardiac pacemakers. Radio waves from this printer may adversely affect the operation of cardiac pacemakers.
- ❏ If the LCD screen is damaged, contact your dealer. If the liquid crystal solution gets on your hands, wash them thoroughly with soap and water. If the liquid crystal solution gets into your eyes, flush them immediately with water. If discomfort or vision problems remain after a thorough flushing, see a doctor immediately.

Safety Instructions for Ink

- ❏ Be careful not to touch any ink when you handle the ink tanks, ink tank caps, and opened ink bottles or ink bottle caps.
  - ❏ If ink gets on your skin, wash the area thoroughly with soap and water.
  - ❏ If ink gets into your eyes, flush them immediately with water. If discomfort or vision problems continue after a thorough flushing, see a doctor immediately.
  - ❏ If ink gets into your mouth, see a doctor right away.
- ❏ Do not disassemble the maintenance box; otherwise ink may get into your eyes or on your skin.
- ❏ Do not shake an ink bottle too vigorously or subject it to strong impacts as this can cause ink to leak.
- ❏ Keep ink bottles and maintenance box out of the reach of children. Do not allow children to drink from the ink bottles.

Printer Advisories and Warnings

Read and follow these instructions to avoid damaging the printer or your property. Make sure you keep this manual for future reference.

Advisories and Warnings for Setting Up the Printer

- ❏ Do not block or cover the vents and openings in the printer.
- ❏ Use only the type of power source indicated on the printer's label.
- ❏ Avoid using outlets on the same circuit as photocopiers or air control systems that regularly switch on and off.
- ❏ Avoid electrical outlets controlled by wall switches or automatic timers.
- ❏ Keep the entire computer system away from potential sources of electromagnetic interference, such as loudspeakers or the base units of cordless telephones.
- ❏ The power-supply cords should be placed to avoid abrasions, cuts, fraying, crimping, and kinking. Do not place objects on top of the power-supply cords and do not allow the power-supply cords to be stepped on or run over. Be particularly careful to keep all the power-supply cords straight at the ends and the points where they enter and leave the transformer.
- ❏ If you use an extension cord with the printer, make sure that the total ampere rating of the devices plugged into the extension cord does not exceed the cord's ampere rating. Also, make sure that the total ampere rating of all devices plugged into the wall outlet does not exceed the wall outlet's ampere rating.
- ❏ If you plan to use the printer in Germany, the building installation must be protected by a 10 or 16 amp circuit breaker to provide adequate short-circuit protection and over-current protection for the printer.
- ❏ When connecting the printer to a computer or other device with a cable, ensure the correct orientation of the connectors. Each connector has only one correct orientation. Inserting a connector in the wrong orientation may damage both devices connected by the cable.
- ❏ Place the printer on a flat, stable surface that extends beyond the base of the printer in all directions. The printer will not operate properly if it is tilted at an angle.
- ❏ Allow space above the printer so that you can fully raise the document cover.
- ❏ Leave enough space in front of the printer for the paper to be fully ejected.
- ❏ Avoid places subject to rapid changes in temperature and humidity. Also, keep the printer away from direct sunlight, strong light, or heat sources.

Advisories and Warnings for Using the Printer

- ❏ Do not insert objects through the slots in the printer.
- ❏ Do not put your hand inside the printer during printing.
- ❏ Do not touch the white flat cable and ink tubes inside the printer.
- ❏ Do not use aerosol products that contain flammable gases inside or around the printer. Doing so may cause fire.
- ❏ Do not move the print head by hand if not instructed to do so; otherwise, you may damage the printer.
- ❏ Be careful not to trap your fingers when closing the scanner unit.
- ❏ Do not press too hard on the scanner glass when placing the originals.

- ❏ If any of the ink tanks are not filled up to the lower line, refill the ink soon. Prolonged use of the printer when the ink level is below the lower line could damage the printer.
- ❏ Always turn the printer off using the ⏻ button. Do not unplug the printer or turn off the power at the outlet until the ⏻ light stops flashing.
- ❏ If you are not going to use the printer for a long period, be sure to unplug the power cord from the electrical outlet.

Advisories and Warnings for Using the Touchscreen

- ❏ The LCD screen may contain a few small bright or dark spots, and because of its features it may have an uneven brightness. These are normal and do not indicate that it is damaged in any way.
- ❏ Only use a dry, soft cloth for cleaning. Do not use liquid or chemical cleaners.
- ❏ The exterior cover of the touchscreen could break if it receives a heavy impact. Contact your dealer if the panel surface chips or cracks, and do not touch or attempt to remove the broken pieces.
- ❏ Press the touchscreen gently with your finger. Do not press force or operate with your nails.
- ❏ Do not use sharp objects such as ball point pens or sharp pencils to perform operations.
- ❏ Condensation inside the touchscreen due to abrupt changes in temperature or humidity may cause performance to deteriorate.

Advisories and Warnings for Using the Printer with a Wireless Connection

- ❏ Radio waves from this printer may negatively affect the operation of medical electronic equipment, causing it to malfunction. When using this printer inside medical facilities or near medical equipment, follow directions from the authorized personnel representing the medical facilities, and follow all posted warnings and directions on the medical equipment.
- ❏ Radio waves from this printer may negatively affect the operation of automatically controlled devices such as automatic doors or fire alarms, and could lead to accidents due to malfunction. When using this printer near automatically controlled devices, follow all posted warnings and directions on these devices.

Advisories and Warnings for Using Memory Cards

- ❏ Do not remove a memory card or turn off the printer while the memory card light is flashing.
- ❏ The methods for using memory cards vary according to card type. Be sure to refer to the manual packaged with your memory card for details.
- ❏ Use only memory cards compatible with the printer.

Advisories and Warnings for Transporting or Storing the Printer

- ❏ When storing or transporting the printer, avoid tilting it, placing it vertically, or turning it upside down; otherwise ink may leak.
- ❏ Before transporting the printer, make sure that the transportation lock is set to the locked (Transport) position and that the print head is in the home (far right) position.

Notes on the Administrator Password

This printer allows you to set an administrator password to prevent unauthorized access or changes to the device settings and network settings stored in the product when connecting to a network.

Default Value of the Administrator Password

The default value of the administrator password is printed on the label on the product itself, such as the one shown. The position where the label is attached depends on the product, such as the side where the cover is opened, the back, or the bottom.

The following illustration is an example of the label attachment position on the side of the printer where the cover opens.

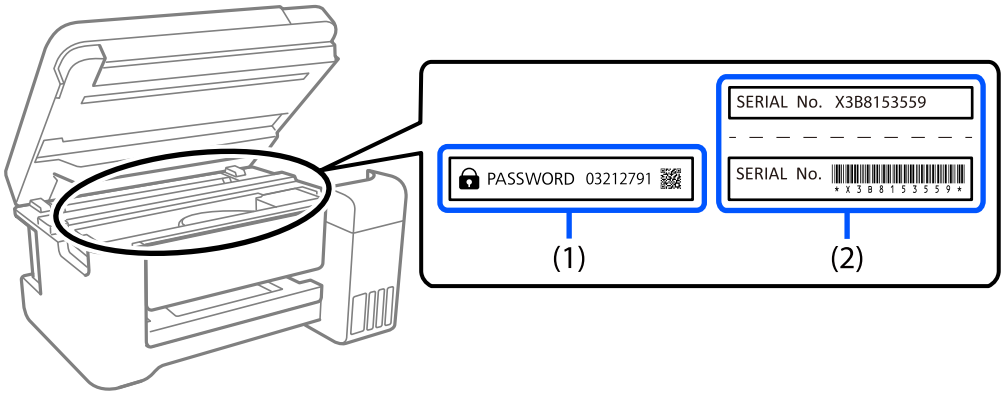

If both labels (1) and (2) are attached, the value next to PASSWORD written on the label in (1) is the default value. In this example, the default value is 03212791.

If only label (2) is attached, the serial number printed on the label in (2) is the default value. In this example, the default value is X3B8153559.

Changing the Administrator Password

For security reasons, we recommend changing the initial password.

It can be changed from Web Config or Epson Device Admin. When changing the password, make sure the new password has at least 8 single-byte alphanumerical characters and symbols.

Related Information

➡ "Running Web Config on a Web Browser" on page 265

Operations that Require You to Enter the Administrator Password

If you are prompted to enter the administrator password when performing the following operations, enter the administrator password set on the printer.

❏ When updating the firmware of the printer from a computer or smart device

❏ When logging on to the advanced settings of Web Config

❏ When adjusting settings using an application that can change the printer's settings.

Initializing the Administrator Password

You can return the administrator password to its default setting by initializing the network settings.

Related Information

➡ "Restore Default Settings" on page 273

Protecting Your Personal Information

When you give the printer to someone else or dispose of it, erase all the personal information stored in the printer's memory by selecting **Settings** > **Restore Default Settings** > **All Settings** on the control panel.

Part Names and Functions

Front. 18

Inside. 20

Rear. 21

Front

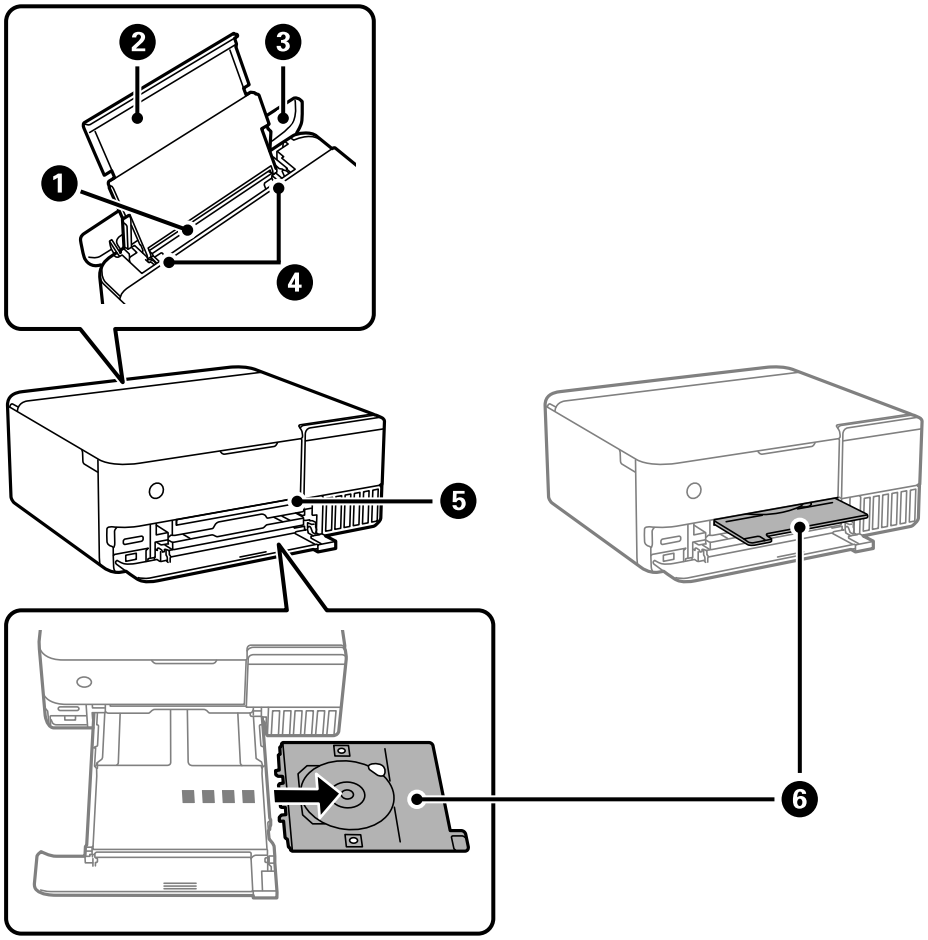

1	Rear paper feeder	Loads paper.
2	Paper support	Supports loaded paper.
3	Feeder guard	Prevents foreign substances from entering the printer. This cover should usually be closed.
4	Edge guide	Feeds the paper straight into the printer. Slide to the edges of the paper.
5	CD/DVD tray slot	Insert the CD/DVD tray with a CD/DVD placed on it for label printing into the top section of the output tray where the light shines.
6	CD/DVD tray	When printing on a CD/DVD, remove this from the bottom of the printer, place a CD/DVD, and insert it into the CD/DVD tray slot. When not printing on a CD/DVD, store it in the bottom of the printer without placing a CD/DVD.

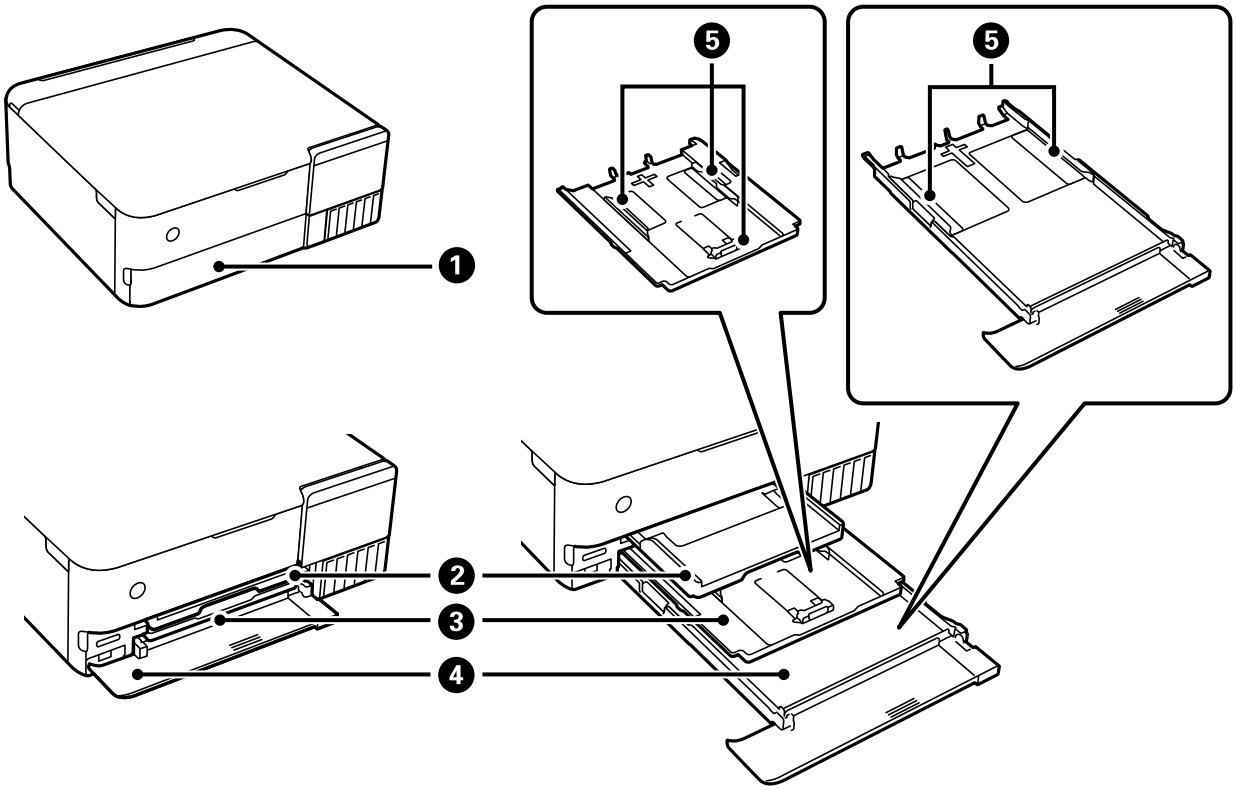

❶	Front cover	Open to load paper in the paper cassette.
❷	Output tray	Holds the ejected paper. When you start printing, this tray is ejected automatically and the light turns on. If you tap **Yes** on the screen displayed when the printer is turned off, it is stored automatically. To store the tray manually,tap Output Tray on the home screen.
❸	Paper cassette 1	Loads paper.
❹	Paper cassette 2	
❺	Edge guide	Feeds the paper straight into the printer. Slide to the edges of the paper.

Inside

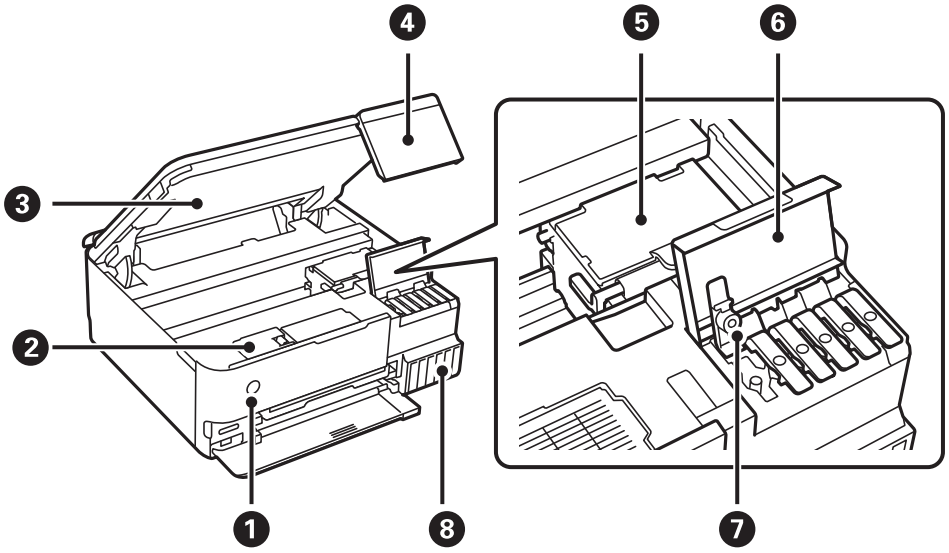

❶	⏻ (Power button/light)	Turns the printer on or off. Unplug the power cord after checking that the power light is off.
❷	Maintenance box cover	Open when replacing the maintenance box. The maintenance box is a container that collects a very small amount of surplus ink during cleaning or printing.
❸	Scanner unit	Scans placed originals. Open to refill the ink tank or to remove jammed paper. This unit should usually be kept closed.
❹	Control panel	Indicates the printer's status and allows you to make print settings. You can change the angle of the control panel.
❺	Print head	Ink is ejected from the print head nozzles underneath.
❻	Ink tank cover	Open to refill the ink tank.
❼	Ink tank cap	Open to refill the ink tank.
❽	Ink tank	Supplies ink to the print head.

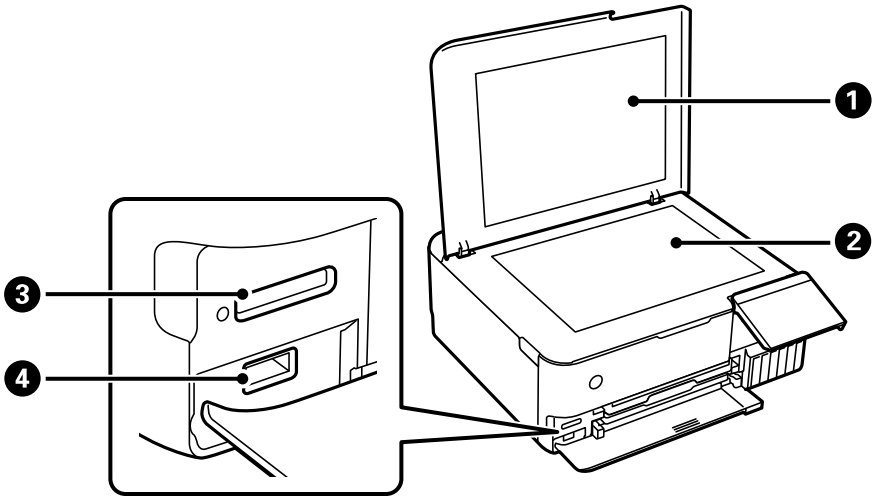

1	Document cover	Blocks external light while scanning.
2	Scanner glass	Place the originals.
3	SD card slot	Insert a memory card.
4	External interface USB port	Connects an external storage device or a PictBridge capable device.

Rear

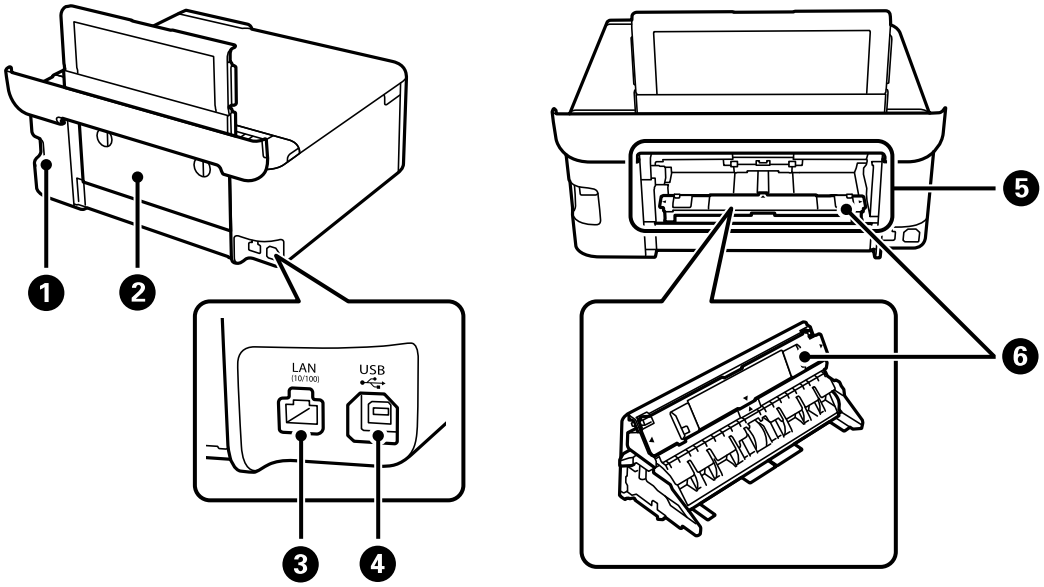

1	AC inlet	Connects the power cord.
2	Rear cover	Remove to load paper in the rear paper feed slot.
3	LAN port	Connects a LAN cable.
4	USB port	Connects a USB cable to connect with a computer.

❺	Rear paper feed slot	Load one sheet of paper at a time by hand. See the related information link below for details on how to attach the paper feed unit to this slot. "Loading Paper" on page 35
❻	Paper feed unit	Remove this unit from rear cover and then attach it to the rear paper feed slot. See the related information link below for details on how to attach this unit. "Loading Paper" on page 35

Guide to the Control Panel

Touch Screen Operations. 24

Home Screen Configuration. 25

Menu Screen Configuration. 27

Basic Operations. 27

Entering Characters. 28

Viewing Animations. 29

Displaying a Menu Appropriate to the Operation. 30

Touch Screen Operations

The touchscreen is compatible with the following operations.

Tap		Press or select the items or the icons.
Flick	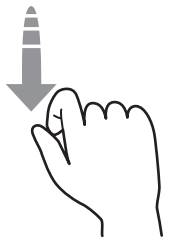	Scroll the screen swiftly.
Slide	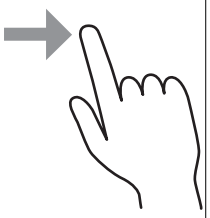	Hold and move the items around.
Pinch in Pinch out	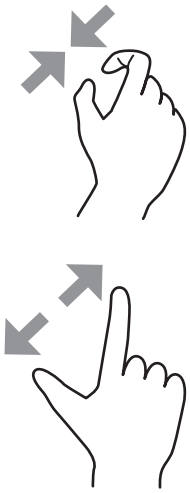	Zoom in or zoom out of the preview image on the control panel when printing photos.

Home Screen Configuration

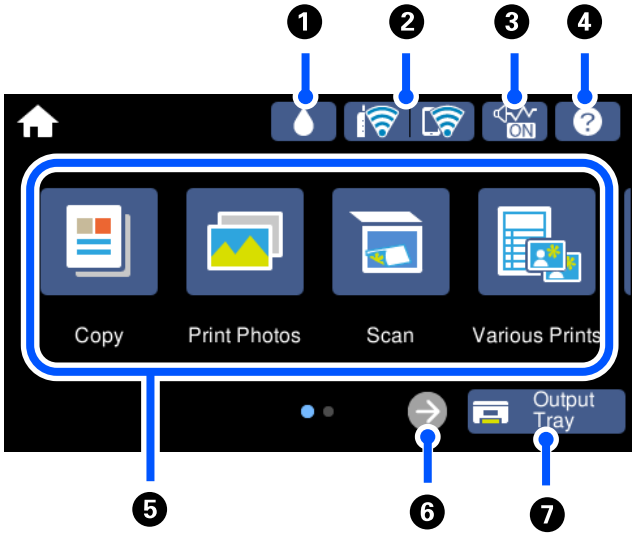

1		You can check the approximate service life of maintenance box.
2		Displays the network connection status. See the following for more details. "Guide to the Network Icon" on page 26
3	ON	Indicates that **Quiet Mode** is set for the printer. When this feature is enabled, the noise made by printer operations is reduced, but print speed may slow down. However, noises may not be reduced depending on the selected paper type and print quality. Tap to change the setting. You can also make this setting from the **Settings** menu. **Settings** > **Printer Settings** > **Quiet Mode**
4	?	Displays the **Help** screen. You can view the operating instructions or the solutions to problems.
5	Displays each menu. ❏ Copy Allows you to copy documents and photos. ❏ Print Photos Allows you to print photos on a memory device such as a memory card or a USB flash drive. ❏ Scan Allows you to scan documents or photos and save them to a memory device or a computer. ❏ Various Prints Allows you to make various copies and to print design paper or a wide variety of original items. ❏ Settings Allows you to make settings related to maintenance, printer settings, and operations. ❏ Maintenance Displays the menus recommended to improve the quality of your printouts such as unclogging nozzles by printing a nozzle check pattern and performing head cleaning, and improving blurring or banding in your printouts by aligning the print head. ❏ Smartphone connect Displays the menu to connect the printer to your smart device or tablet.	

❻		Scrolls the screen to the right.
❼	Output Tray	Stores the output tray.

Guide to the Network Icon

	The printer is not connected to a wired (Ethernet) network or unset it.
	The printer is connected to a wired (Ethernet) network.
	The printer is searching for SSID, unset IP address, or having a problem with a wireless (Wi-Fi) network.
	The printer is connected to a wireless (Wi-Fi) network. The number of bars indicates the signal strength of the connection. The more bars there are, the stronger the connection.
	The printer is not connected to a wireless (Wi-Fi) network in Wi-Fi Direct (Simple AP) mode.
	The printer is connected to a wireless (Wi-Fi) network in Wi-Fi Direct (Simple AP) mode.

Select the icon to display the **Network Connection Settings** screen.

❏ When the printer is not connected to the network yet.

Select the icon of the method you want to use to connect, and then tap **Start Setup** on the next screen to display the setting menu.

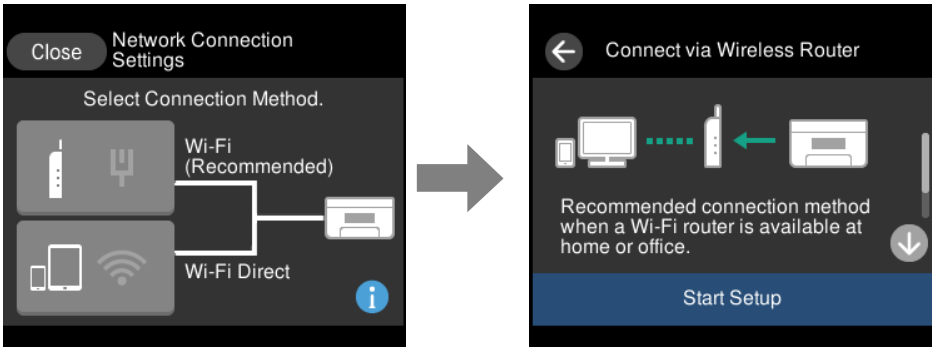

❏ When the printer is connected to the network already.

Displays the information of the network settings such as the printer's IP address.

You can also make this setting from the **Settings** menu.

Settings > **Network Settings** > **Wi-Fi Setup**

Menu Screen Configuration

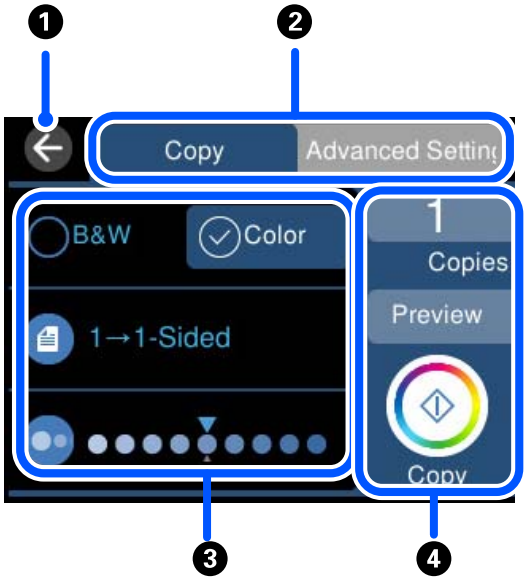

1	Returns to the previous screen.	
2	Switches the list of settings using the tabs. The tab on the left displays frequently used items. The **Advanced Settings** tab displays other items that you can set as necessary.	
3	Displays the list of setting items. Make settings by selecting the item or adding a check mark. Grayed out items are not available. Select the item to check why it is unavailable.	
4	Starts operations using the current settings. Items vary depending on the menu.	
	Copies	Displays the on-screen keypad allowing you to enter the number of copies.
	Preview	Displays a preview of the image before printing, copying, or scanning.
	◇	Starts printing, copying, or scanning.

Basic Operations

Tap anywhere on the setting item to switch it on and off.

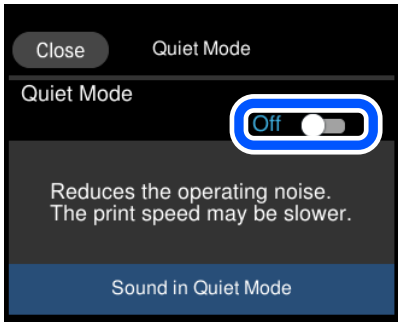

Tap the input field to enter the value, name and so on.

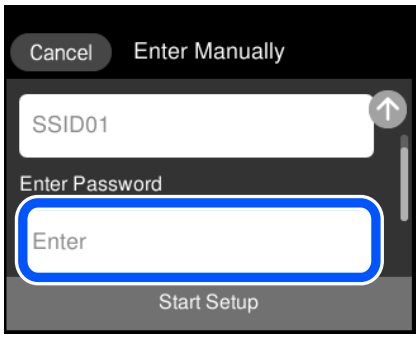

Entering Characters

You can enter characters and symbols by using on-screen keyboard when you make network settings and so on.

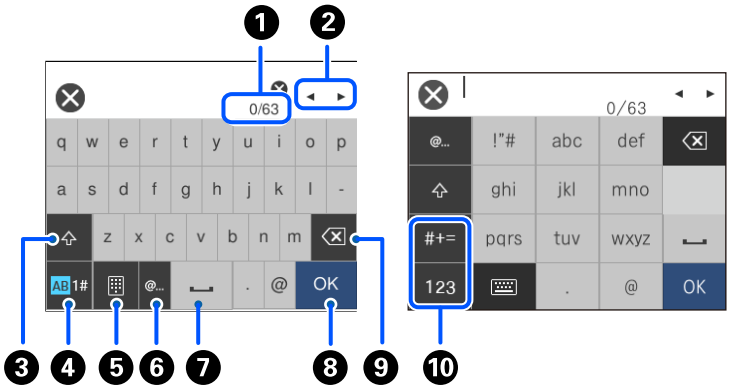

❶	Indicates the character count.
❷	Moves the cursor to the input position.
❸	Switches between upper case and lower case.
❹	Switches the character type. AB: Alphabet 1#: Numbers and symbols
❺	Changes the keyboard layout.
❻	Enters frequently used email domain addresses or URLs by simply selecting the item.
❼	Enters a space.
❽	Enters character.
❾	Deletes a character to the left. Deletes a character to the right when the cursor is at the start of the line and there are no characters to the left.

⑩	Switches the character type. abc: Alphabet 123: Numbers #+=: Symbols

Viewing Animations

You can view animations of operating instructions such as loading paper or removing jammed paper on the LCD screen.

- Tap ⓘ: Displays the help screen. Tap **How To** and select the items that you want to view.
- Select **How To** at the bottom of the operation screen: Displays the context-sensitive animation. Note that the animation depends on the printer model.

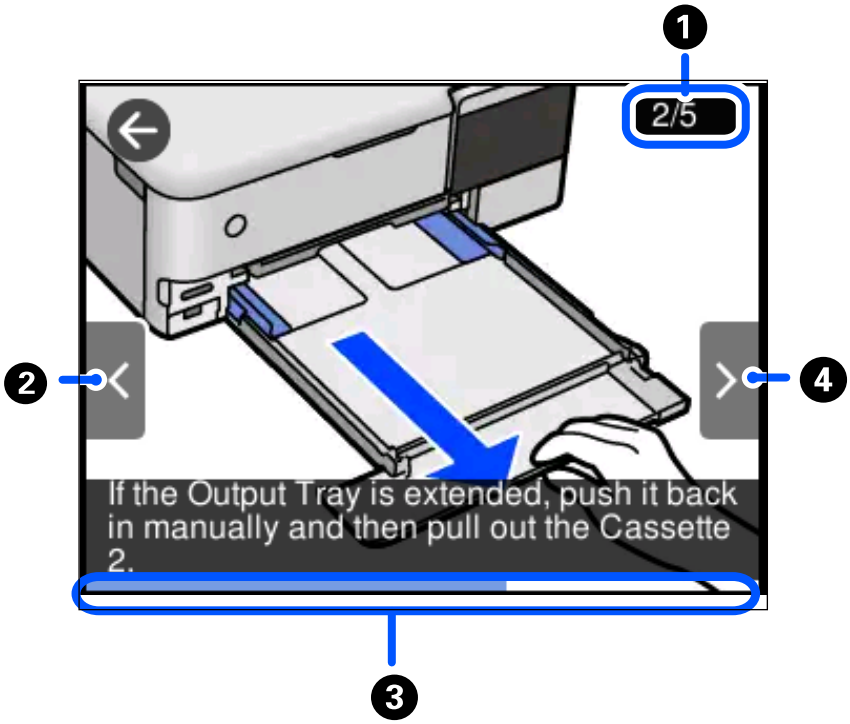

❶	Indicates the total number of steps and the current step number. In the example above, it shows step 2 from 5 steps.
❷	Returns to the previous step.
❸	Indicates your progress through the current step. The animation repeats when the progress bar reaches the end.
❹	Moves to next step.

Displaying a Menu Appropriate to the Operation

The printer automatically displays menus appropriate to your operation. If you want to stop the feature, disable the **Auto Selection Mode** setting.

Settings > **Guide Functions** > **Auto Selection Mode**

❏ Insert an external memory device such as a memory card or a USB device.

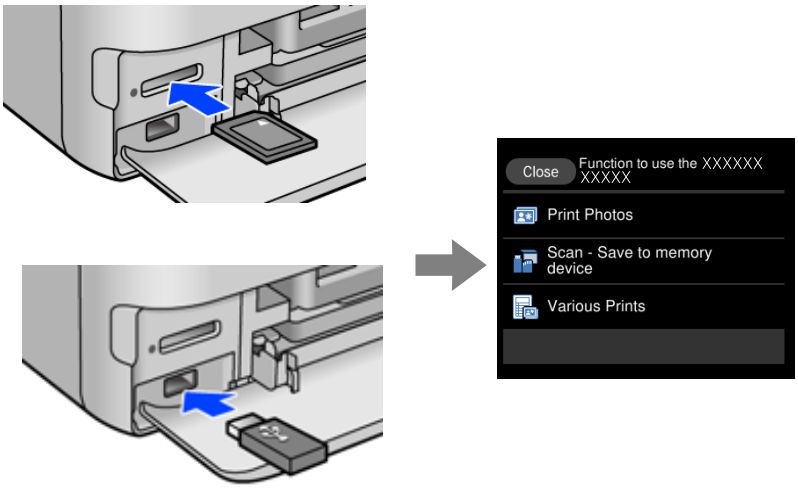

Loading Paper and CD/DVDs

Loading Paper. 32

Loading a CD/DVD. 37

Loading Paper

Paper Handling Precautions

❏ Read the instruction sheets supplied with the paper.

❏ Fan and align the edges of the paper before loading. Do not fan or curl photo paper. Doing so may damage the printable side.

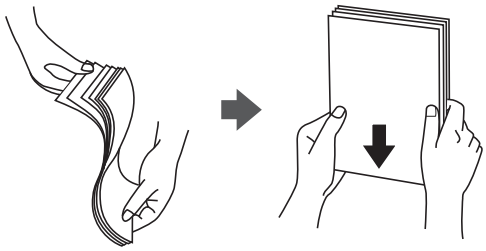

❏ If the paper is curled, flatten it or curl it slightly in the opposite direction before loading. Printing on curled paper may cause paper jams and smears on the printout.

❏ Paper feed problems may occur frequently for manual 2-sided printing when printing on one side of pre-printed paper. Reduce the number of sheets to half or less, or load one sheet of paper at a time if paper jams continue.

❏ Fan and align the edges of the envelopes before loading. When the stacked envelopes are puffed up with air, press them down to flatten them before loading.

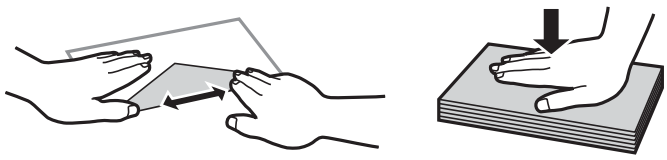

Related Information

➡ "Unavailable Paper Types" on page 258

Notes on Loading Paper

This printer has four paper sources. Load paper of the appropriate size and type to suit your printing needs.

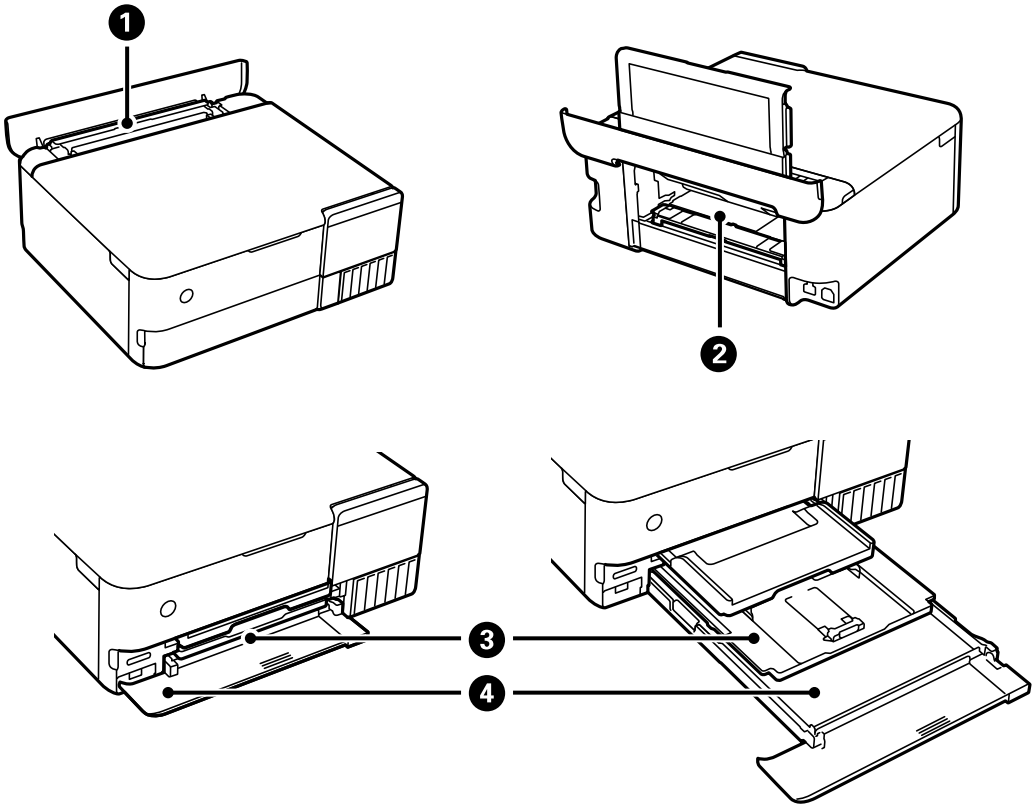

❶	Rear Paper Feeder	❑ You can load commercially available thin paper that cannot be loaded in paper cassette 1 or paper cassette 2, or pre-punched paper such as loose leaf paper. However, it may not be fed depending on the hardness and transparency of the paper.
❷	Rear paper feed slot	❑ You can load thick paper such as poster board (up to 1.3 mm thick). ❑ Install the paper feed unit before loading paper. ❑ Load paper when a message is displayed on the control panel telling you to load paper.
❸	Paper cassette 1	❑ You can load multiple sheets of small size photo paper. ❑ If you load the same paper in paper cassette 1 and paper cassette 2 and select **Cassette 1→2** as the paper source, the printer automatically feeds paper from paper cassette 2 when paper runs out in paper cassette 1.
❹	Paper cassette 2	We recommend loading A4 size plain paper as this is used frequently.

Paper Size and Type Settings

If you register the paper size and type on the screen displayed when you insert the paper cassette, the printer informs you when the registered information and print settings differ. This prevents you from wasting paper and

ink by making sure you are not printing on the wrong paper size or printing in the wrong color due to using settings that do not match the paper type.

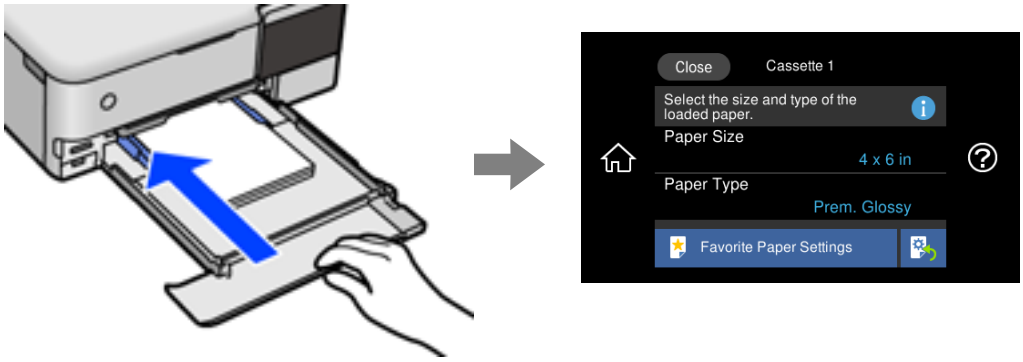

If displayed paper size and type differ from the loaded paper, select the item to change. If the settings match the loaded paper, close the screen.

Note:

- *You can make settings easily by registering frequently used combinations of paper size and type as a favorite. You can make paper settings just by selecting the registered preset. To register a preset, select* ***Favorite Paper Settings****, select > on the next screen and then specify the paper size and paper type.*
- *The paper setting screen is not displayed if you have disabled* ***Paper Configuration*** *in the following menus. In this situation, you cannot print from an iPhone, iPad, or iPod touch using AirPrint.*

  Settings *>* ***Printer Settings*** *>* ***Paper Source Setting*** *>* ***Paper Configuration***

List of Paper Type

To obtain optimum printing results, select the paper type that suits the paper.

Media Name	Media Type	
	Control Panel	Printer Driver, Smart device*
Epson Business Paper	Plain paper	Plain paper
Epson Bright White Ink Jet Paper	Plain paper	Plain paper
Epson Ultra Glossy Photo Paper	Ultra Glossy	Epson Ultra Glossy
Epson Premium Glossy Photo Paper	Prem. Glossy	Epson Premium Glossy
Epson Premium Semigloss Photo Paper	Prem. Semigloss	Epson Premium Semigloss
Epson Photo Paper Glossy	Glossy	Photo Paper Glossy
Epson Matte Paper-Heavyweight Epson Double-Sided Matte Paper	Matte	Epson Matte
Epson Photo Quality Ink Jet Paper Epson Double-sided Photo Quality Ink Jet Paper	Photo Quality Ink Jet	Epson Photo Quality Ink Jet
Epson Photo Stickers	Photo Stickers	Epson Photo Stickers
Epson Iron-On Cool Peel Transfer Paper	Plain paper	Plain paper

Media Name	Media Type	
	Control Panel	Printer Driver, Smart device*
Plain paper	Plain paper	Plain paper
Thin paper	Thin paper	Thin paper
Thick paper (0.61 to 0.80mm)	Thick paper1	Thick-Paper1
Thick paper (0.81 to 1.30mm)	Thick paper2	Thick-Paper2
Envelope	Envelope	Envelope

* For smart devices, these media types can be selected when printing using Epson iPrint.

Loading Paper

See the animations displayed on the printer's LCD screen to load paper, envelopes, or thick photo paper.

Select ?, and then select **How To** > **Load paper**. Select the paper type and paper source you want to use to display the animations. Select **Finish** to close the animation screen.

Loading Pre-punched Paper

Load paper at the center of the rear paper feeder with the printable side facing up.

Load a single sheet of defined size plain paper with binding holes at the left or right. Adjust the print position of your file to avoid printing over the holes.

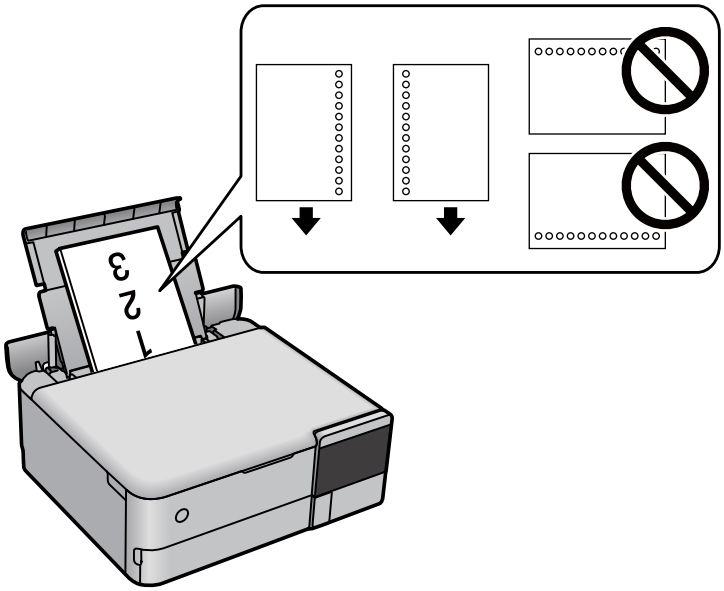

Loading Photo Stickers

Follow the instructions supplied with the stickers to load one sheet of Epson Photo Stickers. Do not load the loading support sheets into this product.

❏ Paper cassette 1 or Paper cassette 2

With the printable side facing down, load a sticker until it touches the back of the paper cassette 1 or paper cassette 2.

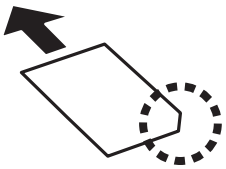

❏ Rear paper feeder

Load a sticker at the center of the the rear paper feeder with the printable side facing up.

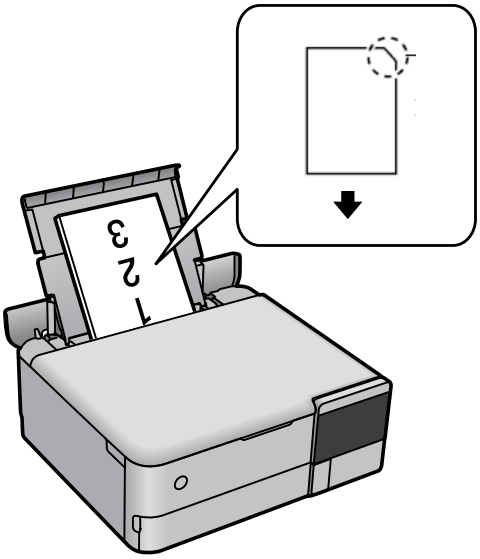

Loading a CD/DVD

Printable CD/DVDs

You can print on a circular 12-cm CD/DVD labelled as suitable for printing, for example "printable on the label surface" or "printable with ink jet printers."

You can also print on Blu-ray Discs™.

CD/DVD Handling Precautions

❏ See the documentation provided with your CD/DVD for more information on handling the CD/DVD or writing data.

❏ Do not print on the CD/DVD before writing your data to it. If you do, fingerprints, dirt, or scratches on the surface may cause errors while writing data.

❏ Depending on the CD/DVD type or printing data, smearing may occur. Try making a test print on a spare CD/DVD. Check the printed surface after waiting for one full day.

❏ Compared to printing on genuine Epson paper, the print density is lowered to prevent ink from smearing on the CD/DVD. Adjust the print density as necessary.

❏ Allow the printed CD/DVDs at least 24 hours to dry avoiding direct sunlight. Do not stack or insert the CD/DVDs into your device until they are completely dry.

❏ If the printed surface is sticky even after it has dried, lower the print density.

❏ Reprinting on the same CD/DVD may not improve the print quality.

❏ If the disc tray or the internal transparent compartment are accidentally printed on, immediately wipe off the ink.

- ❏ Depending on the print area setting, the CD/DVD or disc tray may get dirty. Make settings to print on the printable area.
- ❏ You can set the print range for the CD/DVD to a minimum of 18 mm for the inner diameter, and a maximum of 120 mm for the outer diameter. Depending on the settings, the CD/DVD or disc tray may be smeared. Set within the print range for the CD/DVD you want to print.

Loading and Removing a CD/DVD

When printing on or copying a CD/DVD, instructions are displayed on the control panel informing you when to load the CD/DVD. Follow the on-screen instructions.

Placing Originals

Placing Originals. 40

Placing Originals

Place originals on the scanner glass.

Follow the steps below to view the video for placing originals.

Select ⓘ, and then select **How To** > **Place Originals**. Select **Finish** to close the animation screen.

Using the scanner glass

> ⚠ ***Caution:***
>
> *Be careful not to trap your fingers when closing the document cover. Otherwise you may be injured.*

> **Important:**
>
> ❏ *When placing bulky originals such as books, prevent exterior light from shining directly onto the scanner glass.*
>
> ❏ *Do not apply too much force to the scanner glass or the document cover. Otherwise, they may be damaged.*
>
> ❏ *Do not add originals while scanning.*

Note:

❏ *If there is any trash or dirt on the scanner glass, the scanning range may expand to include it, so the image of the original may be displaced or reduced. Remove any trash and dirt on the scanner glass before scanning.*

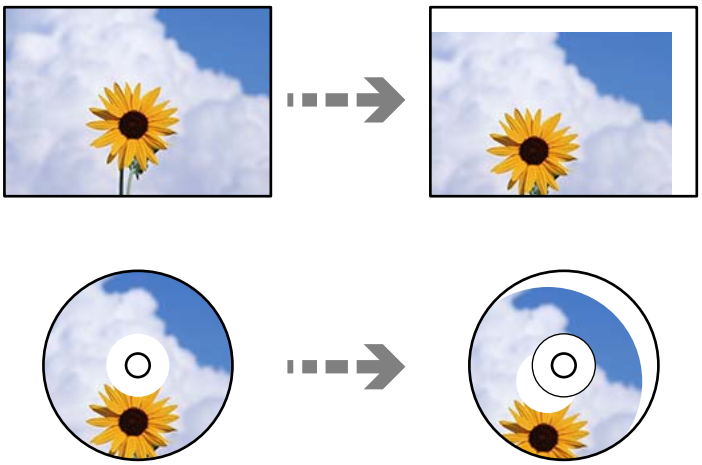

❏ *If you leave the originals on the scanner glass for a long time, they may stick to the surface of the glass.*

Related Information

➡ “Scanner Specifications” on page 275

Inserting and Removing a Memory Device

Inserting and Removing a Memory Card. 43

Inserting and Removing an External USB Device. 43

Inserting and Removing a Memory Card

You can insert a memory card into the printer by referring to the animations displayed on the printer's LCD screen.

Select ?, and then select **How To** > **Insert Memory Card**.

Perform the steps in reverse order to remove the memory card.

> ***Important:***
> *If you remove the memory card while the light is flashing, the data in the memory card may be lost.*

Note:
If you access the memory card from a computer, you need to operate the computer to safely remove the removable device.

Related Information

➡ "Memory Device Specifications" on page 279

Inserting and Removing an External USB Device

You can insert an external USB device into the external interface USB port by referring to the animations displayed on the printer's LCD screen.

Select ?, and then select **How To** > **USB device connection**.

Perform the steps in reverse order to remove the external USB device.

Important:

If you remove the external USB device while operating the printer, the data on the external USB device may be lost.

Related Information

➡ "Memory Device Specifications" on page 279

Printing

Printing Photos. 46

Printing on Envelopes. 60

Printing Documents. 61

Printing onto a CD/DVD Label. 87

Printing Web Pages. 90

Printing Various Items. 91

Printing Using a Cloud Service. 97

Printing Photos

Printing Photos from a Memory Device

You can print data from a memory device such as a memory card or external USB device.

Related Information

➡ "Memory Device Specifications" on page 279

Printing Selected Photos

1. Load paper in the printer.

   "Loading Paper" on page 35

2. Insert a memory device into the SD card slot or the external interface USB port of the printer.

   "Inserting and Removing a Memory Card" on page 43

   "Inserting and Removing an External USB Device" on page 43

   If **Auto Selection Mode** in **Guide Functions** is turned on, a message is displayed. Check the message and select **to function index**.

3. Select **Print Photos** on the control panel.

4. Select **Print**.

5. When a message telling you that loading photos is complete is displayed, select **OK**.

6. Select a photo you want to print from the screen displaying a thumbnail view.

   The selected photo has a check mark and the number of prints (1 initially) on it.

Note:

- *Select Menu at the top right of the screen to display the **Select Photo Menu**. If you specify a date by using **Browse**, only photos of the specified date are displayed.*

  "Menu Options for Selecting Photos" on page 52

- *To change the number of prints, Select **Single View**, and then use - or +. If the icons are not displayed, tap anywhere on the screen.*

  "Guide to the Select Photo Screen (Single View)" on page 48

7. Select **Single View**, and then select to edit the photo if necessary.

   "Menu Options for Editing Photos" on page 54

8. Select **Next**, make settings on the **Basic Settings** tab, and then set the number of copies.

   "Menu Options for Paper and Print Settings" on page 53

9. Select **Advanced Settings** tab, and then change the settings as necessary.

10. Select **Basic Settings** tab, and then tap ⊡.

11. Confirm that printing is complete, and then select **Close**.

    If you notice print quality problems such as banding, unexpected colors, or blurry images, select **Troubleshooting** to see the solutions.

Guide to the Select Photo Screen (Tile View)

You can select photos from the thumbnail screen. This is useful when selecting a few photos from a large number of photos.

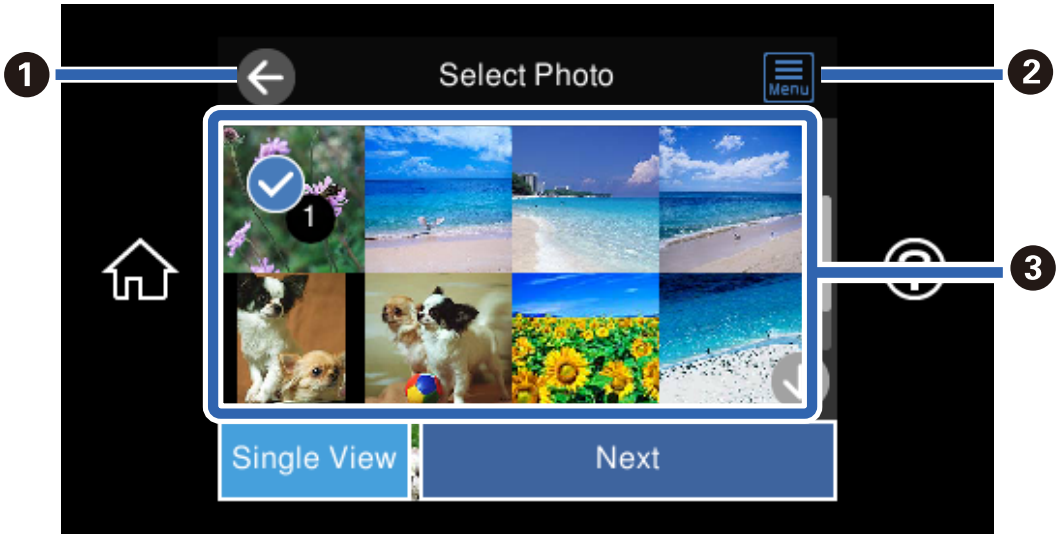

❶	Returns to the previous screen.
❷	Displays the **Select Photo Menu** that allows you to select photos easily.
❸	Tap photos to select them. The selected photos have check marks and the number of prints on them.

Guide to the Select Photo Screen (Single View)

Select **Single View** on the select photo screen to display this screen. Here you can view enlarged photos one by one.

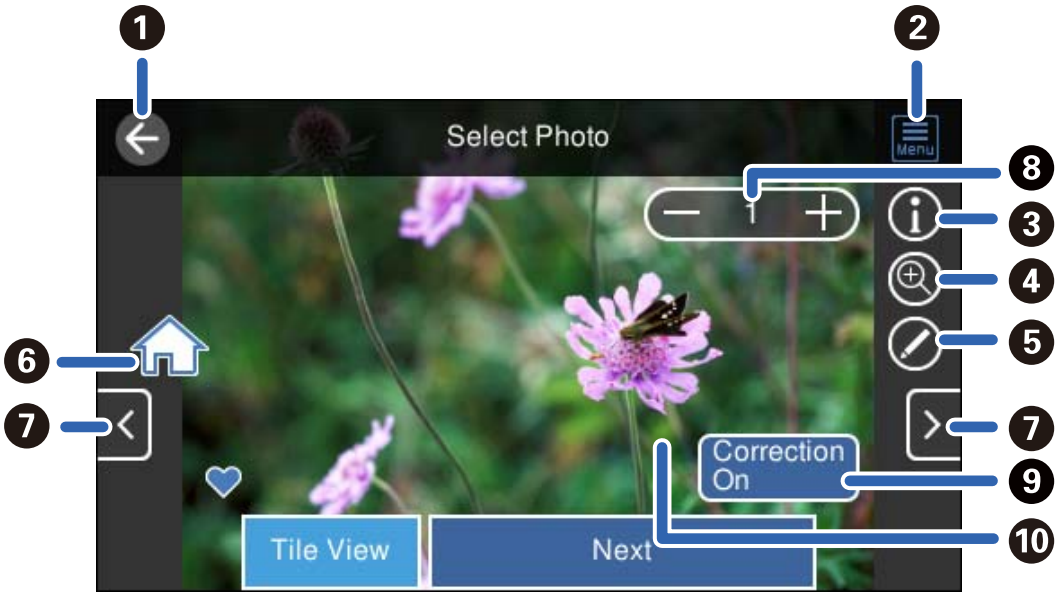

❶	Returns to the previous screen.
❷	Displays the **Select Photo Menu** that allows you to select photos easily.
❸	Displays Exif information such as the shooting date or shutter speed.
❹	Enlarges a photo. Tap + to enlarge the photo and slide to display the part you want to check. Tap - to return to the original view. You can also pinch out to enlarge the image and pinch in to reduce it. Enlargement on this screen does not change the print result.
❺	You can crop the photo or apply color correction.
❻	Displays the home screen.
❼	Scrolls the screen to the right or left to display another photo.
❽	Sets the number of prints. Select - or +, or select the value to enter the number of prints using the on-screen keypad.
❾	Select to switch between **Correction On** and **Correction Off**. When **Correction On** is selected, the color correction adjusted on the **Image Settings** screen becomes visible on the screen. When **Correction Off** is selected, the color correction remains invisible, but the correction is applied on the printout.
❿	Tapping an empty part of the screen hides the icons. Tap the screen again to restore the icons.

Printing Collages of Photos and Background Patterns

You can print photos on a memory device by creating a layout and adding a background design.

1. Load paper in the printer.

   "Loading Paper" on page 35

2. Insert a memory device into the SD card slot or the external interface USB port of the printer.

   "Inserting and Removing a Memory Card" on page 43

   "Inserting and Removing an External USB Device" on page 43

3. Select **Print Photos** on the control panel.

4. Select **Collage** > **Photo Collage**.

5. Select the layout.

6. Select the type of background you want to use. This may not be available for some layouts.

   ❏ Design

   Select the pattern, such as borders or polka dots, or **Original Design**, and then select the pattern you created using the design paper feature.

   ❏ No Background

   Go to the next step.

7. When a message telling you that loading photos is complete is displayed, select **OK**.

8. Do one of the following.

   ❏ When you select single photo layout in step 5: Select ⊕, select one photo on the select photo screen, and then select **Next**. Go to step 13.

   ❏ When you select multiple photo layout in step 5 and place photos automatically: Select **Automatic Layout**, select photos on the select photo screen, and then select **Next**. Go to step 13.

   ❏ When you select multiple photo layout and place photos manually: Go to the next step.

9. Select ⊕.

10. Select the photo you want to print on the select photo screen, and then select **Done**.

    Select **Single View**, and then select ✎ to edit the photo if necessary.

    "Menu Options for Editing Photos" on page 54

11. Repeat steps 9 to 10 until all photos are placed.
12. Select **Next**.
13. Make the settings on the **Basic Settings** tab, and then set the number of copies.
    "Menu Options for Paper and Print Settings" on page 53
14. Select **Advanced Settings** tab, and then change the settings as necessary.
15. Select **Basic Settings** tab, and then tap ⊡.

Printing at ID Photo Size

You can print ID photos using data on a memory device. Two copies of one photo are printed at two different sizes, 50.8×50.8 mm and 45.0×35.0 mm, on 10×15 cm (4×6 in.) size photo paper.

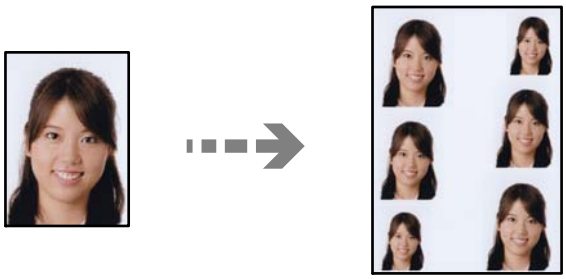

1. Load paper in the printer.
   "Loading Paper" on page 35
2. Insert a memory device into the SD card slot or the external interface USB port of the printer.
   "Inserting and Removing a Memory Card" on page 43
   "Inserting and Removing an External USB Device" on page 43
3. Select **Print Photos** on the control panel.
4. Select **Collage** > **Print Photo ID**.
5. When a message telling you that loading photos is complete is displayed, select **OK**.
6. Select ⊕.
7. Select the photo you want to print on the select photo screen, and then select **Done**.

   Select **Single View**, and then select ✎ to edit the photo if necessary.
   "Menu Options for Editing Photos" on page 54
8. Select **Next**.
9. Make the settings on the **Basic Settings** tab, and then set the number of copies.
   "Menu Options for Paper and Print Settings" on page 53

10. Select **Advanced Settings** tab, and then change the settings as necessary.

11. Select **Basic Settings** tab, and then tap ⊡.

Printing Photos with Handwritten Notes

You can print a photo on a memory device with handwritten text or drawings. This allows you to create original cards such as New Year's cards or birthday cards.

First select a photo and print a template on plain paper. Write or draw on the template and then scan it with the printer. You can then print the photo with your own personal notes and drawings.

1. Insert a memory device into the SD card slot or the external interface USB port of the printer.

   "Inserting and Removing a Memory Card" on page 43

   "Inserting and Removing an External USB Device" on page 43

   > ***Important:***
   > *Do not remove the memory device until you have finished printing.*

2. Select **Various Prints** on the control panel.

3. Select **Greeting Card** > **Select Photo and Print Template**.

4. When a message telling you that loading photos is complete is displayed, select **OK**.

5. Select the photo you want to print on the select photo screen, and then select **Next**.

6. Make print settings such as the paper type or layout for printing a photo with handwritten notes, and then select **Select Photo and Print Template**.

7. Load A4-size plain paper in paper cassette 2 to print a template.

   "Loading Paper" on page 35

8. Tap ⊡ to print a template.

9. Check the printout, and then select **Close**.

10. Follow the instructions on the template to write and draw.

11. Close the output tray. Load photo paper in paper cassette 1.

    "Loading Paper" on page 35

12. Select **Print Using the Template**.

13. Select **How To**, and then place the template on the scanner glass.

    Note:
    Make sure that the text on the template is completely dry before placing it on the scanner glass. If there are stains on the scanner glass, the stains are also printed on the photo.

    "Placing Originals" on page 40

14. Select **Edit** to edit the photo if necessary.

    "Menu Options for Editing Photos" on page 54

15. Set the number of copies, and then tap ◇.

Menu Options for Printing from the Control Panel

Menu Options for Selecting Photos

Browse:

Displays the photos on the memory device sorted using specified conditions. Available options depend on the features being used.

- ❏ Cancel Browse:

  Cancels sorting photos and displays all the photos.

- ❏ yyyy:

  Select the year of the photos you want to display.

- ❏ yyyy/mm:

  Select the year and month of the photos you want to display.

- ❏ yyyy/mm/dd:

  Select the year, month, and date of the photos you want to display.

Display Order:

Changes the display order of photos in ascending or descending order.

Select All Photos:

Selects all the photos and sets the number of prints.

Deselect All Photos:

Returns the number of prints of all photos to 0 (zero).

Select Memory device:

Select the device from which you want to load photos.

Menu Options for Paper and Print Settings

Paper Setting:

Select the paper source that you want to use. Select to select the paper size and type.

Border Setting

- ❏ Borderless:

  Prints without margins around the edges. Enlarges the print data slightly more than the paper size so that no margins are printed around the edges of the paper.

- ❏ With Border:

  Prints with white margins around the edges.

Expansion:

With borderless printing, the image is enlarged a little to remove borders from the edges of the paper. Select how much to enlarge the image.

Fit Frame:

If the aspect ratio of the image data and the paper size is different, the image is automatically enlarged or reduced so that the short sides match the short sides of the paper. The long side of the image is cropped if it extends beyond the long side of the paper. This feature may not work for panorama photos.

Quality:

Select the print quality. Selecting **High** provides higher quality printing, but the printing speed may be slower. If you want to print on plain paper using a much higher quality, select **Best**. Note that the printing speed may slow down considerably. If you want to print on Epson Ultra Glossy Photo Paper using a much higher quality, select **Best(Ultra Glossy)**. Note that the printing speed may slow down considerably.

Date:

Select the format used to print the date on photos for photos that include the date the photos were taken or the date they were saved. The date is not printed for some layouts.

Print Info On Photos

- ❏ Off:

  Prints without any information.

- ❏ Camera Settings:

  Prints with some Exif information, such as shutter speed, f-ratio, or ISO sensitivity. Unrecorded information is not printed.

- ❏ Camera Text:

  Prints text set on the digital camera. For information on the text settings, see the documentation provided with your camera. The information can only be printed in borderless printing on 10×15 cm, 13×18 cm, or 16:9 wide size.

- ❏ Landmark:

  Prints the name of the place or landmark where the photo was taken for digital cameras that have the landmark feature. See the website of the manufacturer of your camera for more details. The information can only be printed in borderless printing on 10×15 cm, 13×18 cm, or 16:9 wide size.

Clear All Settings:

Resets the paper and print settings to their defaults.

CD Density:

For CD/DVD printing. Set the density to use when printing onto a CD/DVD.

Density:

For coloring book printing. Select the level of density for the outlines on the coloring sheet.

Line Detection:

For coloring book printing. Select the sensitivity used to detect outlines in the photo.

Menu Options for Editing Photos

Zoom/Rotate:

Adjusts the cropping area. You can move the frame to the area you want to crop, or change the size of the frame by sliding the ● marks at the corners. You can also rotate the frame.

Filter:

Prints in sepia or monochrome.

Enhance:

Select one of the image adjustment options. **Auto**, **People**, **Landscape**, or **Night Scene** produces sharper images and more vivid colors by automatically adjusting the contrast, saturation, and brightness of the original image data.

- ❏ Auto:

  The printer detects the image content and automatically enhances the image according to the detected content.

- ❏ People:

  Recommended for images of people.

- ❏ Landscape:

  Recommended for images of landscape or scenery.

- ❏ Night Scene:

  Recommended for images of night scenes.

- ❏ Enhance Off:

  Turns off the **Enhance** feature.

Fix Red-Eye:

Fixes red-eye in photos. Corrections are not applied to the original file, only to the printouts. Depending on the type of photo, parts of the image other than the eyes may be corrected.

Brightness:

Adjusts the brightness of the image.

Contrast:

Adjusts the difference between the brightness and darkness.

Sharpness:

Enhances or defocuses the outline of the image.

Saturation:

Adjusts the vividness of the image.

Printing Photos from a Computer

Epson Photo+ allows you to print photos easily and finely in various layouts on photo paper or CD/DVD labels (CD/DVD label printing is only supported by some models.). See the application's help for details.

Printing Photos from Smart Devices (iOS)

You can print photos from a smart device such as a smartphone or tablet.

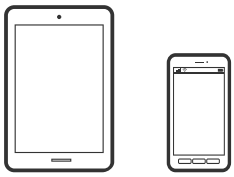

Printing Photos Using Epson Smart Panel

Note:
Operations may differ depending on the device.

1. Load paper in the printer.

   "Loading Paper" on page 35

2. Set up your printer for wireless printing.

3. If Epson Smart Panel is not installed, install it.

   "Application for Easily Operating the Printer from a Smart device (Epson Smart Panel)" on page 262

4. Connect your smart device to the same wireless network as your printer.

5. Start Epson Smart Panel.

6. Select the print photo menu on the home screen.

7. Select the photo you want to print.

8. Start printing.

Printing Photos Using AirPrint

AirPrint enables instant wireless printing from iPhone, iPad, iPod touch, and Mac without the need to install drivers or download software.

Works with Apple AirPrint

Note:
If you disabled paper configuration messages on your product control panel, you cannot use AirPrint. See the link below to enable the messages, if necessary.

1. Load paper in the printer.

   "Loading Paper" on page 35

2. Set up your printer for wireless printing. See the link below.

   https://epson.sn

3. Connect your Apple device to the same wireless network that your product is using.

4. Print from your device to your product.

   Note:
   For details, see the AirPrint page on the Apple website.

Related Information

➡ "Cannot Print Even Though a Connection has been Established (iOS)" on page 177

Printing Photos from Smart Devices (Android)

You can print photos from a smart device such as a smartphone or tablet.

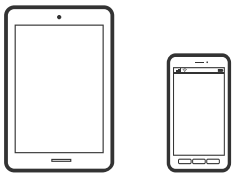

Printing Photos Using Epson Smart Panel

Note:
Operations may differ depending on the device.

1. Load paper in the printer.

   "Loading Paper" on page 35

2. Set up your printer for wireless printing.

3. If Epson Smart Panel is not installed, install it.

   "Application for Easily Operating the Printer from a Smart device (Epson Smart Panel)" on page 262

4. Connect your smart device to the same wireless network as your printer.

5. Start Epson Smart Panel.

6. Select the print photo menu on the home screen.

7. Select the photo you want to print.

8. Start printing.

Printing Photos Using Epson Print Enabler

You can wirelessly print your documents, emails, photos, and web pages right from your Android phone or tablet (Android v4.4 or later). With a few taps, your Android device will discover an Epson printer that is connected to the same wireless network.

Note:
Operations may differ depending on the device.

1. Load paper in the printer.

   "Loading Paper" on page 35

2. Set up your printer for wireless printing.

3. On your Android device, install the Epson Print Enabler plug-in from Google Play.

4. Connect your Android device to the same wireless network as your printer.

5. Go to **Settings** on your Android device, select **Printing**, and then enable Epson Print Enabler.

6. From an Android application such as Chrome, tap the menu icon and print whatever is on the screen.

   Note:
   *If you do not see your printer, tap **All Printers** and select your printer.*

Printing Using Mopria Print Service

Mopria Print Service enables instant wireless printing from Android smart phones or tablets.

1. Install Mopria Print Service from Google Play.

2. Load paper in the printer.

3. Set up your printer for wireless printing. See the link below.

   https://epson.sn

4. Connect your Android device to the same wireless network that your printer is using.

5. Print from your device to your printer.

   Note:
   For more details, access the Mopria Web site at https://mopria.org.

Printing Photos from a Digital Camera

Note:
- ❏ *You can print photos directly from a PictBridge-compatible digital camera. For more details on making operations on your camera, see the documentation provided with your camera.*
- ❏ *Usually digital camera settings are given priority; however, in the following situations, the printer settings are given priority.*
  - ❏ When the camera's print setting is set to "use printer settings"
  - ❏ When the **Sepia** or **B&W** option is selected in the printer's print settings.
  - ❏ When combining the print settings of the camera and the printer produces settings that are not available on the printer.

Printing Photos from a Digital Camera Connected by USB Cable

You can print photos directly from a digital camera connected by USB cable.

1. Remove a memory device from the printer.

2. Load paper in the printer.

   "Loading Paper" on page 35

3. Select **Settings** > **Camera Print Settings** on the control panel.

4. Select **Print Settings** or **Photo Adjustments** and change the settings if necessary.

5. Turn on the digital camera, and then connect to the printer using a USB cable.

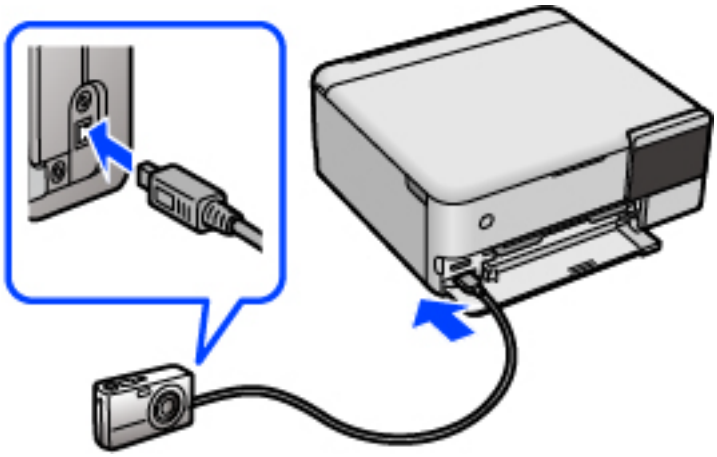

Note:
Use a USB cable that is shorter than two meters.

6. Select the photos you want to print from the digital camera, make settings such as the number of copies, and then start printing.

Printing Photos from a Digital Camera Connected Wirelessly

You can wirelessly print photos from digital cameras that support the DPS over IP standard (from here on referred to as PictBridge (wireless LAN)).

1. Make sure the icon that indicates that the printer is connected to a wireless network is displayed on the home screen.

   "Guide to the Network Icon" on page 26

2. Load paper in the printer.

   "Loading Paper" on page 35

3. Select **Settings** > **Camera Print Settings** on the control panel.

4. Select **Print Settings** or **Photo Adjustments** and change the settings if necessary.

5. Connect the digital camera to the same network as the printer.

6. Display the list of available printers on the digital camera, and then select the printer you want to connect to.

   Note:
   - *To check the printer's name, tap the network status icon on the home screen.*
   - *If your digital camera has a function that allows you to register printers, you can connect to the printer by selecting it from the next time.*

7. Select the photos you want to print from the digital camera, make settings such as the number of copies, and then start printing.

8. Disconnect the PictBridge (wireless LAN) connection to the printer from the digital camera.

> ***Important:***
> *When using PictBridge (wireless LAN), you cannot use other printer functions or print from other devices. Disconnect immediately when you have finished printing.*

Printing on Envelopes

Printing on Envelopes from a Computer (Windows)

1. Load envelopes in the printer.
   "Loading Paper" on page 35
2. Open the file you want to print.
3. Access the printer driver window.
4. Select the envelope size from **Document Size** on the **Main** tab, and then select **Envelope** from **Paper Type**.
5. Set the other items on the **Main** and **More Options** tabs as necessary, and then click **OK**.
6. Click **Print**.

Printing on Envelopes from a Computer (Mac OS)

1. Load envelopes in the printer.
   "Loading Paper" on page 35
2. Open the file you want to print.
3. Select **Print** from the **File** menu or another command to access the print dialog.
4. Select the size as the **Paper Size** setting.
5. Select **Print Settings** from the pop-up menu.
6. Select **Envelope** as the **Media Type** setting.
7. Set the other items as necessary.
8. Click **Print**.

Printing Documents

Printing from a Computer - Windows

Printing Using Easy Settings

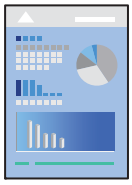

Note:
Operations may differ depending on the application. See the application's help for details.

1. Load paper in the printer.
   "Loading Paper" on page 35
2. Open the file you want to print.
3. Select **Print** or **Print Setup** from the **File** menu.
4. Select your printer.
5. Select **Preferences** or **Properties** to access the printer driver window.

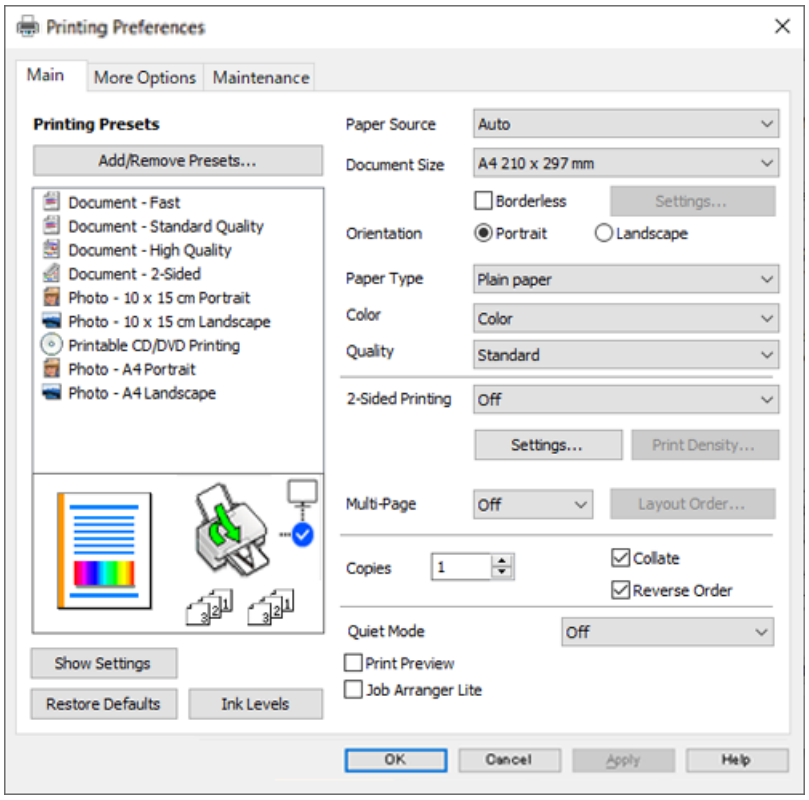

6. Change the settings as necessary.

   You can see the online help for explanations of the setting items. Right-clicking an item displays **Help**.

7. Click **OK** to close the printer driver window.

8. Click **Print**.

Related Information

➡ "Available Paper and Capacities" on page 253

Adding Printing Presets for Easy Printing

If you create your own preset for frequently used print settings in the printer driver, you can print easily by selecting the preset from the list.

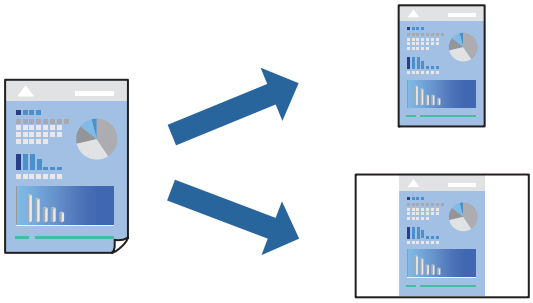

1. On the printer driver's **Main** or **More Options** tab, select the settings you want to include in the preset (such as **Document Size** and **Paper Type**).

2. Click **Add/Remove Presets** in **Printing Presets**.

3. Enter a **Name** and, if necessary, enter a comment.

4. Click **Save**.

   Note:
   *To delete an added preset, click **Add/Remove Presets**, select the preset name you want to delete from the list, and then delete it.*

5. Click **Print**.

The next time you want to print using the same settings, select the registered setting name from **Printing Presets**, and click **OK**.

Related Information

➡ "Loading Paper" on page 35
➡ "Printing Using Easy Settings" on page 61

Printing on 2-Sides

You can use either of the following methods to print on both sides of the paper.

❏ Automatic 2-sided printing

❏ Manual 2-sided printing

When the printer has finished printing the first side, flip the paper over to print on the other side.

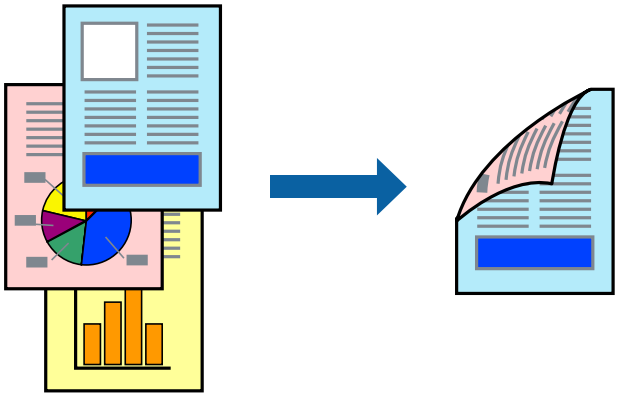

Note:

❏ *This feature is not available for borderless printing.*

❏ *If you do not use paper that is suitable for 2-sided printing, the print quality may decline and paper jams may occur.*
"Paper for 2-Sided Printing" on page 257

❏ *Depending on the paper and the data, ink may bleed through to the other side of the paper.*

❏ *You cannot perform manual 2-sided printing unless **EPSON Status Monitor 3** is enabled. If **EPSON Status Monitor 3** is disabled, access the printer driver window, click **Extended Settings** on the **Maintenance** tab, and then select **Enable EPSON Status Monitor 3**.*

❏ *However, it may not be available when the printer is accessed over a network or is used as a shared printer.*

1. On the printer driver's **Main** tab, select the method of **2-Sided Printing**.

2. Click **Settings**, make the appropriate settings, and then click **OK**.

3. Click **Print Density**, make the appropriate settings, and then click **OK**.

   When setting **Print Density**, you can adjust print density according to the document type.

   Note:

   ❏ *This setting is not available when you select manual 2-sided printing.*

   ❏ *Printing may be slow depending on the combination of options selected for **Select Document Type** in the Print Density Adjustment window and for **Quality** on the **Main** tab.*

4. Select other settings on the **Main** and **More Options** tabs as necessary, and then click **OK**.

5. Click **Print**.

   For manual 2-sided printing, when the first side has finished printing, a pop-up window is displayed on the computer. Follow the on-screen instructions.

Related Information

➡ "Available Paper and Capacities" on page 253

➡ "Loading Paper" on page 35

➡ "Printing Using Easy Settings" on page 61

Printing a Booklet

You can also print a booklet that can be created by re-ordering the pages and folding the printout.

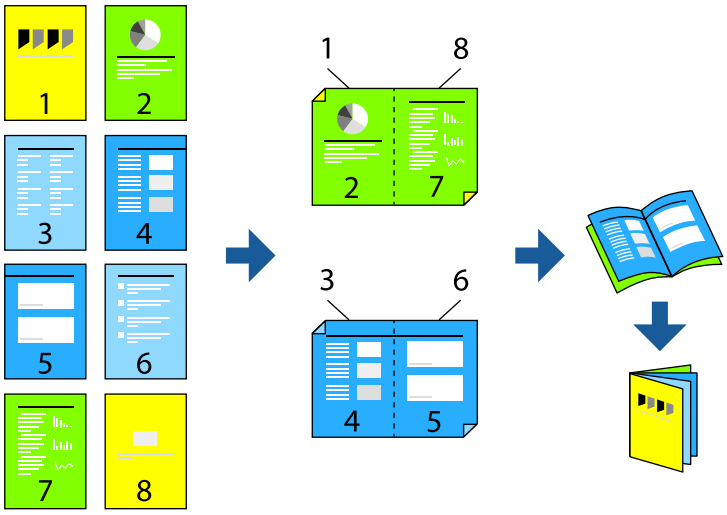

Note:

- *This feature is not available with borderless printing.*
- *If you do not use paper that is suitable for 2-sided printing, the print quality may decline and paper jams may occur.*
  "Paper for 2-Sided Printing" on page 257
- *Depending on the paper and the data, ink may bleed through to the other side of the paper.*
- *You cannot perform manual 2-sided printing unless **EPSON Status Monitor 3** is enabled. If **EPSON Status Monitor 3** is disabled, access the printer driver window, click **Extended Settings** on the **Maintenance** tab, and then select **Enable EPSON Status Monitor 3**.*
- *However, it may not be available when the printer is accessed over a network or is used as a shared printer.*

1. On the printer driver's **Main** tab, select the type of long-edge binding you want to use from **2-Sided Printing**.
2. Click **Settings**, select **Booklet**, and then select **Center Binding** or **Side Binding**.
   - Center Binding: Use this method when printing a small number of pages that can be stacked and easily folded in half.
   - Side Binding. Use this method when printing one sheet (four pages) at a time, folding each in half, and then putting them together in one volume.
3. Click **OK**.
4. When printing data that has a lot of photos and images, click **Print Density**, and then make the appropriate settings, and then click **OK**.

   When setting **Print Density**, you can adjust print density according to the document type.

   Note:
   *Printing may be slow depending on the combination of options selected for **Select Document Type** in the Print Density Adjustment window and for **Quality** on the **Main** tab.*
5. Select other settings on the **Main** and **More Options** tabs as necessary, and then click **OK**.
6. Click **Print**.

Related Information

➡ "Available Paper and Capacities" on page 253
➡ "Loading Paper" on page 35
➡ "Printing Using Easy Settings" on page 61

Printing Several Pages on One Sheet

You can print several pages of data on a single sheet of paper.

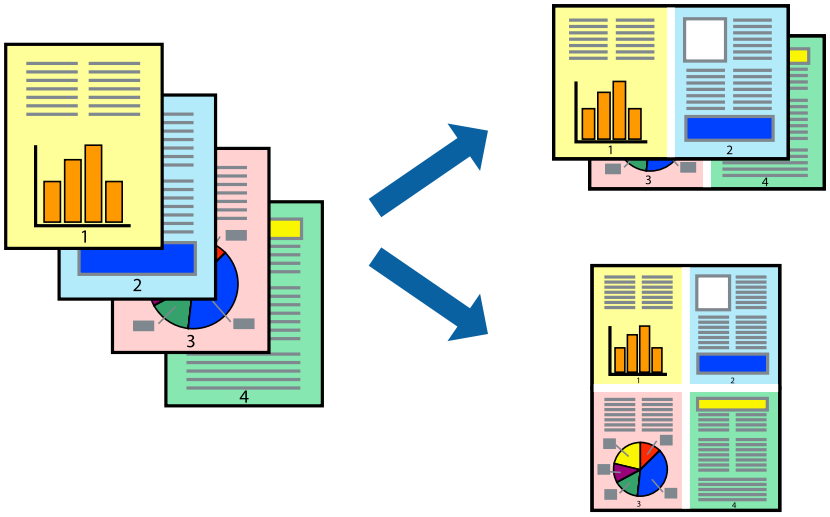

Note:
This feature is not available with borderless printing.

1. On the printer driver's **Main** tab, select **2-Up**, **4-Up**, **6-Up**, **8-Up**, **9-Up**, or **16-Up** as the **Multi-Page** setting.
2. Click **Layout Order**, make the appropriate settings, and then click **OK**.
3. Select other settings on the **Main** and **More Options** tabs as necessary, and then click **OK**.
4. Click **Print**.

Related Information

➡ "Loading Paper" on page 35
➡ "Printing Using Easy Settings" on page 61

Printing to Fit the Paper Size

Select the paper size you loaded in the printer as the Destination Paper Size setting.

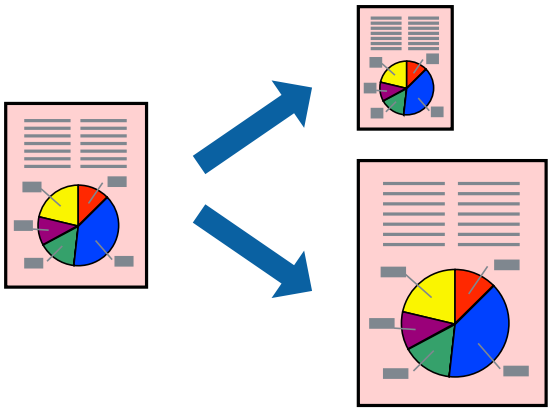

Note:
This feature is not available with borderless printing.

1. On the printer driver's **More Options** tab, make the following settings.
   - ❏ Document Size: Select the size of the paper you set in the application setting.
   - ❏ Output Paper: Select the paper size you loaded in the printer.
     Fit to Page is automatically selected.

   Note:
   *Click **Center** to print the reduced image in the middle of the paper.*

2. Select other settings on the **Main** and **More Options** tabs as necessary, and then click **OK**.

3. Click **Print**.

Related Information

➡ "Loading Paper" on page 35
➡ "Printing Using Easy Settings" on page 61

Printing a Reduced or Enlarged Document at any Magnification

You can reduce or enlarge the size of a document by a specific percentage.

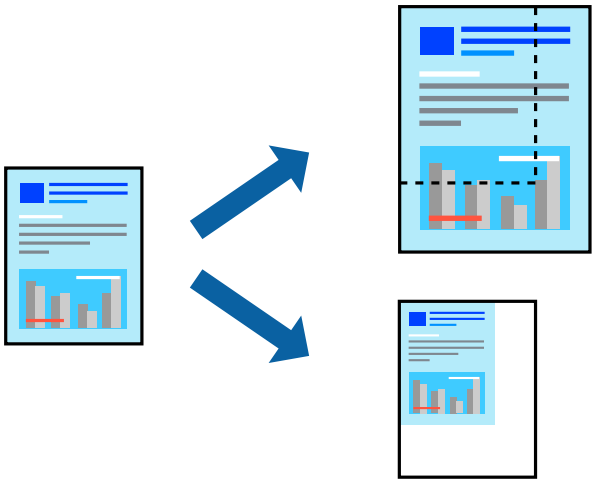

Note:
This feature is not available with borderless printing.

1. On the printer driver's **More Options** tab, select the document size from the **Document Size** setting.
2. Select the paper size you want to print on from the **Output Paper** setting.
3. Select **Reduce/Enlarge Document**, **Zoom to**, and then enter a percentage.
4. Select other settings on the **Main** and **More Options** tabs as necessary, and then click **OK**.
5. Click **Print**.

Related Information

➡ "Loading Paper" on page 35
➡ "Printing Using Easy Settings" on page 61

Printing One Image on Multiple Sheets for Enlargement (Creating a Poster)

This feature allows you to print one image on multiple sheets of paper. You can create a larger poster by taping them together.

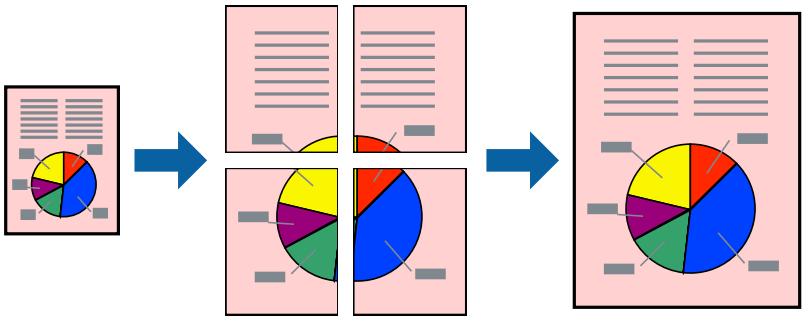

1. On the printer driver's **Main** tab, select **2x1 Poster**, **2x2 Poster**, **3x3 Poster**, or **4x4 Poster** as the **Multi-Page** setting.

2. Click **Settings**, make the appropriate settings, and then click **OK**.

   Note:
   Print Cutting Guides *allows you to print a cutting guide.*

3. Set the other items on the **Main** and **More Options** tabs as necessary, and then click **OK**.

4. Click **Print**.

Related Information

➡ "Loading Paper" on page 35
➡ "Printing Using Easy Settings" on page 61

Making Posters Using Overlapping Alignment Marks

Here is an example of how to make a poster when **2x2 Poster** is selected, and **Overlapping Alignment Marks** is selected in **Print Cutting Guides**.

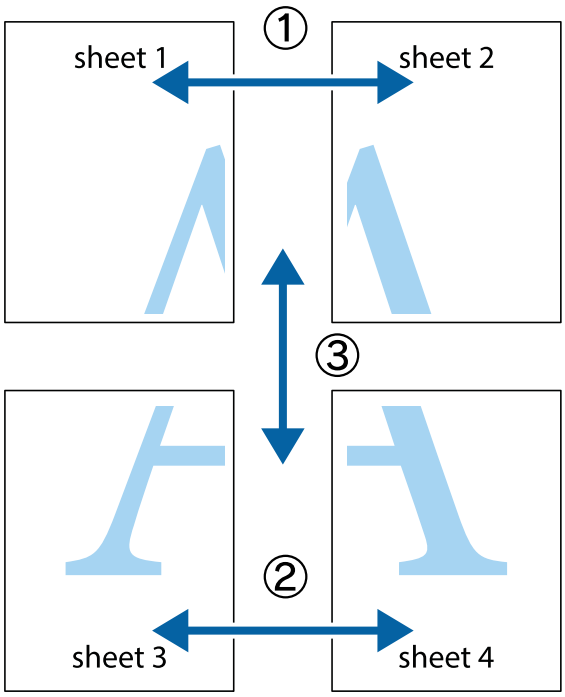

1. Prepare Sheet 1 and Sheet 2. Cut off the margins of Sheet 1 along the vertical blue line through the center of the top and bottom cross marks.

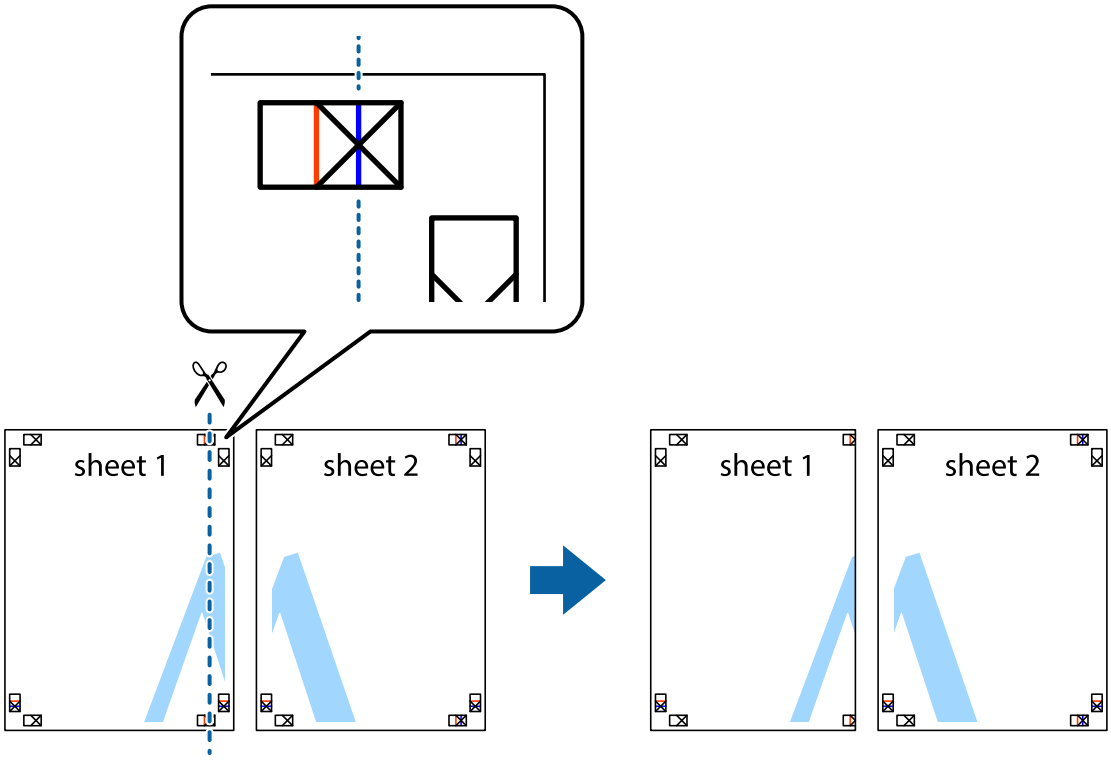

2. Place the edge of Sheet 1 on top of Sheet 2 and align the cross marks, then temporarily tape the two sheets together from the back.

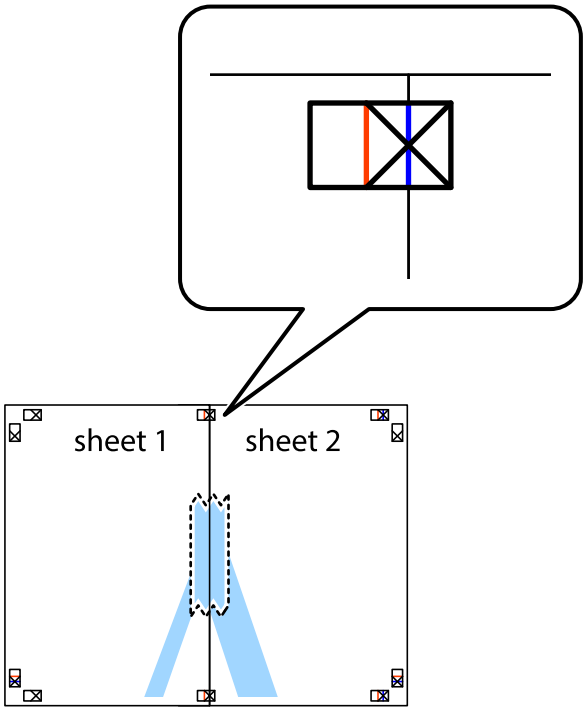

3. Cut the taped sheets in two along the vertical red line through the alignment markers (this time, the line to the left of the cross marks).

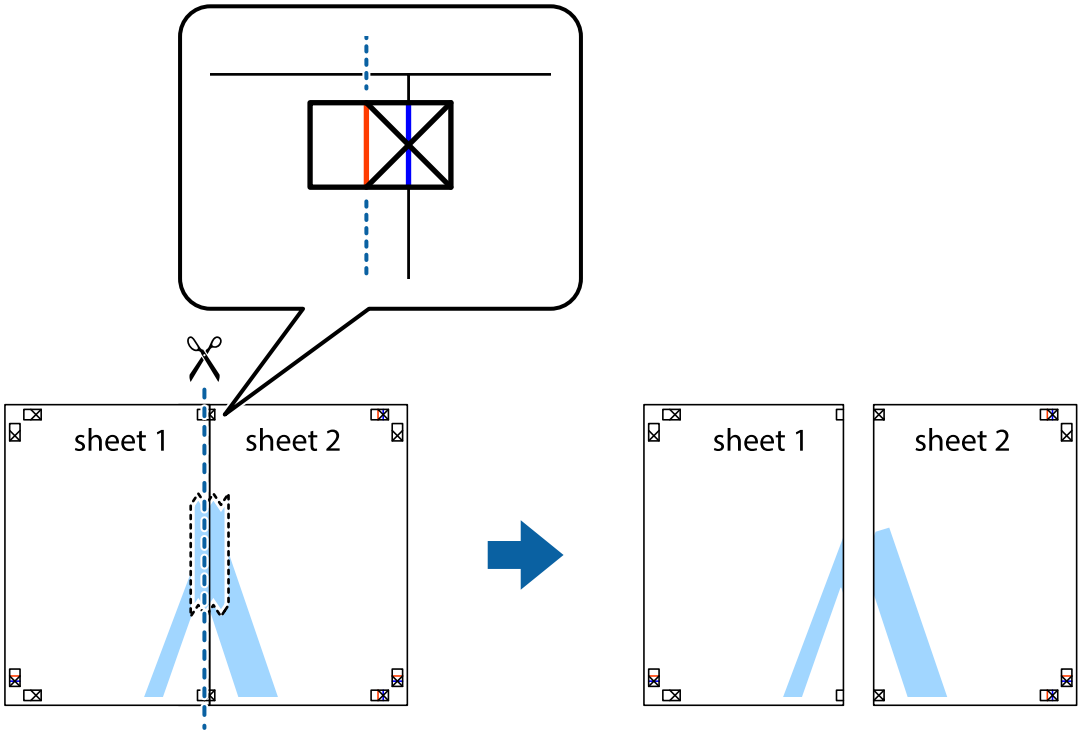

4. Tape the sheets together from the back.

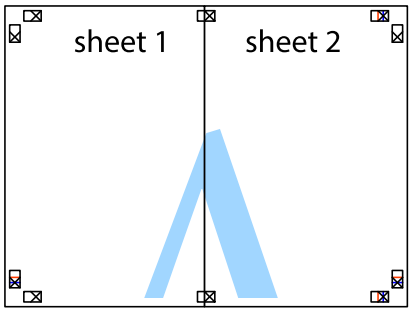

5. Repeat steps 1 to 4 to tape Sheet 3 and Sheet 4 together.

6. Cut off the margins of Sheet 1 and Sheet 2 along the horizontal blue line through the center of the left and right side cross marks.

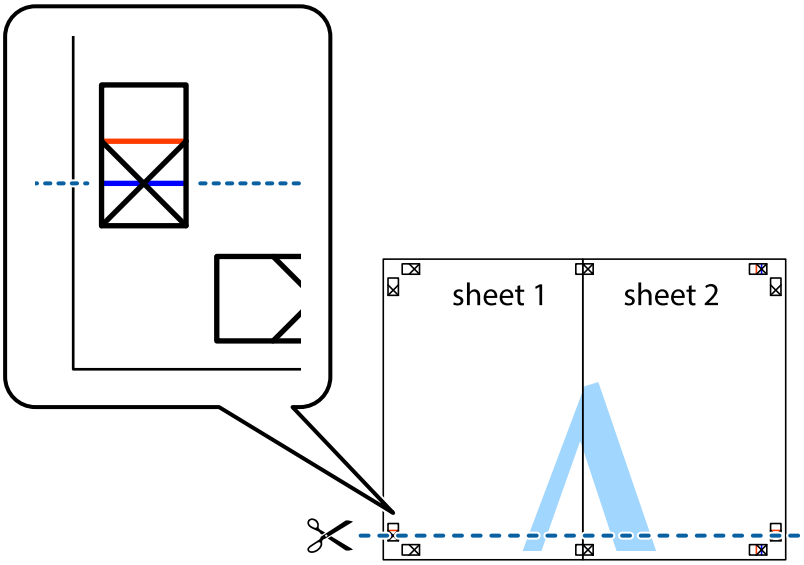

7. Place the edge of Sheet 1 and Sheet 2 on top of Sheet 3 and Sheet 4 and align the cross marks, and then temporarily tape them together from the back.

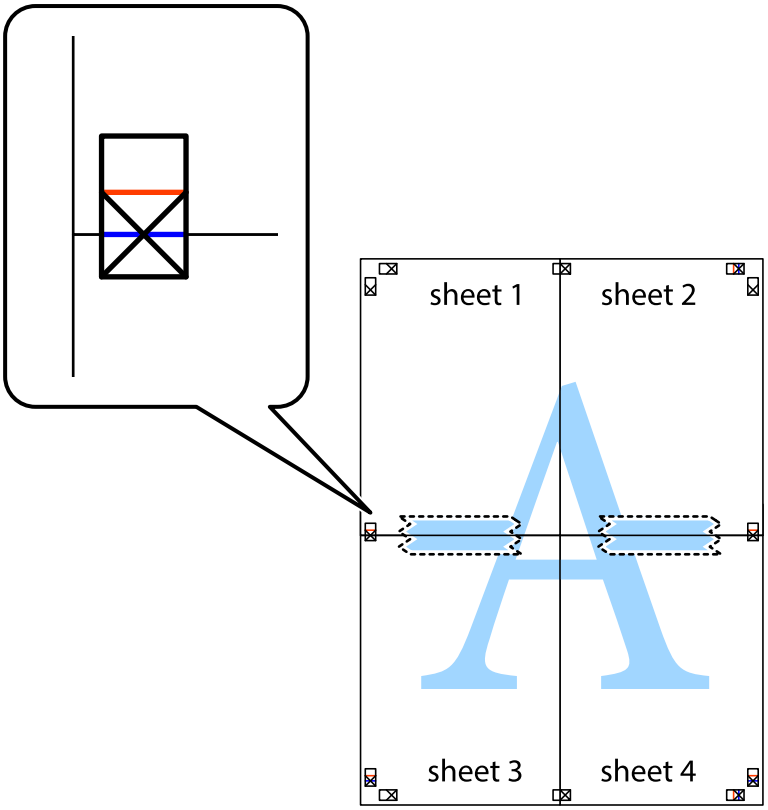

8. Cut the taped sheets in two along the horizontal red line through the alignment markers (this time, the line above the cross marks).

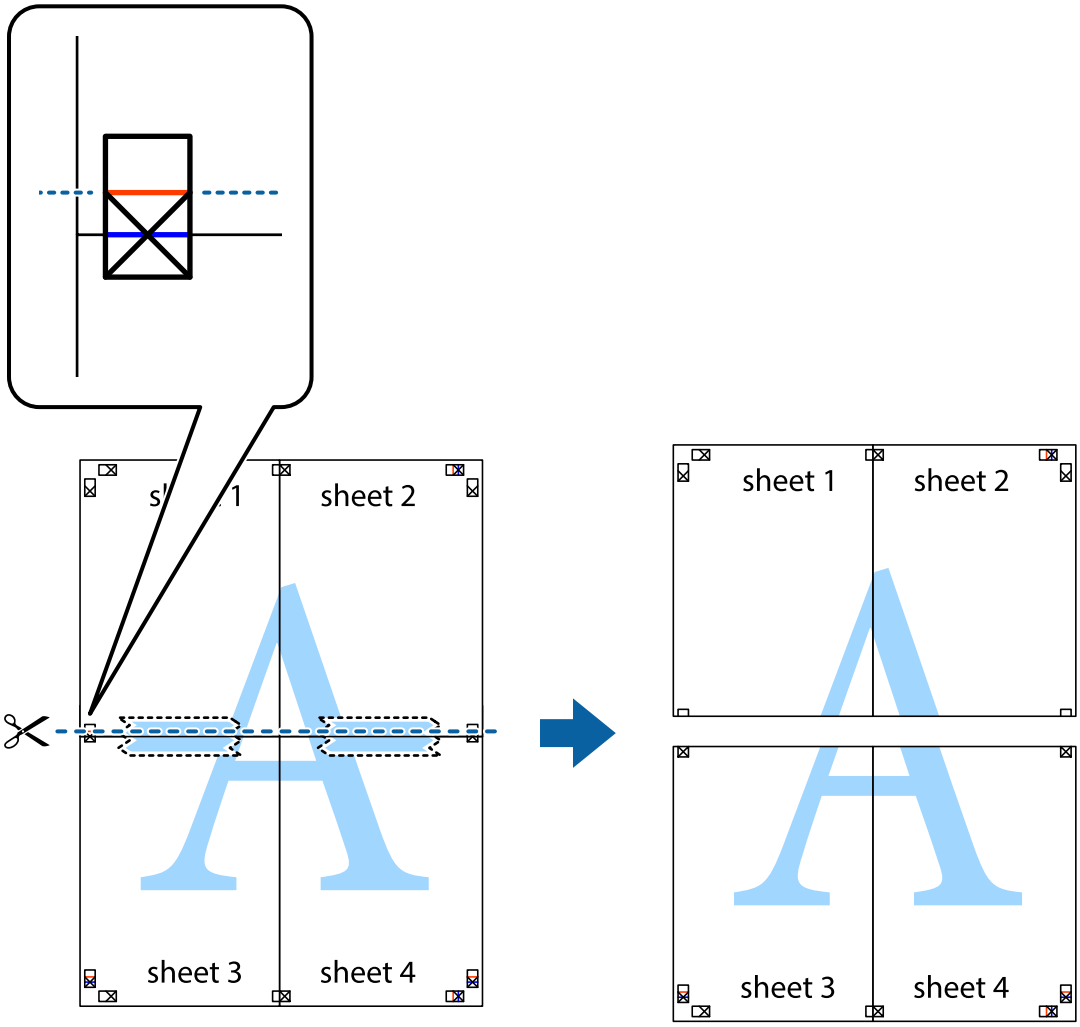

9. Tape the sheets together from the back.

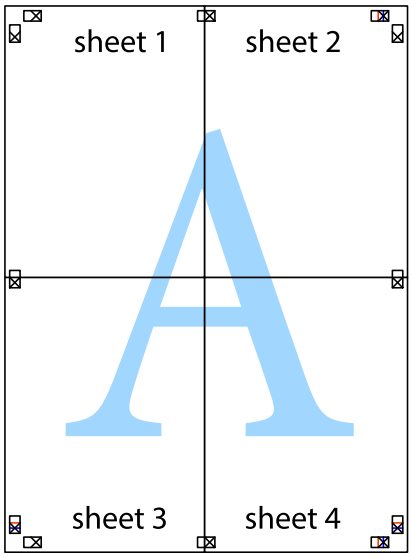

10. Cut off the remaining margins along the outer guide.

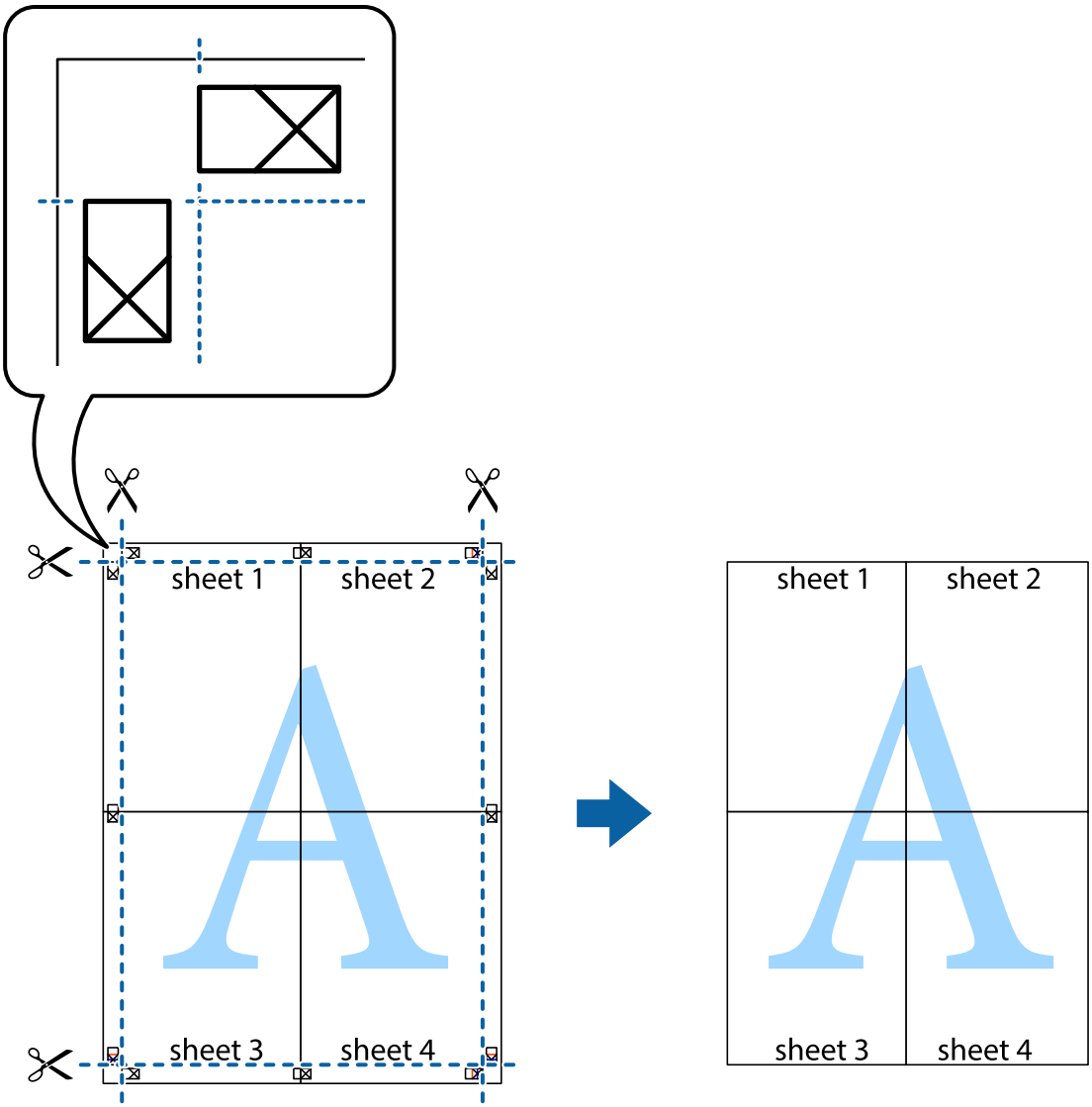

Printing with a Header and Footer

You can print information such as a user name and printing date in headers or footers.

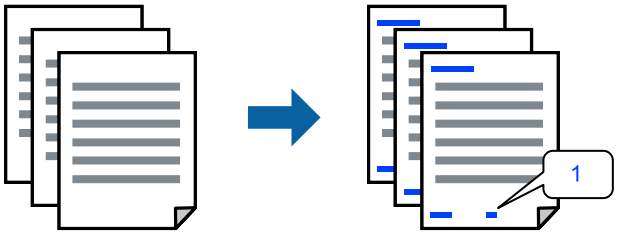

1. On the printer driver's **More Options** tab, click **Watermark Features**, and then select **Header/Footer**.

2. **Settings**, and then select the items you want to print and then click OK.

   Note:
   - ❏ *To specify the first page number, select **Page Number** from the position you want to print in the header or footer, and then select the number in **Starting number**.*
   - ❏ *If you want to print text in the header or footer, select the position you want to print, and then select **Text**. Enter the text you want to print in the text input field.*

3. Select other settings on the **Main** and **More Options** tabs as necessary, and then click **OK**.

4. Click **Print**.

Related Information

➡ "Loading Paper" on page 35
➡ "Printing Using Easy Settings" on page 61

Printing an Anti-Copy Pattern

You can print an anti-copy pattern on your printouts. When printing, the letters themselves are not printed and the entire print is screen-toned lightly. The hidden letters appear when photocopied to easily distinguish the original from the copies.

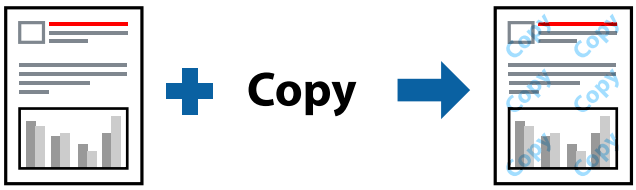

Anti-Copy Pattern is available under the following conditions:

- ❏ Paper Type: Plain paper, Letterhead
- ❏ Borderless: Not selected
- ❏ Quality: Standard
- ❏ 2-Sided Printing: Off, Manual (Long-edge binding), or Manual (Short-edge binding)
- ❏ Color Correction: Automatic
- ❏ Short Grain Paper: Not selected

Note:
You can also add your own anti-copy pattern.

1. On the printer driver's **More Options** tab, click **Watermark Features**, and then select anti-copy pattern.

2. Click **Settings** to change details such as the size or density of the pattern.

3. Set the other items on the **Main** and **More Options** tabs as necessary, and then click **OK**.

4. Click **Print**.

Related Information

➡ "Loading Paper" on page 35
➡ "Printing Using Easy Settings" on page 61

Printing Multiple Files Together

Job Arranger Lite allows you to combine several files created by different applications and print them as a single print job. You can specify the print settings for combined files, such as multi-page layout, and 2-sided printing.

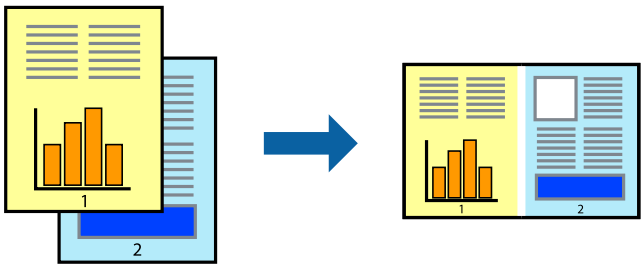

1. On the printer driver's **Main** tab, select **Job Arranger Lite**.

2. Click **Print**.

   When you start printing, the Job Arranger Lite window is displayed.

3. With the Job Arranger Lite window opened, open the file that you want to combine with the current file, and then repeat the above steps.

4. When you select a print job added to Print Project Lite in the Job Arranger Lite window, you can edit the page layout.

5. Click **Print** from the **File** menu to start printing.

   Note:
   *If you close the Job Arranger Lite window before adding all the print data to the Print Project, the print job you are currently working on is canceled. Click **Save** from the **File** menu to save the current job. The extension of the saved files is "ecl".*

   *To open a Print Project, click **Job Arranger Lite** on the printer driver's **Maintenance** tab to open the Job Arranger Lite window. Next, select **Open** from the **File** menu to select the file.*

Related Information

➡ "Loading Paper" on page 35
➡ "Printing Using Easy Settings" on page 61

Printing Using the Color Universal Print Feature

You can enhance the visibility of texts and images in printouts.

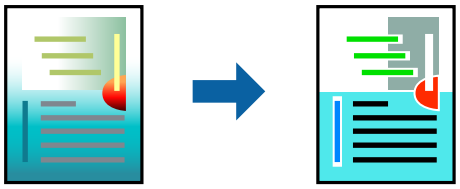

Color Universal Print is only available when the following settings are selected.

- ❏ Paper Type: Plain paper, Letterhead
- ❏ Quality: **Standard** or a higher quality
- ❏ Print Color:**Color**
- ❏ Applications: Microsoft® Office 2007 or later
- ❏ Text Size: 96 pts or smaller

1. On the printer driver's **More Options** tab, click **Image Options** in the **Color Correction** setting.
2. Select an option from the **Color Universal Print** setting.
3. **Enhancement Options** to make further settings.
4. Set the other items on the **Main** and **More Options** tabs as necessary, and then click **OK**.
5. Click **Print**.

   Note:
   - ❏ *Certain characters may be altered by patterns, such as "+" appearing as "±".*
   - ❏ *Application-specific patterns and underlines may alter content printed using these settings.*
   - ❏ *Print quality may decrease in photos and other images when using Color Universal Print settings.*
   - ❏ *Printing is slower when using Color Universal Print settings.*

Related Information

➡ "Loading Paper" on page 35
➡ "Printing Using Easy Settings" on page 61

Adjusting the Print Color

You can adjust the colors used in the print job. These adjustments are not applied to the original data.

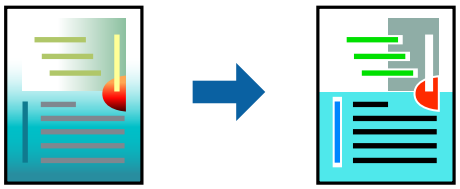

PhotoEnhance produces sharper images and more vivid colors by automatically adjusting the contrast, saturation, and brightness of the original image data.

Note:
PhotoEnhance *adjusts the color by analyzing the location of the subject. Therefore, if you have changed the location of the subject by reducing, enlarging, cropping, or rotating the image, the color may change unexpectedly. Selecting the borderless setting also changes the location of the subject resulting in changes in color. If the image is out of focus, the tone may be unnatural. If the color is changed or becomes unnatural, print in a mode other than* ***PhotoEnhance****.*

1. On the printer driver's **More Options** tab, select the method of color correction from the **Color Correction** setting.
   - ❏ Automatic: This setting automatically adjusts the tone to match the paper type and print quality settings.
   - ❏ Custom: Click **Advanced**, you can make your own settings.
2. Select other settings on the **Main** and **More Options** tabs as necessary, and then click **OK**.
3. Click **Print**.

Related Information

➡ "Loading Paper" on page 35
➡ "Printing Using Easy Settings" on page 61

Printing to Emphasize Thin Lines

You can thicken thin lines that are too thin to print.

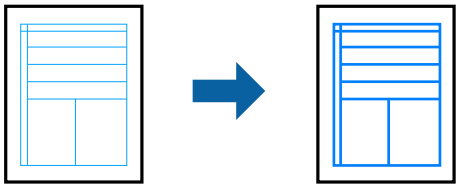

1. On the printer driver's **More Options** tab, click **Image Options** in the **Color Correction** setting.
2. Select **Emphasize Thin Lines**.
3. Select other settings on the **Main** and **More Options** tabs as necessary, and then click **OK**.
4. Click **Print**.

Related Information

➡ "Loading Paper" on page 35
➡ "Printing Using Easy Settings" on page 61

Printing Clear Bar Codes

You can print a bar code clearly and make it easy to scan. Only enable this feature if the bar code you printed cannot be scanned.

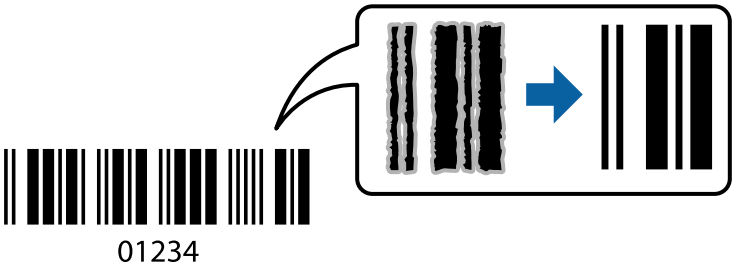

You can use this feature under the following conditions.

❏ Paper Type: Plain paper, Letterhead, or Envelope

❏ Quality: **Standard**

1. On the printer driver's **Maintenance** tab, click **Extended Settings**, and then select **Barcode mode**.

2. Set the other items on the **Main** and **More Options** tabs as necessary, and then click **OK**.

3. Click **Print**.

   Note:
   Deblurring may not always be possible depending on the circumstances.

Related Information

➡ "Loading Paper" on page 35

➡ "Printing Using Easy Settings" on page 61

Printing from a Computer - Mac OS

Printing Using Easy Settings

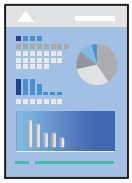

Note:
Operations and screens differ depending on the application. See the application's help for details.

1. Load paper in the printer .

   "Loading Paper" on page 35

2. Open the file you want to print.

3. Select **Print** from the **File** menu or another command to access the print dialog.

   If necessary, click **Show Details** or ▼ to expand the print window.

4. Select your printer.

5. Select **Print Settings** from the pop-up menu.

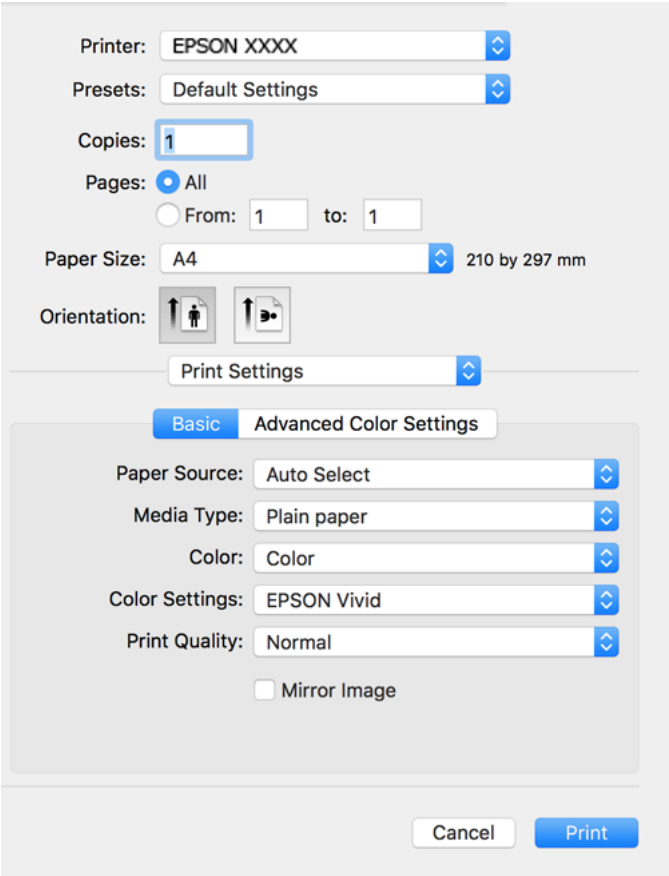

6. Change the settings as necessary.

7. Click **Print**.

Related Information

➡ "Available Paper and Capacities" on page 253

Adding Printing Presets for Easy Printing

If you create your own preset of frequently used print settings on the printer driver, you can print easily by selecting the preset from the list.

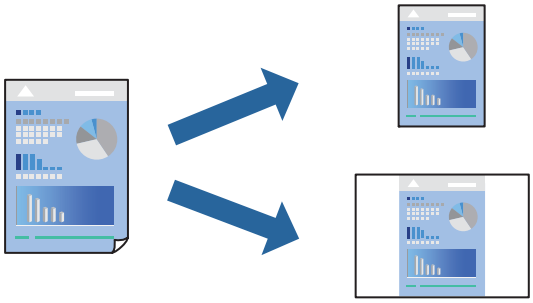

1. Set each item such as **Print Settings** and **Layout** (**Paper Size**, **Media Type**).
2. Click **Presets** to save the current settings as a preset.
3. Click **OK**.

   Note:
   *To delete an added preset, click **Presets** > **Show Presets**, select the preset name you want to delete from the list, and then delete it.*

4. Click **Print**.

The next time you want to print using the same settings, select the registered preset name from the **Presets**.

Related Information

➡ "Loading Paper" on page 35
➡ "Printing Using Easy Settings" on page 78

Printing on 2-Sides

You can print on both sides of the paper.

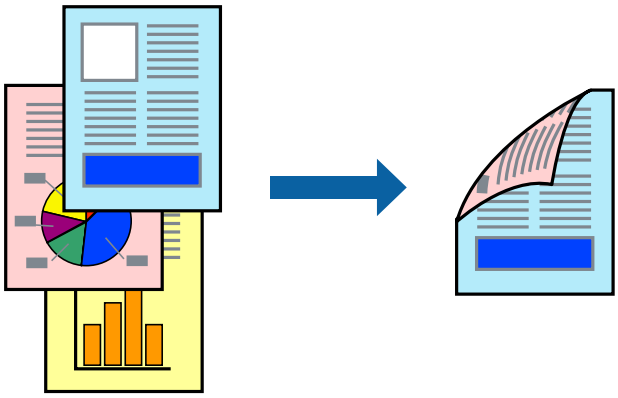

Note:
- ❏ *This feature is not available with borderless printing.*
- ❏ *If you do not use paper that is suitable for 2-sided printing, the print quality may decline and paper jams may occur.*
  "Paper for 2-Sided Printing" on page 257
- ❏ *Depending on the paper and the data, ink may bleed through to the other side of the paper.*

1. Select **Two-sided Printing Settings** from the pop-up menu.
2. Select the bindings in **Two-sided Printing**.
3. Select the type of original in **Document Type**.

   Note:
   - ❏ *Printing may be slow depending on the **Document Type** setting.*
   - ❏ *If you are printing high-density data such as photos or graphs, select **Text with Photo** or **Photo** as the **Document Type** setting. If scuffing occurs or the image bleeds through to the reverse side, adjust the print density and ink drying time by clicking the arrow mark next to **Adjustments**.*
4. Set the other items as necessary.
5. Click **Print**.

Related Information

➡ "Available Paper and Capacities" on page 253
➡ "Loading Paper" on page 35
➡ "Printing Using Easy Settings" on page 78

Printing Several Pages on One Sheet

You can print several pages of data on a single sheet of paper.

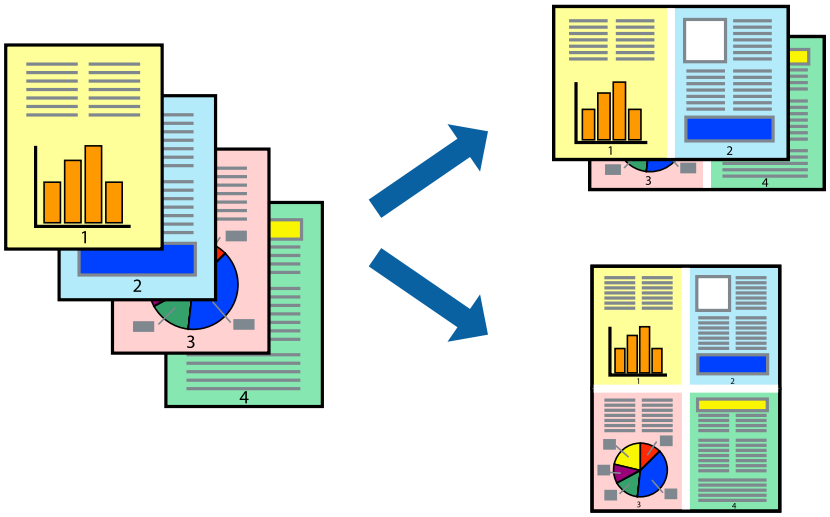

1. Select **Layout** from the pop-up menu.
2. Set the number of pages in **Pages per Sheet**, the **Layout Direction** (page order), and **Border**.

3. Select other settings as necessary.
4. Click **Print**.

Related Information

➡ "Loading Paper" on page 35
➡ "Printing Using Easy Settings" on page 78

Printing to Fit the Paper Size

Select the paper size you loaded in the printer as the Destination Paper Size setting.

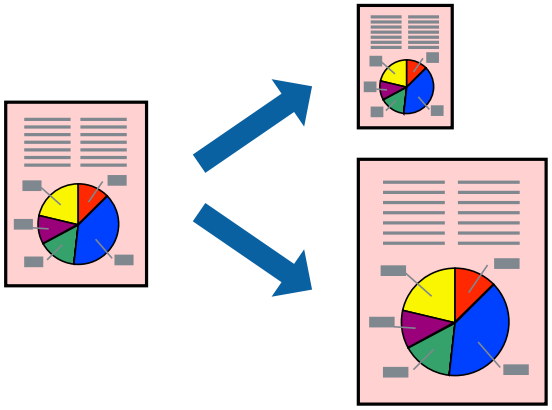

1. Select the size of the paper you set in the application as the **Paper Size** setting.
2. Select **Paper Handling** from the pop-up menu.
3. Select **Scale to fit paper size**.
4. Select the paper size you loaded in the printer as the **Destination Paper Size** setting.
5. Select other settings as necessary.
6. Click **Print**.

Related Information

➡ "Loading Paper" on page 35
➡ "Printing Using Easy Settings" on page 78

Printing a Reduced or Enlarged Document at any Magnification

You can reduce or enlarge the size of a document by a specific percentage.

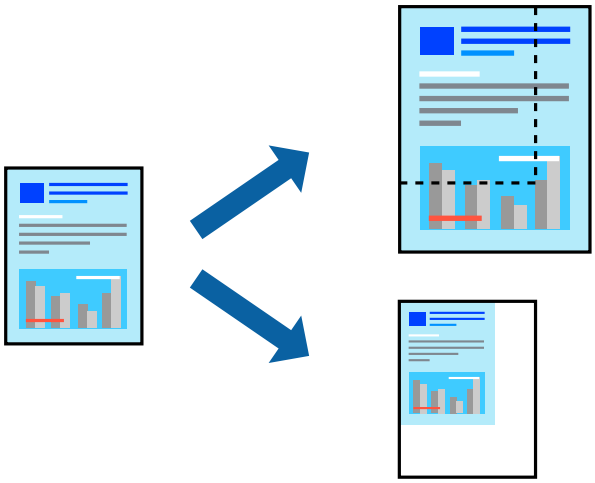

Note:
Operations differ depending on the application. See the application's help for details.

1. Do one of the following.
   - ❑ Select **Print** from the **File** menu of the application. Click **Page Setup**, and then select your printer in **Format For**. Select the size of the data to be printed from **Paper Size**, enter a percentage in **Scale**, and then click **OK**.
   - ❑ Select **Page Setup** from the **File** menu of the application. Select your printer in **Format For**. Select the size of the data to be printed from **Paper Size**, enter a percentage in **Scale**, and then click **OK**. Select **Print** from the **File** menu.
2. Select your printer in **Printer**.
3. Select other settings as necessary.
4. Click **Print**.

Related Information

➡ "Loading Paper" on page 35
➡ "Printing Using Easy Settings" on page 78

Adjusting the Print Color

You can adjust the colors used in the print job. These adjustments are not applied to the original data.

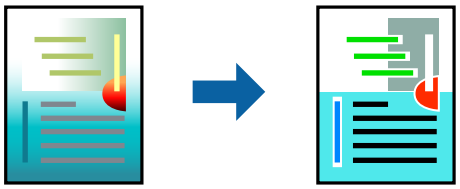

PhotoEnhance produces sharper images and more vivid colors by automatically adjusting the contrast, saturation, and brightness of the original image data.

Note:
PhotoEnhance *adjusts the color by analyzing the location of the subject. Therefore, if you have changed the location of the subject by reducing, enlarging, cropping, or rotating the image, the color may change unexpectedly. Selecting the borderless setting also changes the location of the subject resulting in changes in color. If the image is out of focus, the tone may be unnatural. If the color is changed or becomes unnatural, print in a mode other than* ***PhotoEnhance****.*

1. Select **Color Matching** from the pop-up menu, and then select **EPSON Color Controls**.
2. Select **Print Settings** from the pop-up menu.
3. On the **Basic** tab, select the type of color correction from **Color Settings**.
4. Select the **Advanced Color Settings** tab, and make the appropriate settings.
5. Set the other items as necessary.
6. Click **Print**.

Related Information

➡ "Loading Paper" on page 35
➡ "Printing Using Easy Settings" on page 78

Printing Documents from Smart Devices (iOS)

You can print documents from a smart device such as a smartphone or tablet.

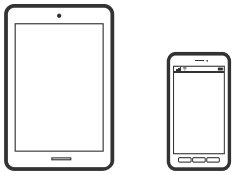

Printing Documents Using Epson Smart Panel

Note:
Operations may differ depending on the device.

1. Load paper in the printer.
   "Loading Paper" on page 35
2. Set up your printer for wireless printing.
3. If Epson Smart Panel is not installed, install it.
   "Application for Easily Operating the Printer from a Smart device (Epson Smart Panel)" on page 262
4. Connect your smart device to the same wireless network as your printer.
5. Start Epson Smart Panel.

6. Select the print document menu on the home screen.
7. Select the document you want to print.
8. Start printing.

Printing Documents Using AirPrint

AirPrint enables instant wireless printing from iPhone, iPad, iPod touch, and Mac without the need to install drivers or download software.

Note:
If you disabled paper configuration messages on your printer control panel, you cannot use AirPrint. See the link below to enable the messages, if necessary.

1. Load paper in the printer.

   "Loading Paper" on page 35

2. Set up your printer for wireless printing. See the link below.

   https://epson.sn

3. Connect your Apple device to the same wireless network that your printer is using.
4. Print from your device to your printer.

   Note:
   For details, see the AirPrint page on the Apple website.

Related Information

➡ "Cannot Print Even Though a Connection has been Established (iOS)" on page 177

Printing Documents from Smart Devices (Android)

You can print documents from a smart device such as a smartphone or tablet.

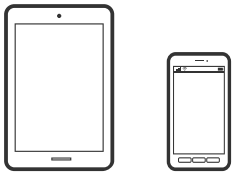

Printing Documents Using Epson Smart Panel

Note:
Operations may differ depending on the device.

1. Load paper in the printer.

   "Loading Paper" on page 35

2. Set up your printer for wireless printing.

3. If Epson Smart Panel is not installed, install it.

   "Application for Easily Operating the Printer from a Smart device (Epson Smart Panel)" on page 262

4. Connect your smart device to the same wireless network as your printer.

5. Start Epson Smart Panel.

6. Select the print document menu on the home screen.

7. Select the document you want to print.

8. Start printing.

Printing Documents Using Epson Print Enabler

You can wirelessly print your documents, emails, photos, and web pages right from your Android phone or tablet (Android v4.4 or later). With a few taps, your Android device will discover an Epson printer that is connected to the same wireless network.

Note:
Operations may differ depending on the device.

1. Load paper in the printer.

   "Loading Paper" on page 35

2. Set up your printer for wireless printing.

3. On your Android device, install the Epson Print Enabler plug-in from Google Play.

4. Connect your Android device to the same wireless network as your printer.

5. Go to **Settings** on your Android device, select **Printing**, and then enable Epson Print Enabler.

6. From an Android application such as Chrome, tap the menu icon and print whatever is on the screen.

   Note:
   *If you do not see your printer, tap **All Printers** and select your printer.*

Printing Using Mopria Print Service

Mopria Print Service enables instant wireless printing from Android smart phones or tablets.

1. Install Mopria Print Service from Google Play.
2. Load paper in the printer.
3. Set up your printer for wireless printing. See the link below.

   https://epson.sn
4. Connect your Android device to the same wireless network that your printer is using.
5. Print from your device to your printer.

   Note:
   For more details, access the Mopria Web site at https://mopria.org.

Printing onto a CD/DVD Label

Printing Photos onto a CD/DVD Label

You can select photos stored on a memory device to print onto a CD/DVD label.

> ***Important:***
> - *Before printing on the CD/DVD, see the CD/DVD handling precautions.*
> - *Do not insert the CD/DVD tray while the printer is operating. This may damage the printer.*

1. Insert a memory device into the SD card slot or the external interface USB port of the printer.

   "Inserting and Removing a Memory Card" on page 43
   "Inserting and Removing an External USB Device" on page 43
2. Select **Various Prints** on the control panel.
3. Select **Copy to CD/DVD** > **Print on CD/DVD**.
4. Select the layout.

   CD/DVD 1-up, **CD/DVD 4-up**, and **CD/DVD Variety** are available.

Note:

- *When you change the outer and inner diameter, select* Menu *at the upper-right of the screen, and then select* ***CD Inner/Outer****. Set the outer and inner diameter using , and then select* ***OK****. You can also set the diameter by selecting the value in the frame and using the on-screen keypad.*

  You can set 114 to 120 mm as the outer diameter, and 18 to 46 mm as the inner diameter in 1 mm increments.
- *The inner diameter and the outer diameter you set are restored to their defaults after printing the disc label. You can change the defaults in* ***Settings*** *>* ***Printer Settings*** *>* ***CD Inner/Outer****.*

5. When a message telling you that loading photos is complete is displayed, select **OK**.

6. Do one of the following.

   - **CD/DVD 1-up**: Select , select a photo, and then select **Done**. Select **Next**, and then go to step 9.
   - **CD/DVD 4-up**: Go to the next step.
   - **CD/DVD Variety**: Select photos until the number of photos that can be set reaches 0. Select **Next**, and then go to step 9.

7. Select , select the photo you want to print on the select photo screen, and then select **Done**.

   Select **Single View**, and then select to edit the photo if necessary.

   "Menu Options for Editing Photos" on page 54

8. Repeat step 7 until all photos are placed, and then select **Next**.

9. Select **CD/DVD** on the **Basic Settings** tab.

   "Menu Options for Paper and Print Settings" on page 53

   Note:
   For test printing, select ***As a trial****, and then load A4 plain paper in paper cassette 2. You can check the printout image before printing on a CD/DVD label.*

   "Loading Paper" on page 35

10. Select **How To**, and load a CD/DVD by referring to the instructions.

> ***Important:***
> *Place a CD/DVD on the CD/DVD tray with the printable side facing up. Press the center of the CD/DVD to securely set it on the CD/DVD tray. Otherwise, the CD/DVD may fall off the tray. Turn over the tray to check that the CD/DVD is firmly secured in the tray.*
>
> 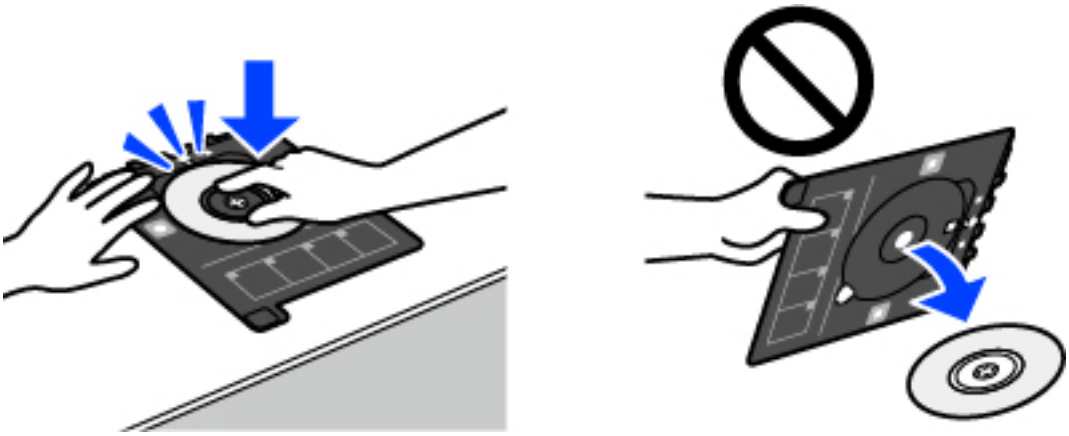

Note:
You may feel slight friction when inserting the tray into the printer. This is normal and you should continue to insert it horizontally.

11. Select **Advanced Settings** tab, and then change the settings as necessary.

12. Select **Basic Settings** tab, and then tap ⊡.

13. When printing has finished, the CD/DVD tray is ejected. Remove the tray from the printer, and then select **Printing Complete**.

> ***Important:***
> *After printing is finished, make sure you remove the CD/DVD tray. If you do not remove the tray and turn the printer on or off, or run head cleaning, the CD/DVD tray will strike the print head and may cause the printer to malfunction.*

14. Remove the CD/DVD and store the CD/DVD tray on the bottom of paper cassette 2.

Printing Photos onto a Jewel Case Jacket

You can easily print photos onto a jewel case jacket using a photo on your memory device. Print the jacket on A4-size paper, and then cut it to fit in the jewel case.

1. Load paper in the printer.

   "Loading Paper" on page 35

2. Insert a memory device into the SD card slot or the external interface USB port of the printer.

   "Inserting and Removing a Memory Card" on page 43

   "Inserting and Removing an External USB Device" on page 43

3. Select **Various Prints** on the control panel.

4. Select **Copy to CD/DVD** > **Print on Jewel Case**.

5. Select the layout.

6. When a message telling you that loading photos is complete is displayed, select **OK**.

7. Do one of the following.

   - When you select **Jewel Upper** in step 5: Select ⊕, select one photo on the select photo screen, and then select **Done**. Select **Next**.
   - When you select **Jewel Index** in step 5: Select photos until the number of photos that can be set reaches 0, and then select **Next**.

   Select **Single View**, and then select ✎ to edit the photo if necessary.

   "Menu Options for Editing Photos" on page 54

8. Make settings on the **Basic Settings** tab.

   "Menu Options for Paper and Print Settings" on page 53

9. Select **Advanced Settings** tab, and then change the settings as necessary.

10. Select **Basic Settings** tab, and then tap ◇.

Printing Photos onto a CD/DVD Label Using Epson Photo+

Epson Photo+ allows you to print photos easily and finely in various layouts on photo paper or CD/DVD labels (CD/DVD label printing is only supported by some models.). See the application's help for details.

Printing Web Pages

Printing Web Pages from a Computer

Epson Photo+ allows you to display web pages, crop to a specified area, and then edit and print them. See the application's help for details.

Printing Web Pages from Smart Devices

Note:
Operations may differ depending on the device.

1. Load paper in the printer.

   "Loading Paper" on page 35

2. Set up your printer for wireless printing.

3. If Epson Smart Panel is not installed, install it.

   "Application for Easily Operating the Printer from a Smart device (Epson Smart Panel)" on page 262

4. Connect your smart device to the same wireless network as your printer.

5. Open the web page you want to print in your web browser app.

6. Tap **Share** from the menu of the web browser application.

7. Select **Smart Panel**.

8. Tap **Print**.

Printing Various Items

Printing Paper with Patterns (Design Paper)

You can print a variety of design paper by using the patterns stored in the printer, such as borders and polka dots. You can also print original patterns with a photo from a memory device. This allows you to use the paper in a variety of ways, such as creating homemade book covers, wrapping paper, and so on. Visit the following website for details on how you can create your own items.

https://epson.sn

Note:
Epson Creative Print allows you to print design paper with a variety of patterns.

"Application for Enjoying a Variety of Photo Printing (Epson Creative Print)" on page 263

1. Load paper in the printer.

   "Loading Paper" on page 35

2. Select **Various Prints** on the control panel.

3. Select **Personal Stationery** > **Design Paper**.

4. Do one of the following.

   ❏ To use patterns stored on the printer, select the pattern such as borders or polka dots.

   ❏ To use photos stored on a memory device, select **Original Design**, and then insert the memory device. To create a new pattern, select **Create**, and then follow the on-screen instructions to select and save a photo.

   "Inserting and Removing a Memory Card" on page 43

   "Inserting and Removing an External USB Device" on page 43

5. Make the paper settings.

6. Enter the number of copies, and then tap ⊡.

Printing Lined Paper

You can print some types of lined paper, graph paper, or music paper and create your own, original notebook or loose-leaf.

1. Load paper in the printer.

   "Loading Paper" on page 35

2. Select **Various Prints** on the control panel.

3. Select **Personal Stationery** > **Ruled Paper**.

4. Select the type of ruled line.

5. Make the paper settings.

6. Enter the number of copies, and then tap ⊡.

Printing Writing Paper

You can easily print original writing paper with a photo from a memory device set as the background. The photo is printed lightly so that it can be easily written on.

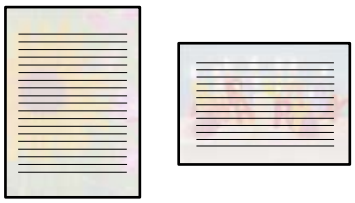

1. Load paper in the printer.

   "Loading Paper" on page 35

2. Insert a memory device into the SD card slot or the external interface USB port of the printer.

   "Inserting and Removing a Memory Card" on page 43

   "Inserting and Removing an External USB Device" on page 43

3. Select **Various Prints** on the control panel.

4. Select **Personal Stationery** > **Writing Papers**.

5. Select the type of writing paper.

6. Select the background.

   The options vary depending on the writing paper type.

7. Do one of the following according to the background you selected in step 6.

   The options vary depending on the background type.

   - ❏ Design

     Select the pattern, such as borders or polka dots, or **Original Design**, and then select the pattern you created using the design paper feature.

   - ❏ Photo

     When a message telling you that loading photos is complete is displayed, select **OK**. Select ⊕, select the photo you want to print on the select photo screen, and then select **Done**. Select **Next**.

   - ❏ Color

     Select the background color.

   - ❏ No Background

     Go to the next step.

8. Make the paper settings.

9. Enter the number of copies, and then tap ◇.

Printing a Schedule

You can easily print a Monthly, Weekly, or Daily schedule.

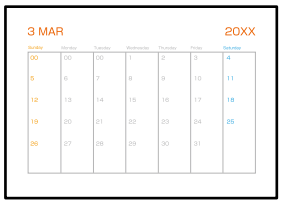

1. Load paper in the printer.
   "Loading Paper" on page 35
2. Select **Various Prints** on the control panel.
3. Select **Personal Stationery** > **Schedule**.
4. Select the type of schedule.
5. When you select **Monthly** or **Daily**, set the date, and then select **OK**.
6. Make the paper settings.
7. Enter the number of copies, and then tap ⊡.

Printing Original Calendars with a Photo

You can easily print original calendars with a photo from a memory device.

1. Load paper in the printer.
   "Loading Paper" on page 35
2. Insert a memory device into the SD card slot or the external interface USB port of the printer.
   "Inserting and Removing a Memory Card" on page 43
   "Inserting and Removing an External USB Device" on page 43
3. Select **Various Prints** on the control panel.

4. Select **Personal Stationery** > **Calendar**.
5. Select the type of calendar.
6. Set the year and month, and then select **OK**.
7. When a message telling you that loading photos is complete is displayed, select **OK**.
8. Select ⊕.
9. Select the photo you want to print on the select photo screen, and then select **Done**.

   Select **Single View**, and then select ✎ to edit the photo if necessary.

   "Menu Options for Editing Photos" on page 54
10. Select **Next**.
11. Enter the number of copies, and then tap ◇.

Printing a Message Card

You can easily print original message cards using a photo on your memory device.

1. Load paper in the printer.

   "Loading Paper" on page 35
2. Insert a memory device into the SD card slot or the external interface USB port of the printer.

   "Inserting and Removing a Memory Card" on page 43
   "Inserting and Removing an External USB Device" on page 43
3. Select **Various Prints** on the control panel.
4. Select **Personal Stationery** > **Message Card**.
5. Select the image position.

   Select Menu at the upper-right to change the type or color of ruled lines.
6. Select the image you want to place.
   - ❏ Design: Select the pattern, and then go to step 11.
   - ❏ Photo: Go to the next step.
7. When a message telling you that loading photos is complete is displayed, select **OK**.

8. Select ⊕.

9. Select the photo you want to print on the select photo screen, and then select **Done**.

   Select **Single View**, and then select ✎ to edit the photo if necessary.

   "Menu Options for Editing Photos" on page 54

10. Select **Next**.

11. Enter the number of copies, and then tap ◇.

Printing a Coloring Book Using Photos

You can print pictures by extracting only the outline of photos or illustrations. This allows you to create unique coloring books.

Note:
Unless they are being used for personal use (at home or other restricted areas), you need permission from the copyright holder when using copyright protected originals to create a coloring book.

1. Load paper in the printer.

   "Loading Paper" on page 35

2. If you want to use a photo on a memory device, insert the device into the SD card slot or the external interface USB port of the printer.

   "Inserting and Removing a Memory Card" on page 43

   "Inserting and Removing an External USB Device" on page 43

3. Select **Various Prints** on the control panel.

4. Select **Coloring Book**.

5. Do one of the following.

   - When you select **Scan an original**: Make the print settings, and then place the original on the scanner glass. Tap ◇.

     "Placing Originals" on page 40

   - When you select **Choose from the memory card**: When a message telling you that loading photos is complete is displayed, select **OK**. Select the photo you want to print, and then select **Next**. Make settings on the **Basic Settings** tab, select **Advanced Settings** tab, and then change the settings as necessary. Select **Basic Settings** tab, and then tap ◇.

Printing Using a Cloud Service

By using Epson Connect service available on the Internet, you can print from your smart phone, tablet PC, or laptop, anytime and practically anywhere. To use this service, you need to register the user and the printer in Epson Connect.

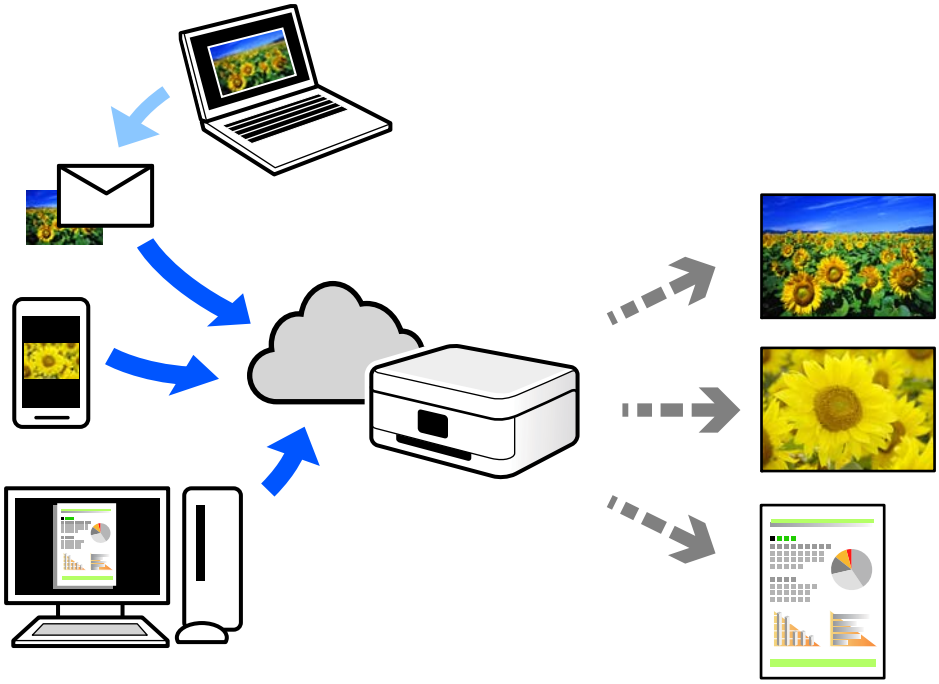

The features available on the Internet are as follows.

❏ Email Print

When you send an email with attachments such as documents or images to an email address assigned to the printer, you can print that email and the attachments from remote locations such as your home or office printer.

❏ Epson iPrint

This Application is for iOS and Android, and allows you to print or scan from a smart phone or tablet. You can print documents, images, and web sites by sending them directly to a printer on the same wireless LAN.

❏ Remote Print Driver

This is a shared driver supported by Remote Print Driver. When printing using a printer in a remote location, you can print by changing the printer on the usual applications window.

See the Epson Connect web portal for details on how to setup or print.

https://www.epsonconnect.com/

http://www.epsonconnect.eu (Europe only)

Registering to Epson Connect Service from the Control Panel

Follow the steps below to register the printer.

1. Select **Settings** on the control panel.

2. Select **Web Service Settings** > **Epson Connect Services** > **Register** > **Start Setup** to print the registration sheet.

3. Follow the instructions on the registration sheet to register the printer.

Copying

Copying Originals. 100

Copying Photos. 105

Copying ID card. 107

Copying Books. 108

Copying Without Margins. 109

Copying on a CD/DVD Label. 110

Copying Originals

This section explains how to use the **Copy** menu on the control panel to copy originals.

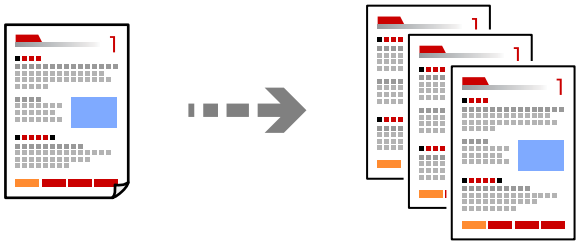

1. Load paper in the printer.

   "Loading Paper" on page 35

2. Place the originals.

   "Placing Originals" on page 40

3. Select **Copy** on the control panel.

4. Select the **Copy** tab, and then select **B&W** or **Color**.

5. Set the number of copies.

6. Tap ◇.

   Note:
   - ❏ *If you select **Preview**, you can check the scanned image.*
   - ❏ *The color, size, and border of the copied image are slightly different from the original.*

Menu Options for Copying

Available items on the **Copy** tab and **Advanced Settings** tab vary depending on the menu you selected.

Preview:

Shows a scanned image to preview the copy results.

B&W:

Copies the original in black and white (monochrome).

Color:

Copies the original in color.

(2-Sided):

- 1→1-Sided

  Copies one side of an original onto a single side of paper.

- 1→2-Sided

  Copies two single-sided originals onto both sides of a single sheet of paper. Select the orientation of your original and the binding position of the paper.

(Density):

Increase the level of density by using + when the copying results are faint. Decrease the level of density by using - when ink smears.

(Reduce/Enlarge):

Configures the magnification ratio of the enlargement or reduction. Select the value and specify the magnification used to enlarge or reduce the original within a range of 25 to 400%.

- Actual Size

  Copies at 100 % magnification.

- Auto Fit Page

  Detects the scan area and automatically enlarges or reduces the original to fit to the paper size you selected. When there are white margins around the original, the white margins from the corner mark of the scanner glass are detected as the scan area, but the margins at the opposite side may be cropped.

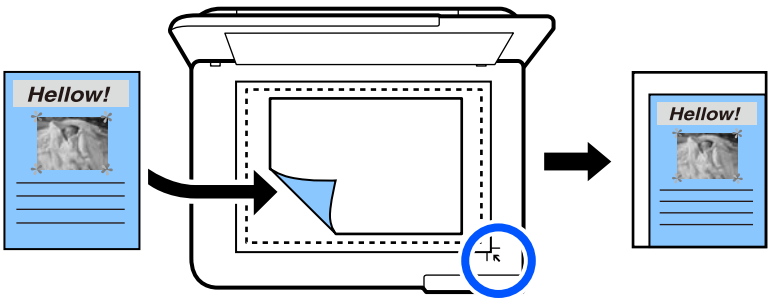

- 10x15cm→A4, A4→10x15cm, and so on

  Automatically enlarges or reduces the original to fit to a specific paper size.

(Paper Setting):

Select the paper source that you want to use. Select to select the paper size and the paper type you loaded.

Multi-Page:

- ❏ Single Page

  Copies a single-sided original onto a single sheet.

- ❏ 2-up

  Copies two single-sided originals onto a single sheet in 2-up layout.

- ❏ Off

  Copies one page of a book onto a single side of paper. This menu is only displayed in the Book Copy menu.

- ❏ 2-up

  Copies two pages of a book onto a single side of paper. This menu is only displayed in the Book Copy menu.

Quality:

Select the quality for copying. Selecting **High** provides higher quality printing, but the printing speed may be slower. If you want to print on plain paper using a much higher quality, select **Best**. Note that the printing speed may slow down considerably.

Remove Background:

Detects the paper color (background color) of the original document, and removes or lightens the color. Depending on the darkness and vividness of the color, it may not be possible to remove or lighten.

Expansion:

With borderless copying, the image is enlarged slightly to remove borders from the edges of the paper. Select how much to enlarge the image.

Clear All Settings:

Select to reset the copy settings to their defaults.

Copying on 2-Sides

Copy multiple originals on both sides of the paper.

1. Load paper in the printer.

   "Loading Paper" on page 35

2. Place the originals.

   "Placing Originals" on page 40

3. Select **Copy** on the control panel.

4. Select (2-Sided) on the **Copy** tab.

5. Select **1→2-Sided**.

6. Specify Original Orientation and Binding Margin, and then select **OK**.

   You can check the finished image on the right-side of screen.

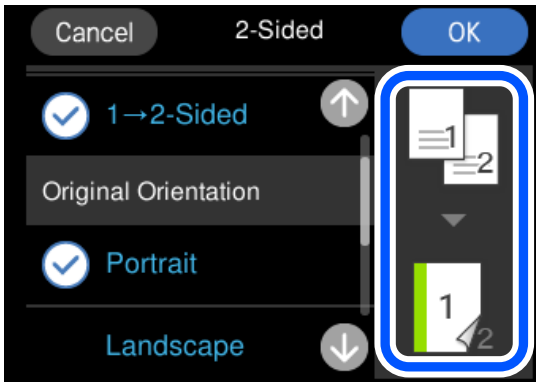

7. Tap .

   Note:
   - *If you select **Preview**, you can check the scanned image.*
   - *The color, size, and border of the copied image are slightly different from the original.*

Copying by Enlarging or Reducing

You can copy originals at a specified magnification.

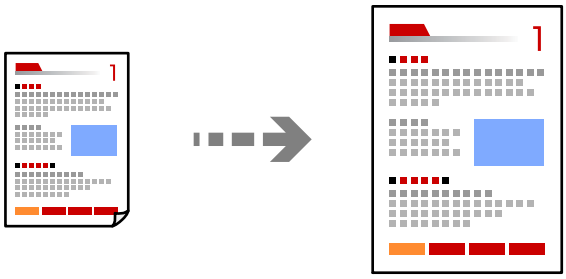

1. Load paper in the printer.

   "Loading Paper" on page 35

2. Place the originals.

   "Placing Originals" on page 40

3. Select **Copy** on the control panel.

4. Select the **Advanced Settings** tab, and then select **Reduce/Enlarge**.

5. Specify the magnification to fit to the original size and the paper size that you set, and then select **OK**.

   If you select **Auto Fit Page**, detects the scan area automatically and enlarges or reduces the original to fit to the paper size you selected.

6. Select the **Copy** tab.

7. Tap ◇.

   Note:
   - ❏ *If you select **Preview**, you can check the scanned image.*
   - ❏ *The color, size, and border of the copied image are slightly different from the original.*

Copying Multiple Originals onto One Sheet

Copies two single-sided originals onto a single sheet in 2-up layout.

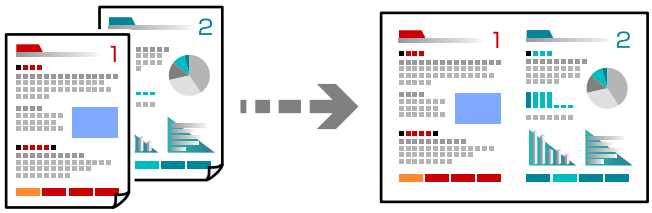

1. Load paper in the printer.

   "Loading Paper" on page 35

2. Place the originals.

   "Placing Originals" on page 40

3. Select **Copy** on the control panel.

4. Select the **Advanced Settings** tab, and then select **Multi-Page**.

5. Select **2-up**.

6. Specify Original Orientation and Original Size, and then select **OK**.

   You can check the finished image on the right-side of screen.

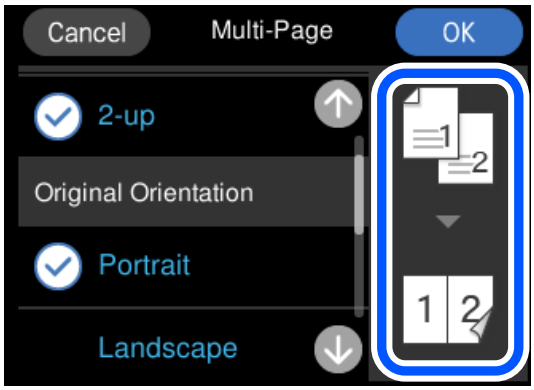

7. Select the **Copy** tab.

8. Tap ◇.

   Note:
   - ❏ *If you select **Preview**, you can check the scanned image.*
   - ❏ *The color, size, and border of the copied image are slightly different from the original.*

Copying Photos

You can copy photos easily. You can also restore the color of faded photos.

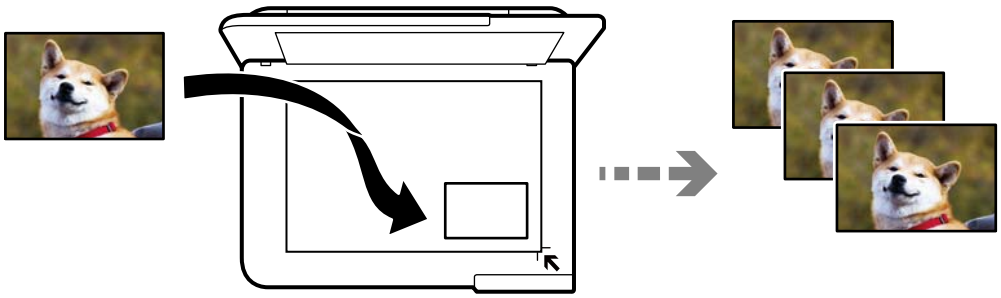

The smallest size of original you can copy is 30 x 40 mm.

Note:
The white space around the photo may not be detected.

1. Load paper in the printer.

   "Loading Paper" on page 35

2. Select **Various Prints** on the control panel.

3. Select **Various copies** > **Copy/Restore Photos**.

4. Change the print settings as necessary, and then select **To Placing Originals**.

   "Menu Options for Paper and Print Settings When Copying Photos" on page 106

5. Place the original face-down and slide it to the corner mark.

   Place the photos 5 mm away from the corner mark of the scanner glass. You can place multiple photos and photos of different sizes.

   When placing multiple photos, leave a gap of at least 5 mm between the photos.

Maximum size: 10×15 cm (4×6 in.)

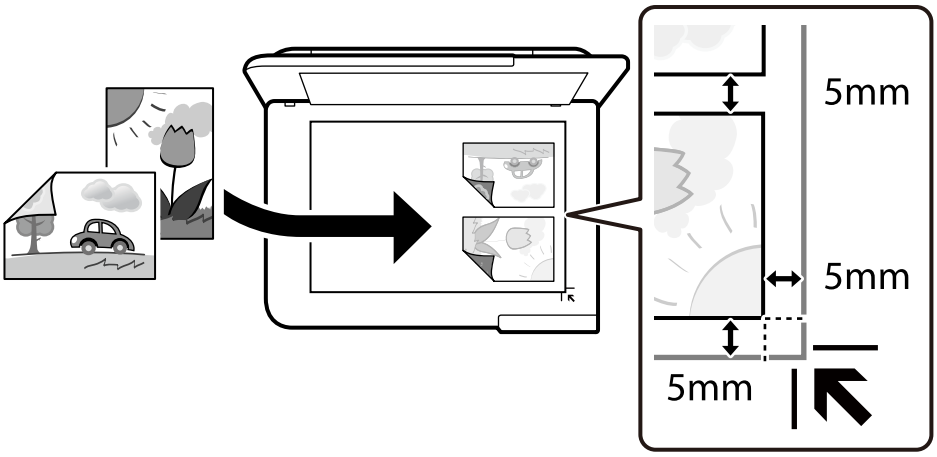

6. Select **Start Scanning**.

   The photos are scanned and displayed on the screen.

7. Select **Edit** if necessary to make settings such as photo adjustments.

   Note:
   If you want to print by enlarging part of a photo, select ***Crop/Zoom****, and then make settings. Slide the print area frame to the left, right, top and bottom, and then change the frame size using ● on the corners of the frame.*

   "Menu Options for Photo Adjustments When Copying Photos" on page 107

8. Tap ◇.

   Note:
   The color, size, and border of the copied image are slightly different from the original.

Menu Options for Paper and Print Settings When Copying Photos

Restore Color:

Restores the color of faded photos.

Paper Setting:

Select the paper source that you want to use. Select ⊖ to select the paper size and the paper type you loaded.

Border Setting:

- ❏ Borderless

  Copies without margins around the edges. The image is enlarged a little to remove margins from the edges of the paper. Select how much to enlarge in the Expansion setting.

- ❏ With Border

  Copies with margins around the edges.

Clear All Settings:

Select to reset the copy settings to their defaults.

Menu Options for Photo Adjustments When Copying Photos

Photo Adjustments:

Selecting **PhotoEnhance** produces sharper images and more vivid colors by automatically adjusting the contrast, saturation, and brightness of the original image data.

Filter:

Copies in monochrome.

Crop/Zoom:

Enlarges a part of the photo to be copied.

Clear Edit.:

Clear photo edit.

Copying ID card

Scans both sides of an ID card and copies onto one side of A4 size paper.

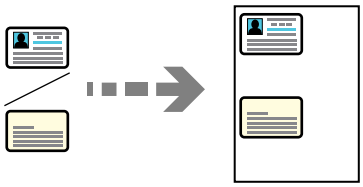

1. Load paper in the printer.

   "Loading Paper" on page 35

2. Place the original face-down and slide it to the corner mark.

   Place an ID card 5 mm away from the corner mark of the scanner glass.

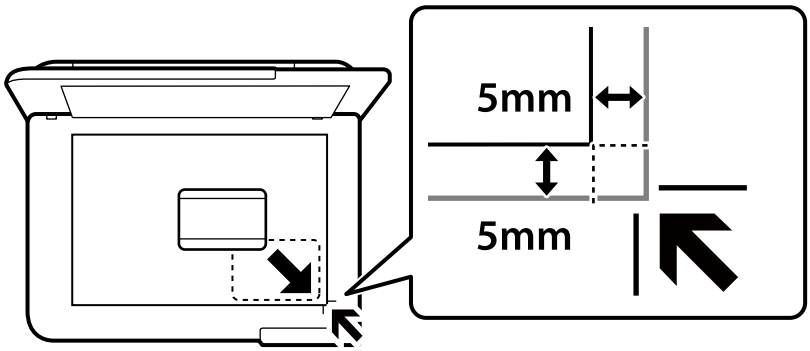

3. Select **Various Prints** on the control panel.

4. Select **Various copies** > **ID Card**.

5. Specify the paper source and paper size, and then select **OK**.

6. Select the **Copy** tab.

7. Tap ◇.

   Note:
   *If you tap **Preview**, you can check the scanned image.*

8. Follow the on-screen instructions to place the back of the original, and then tap **Start Scanning**.

   Place an ID card 5 mm away from the corner mark of the scanner glass.

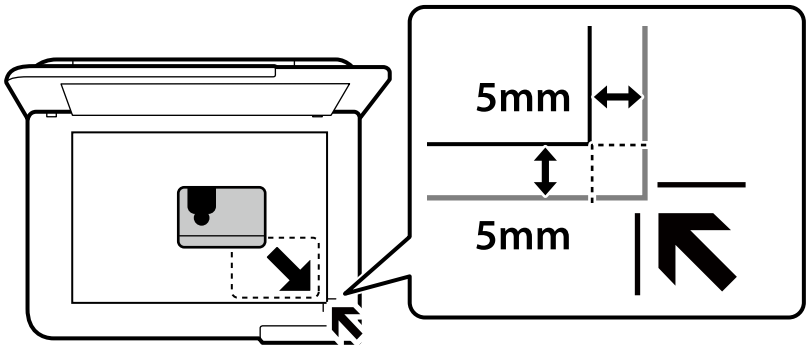

Note:
The color, size, and border of the copied image are slightly different from the original.

Copying Books

Copies two A4 facing pages of a book and so on onto a single sheet of paper.

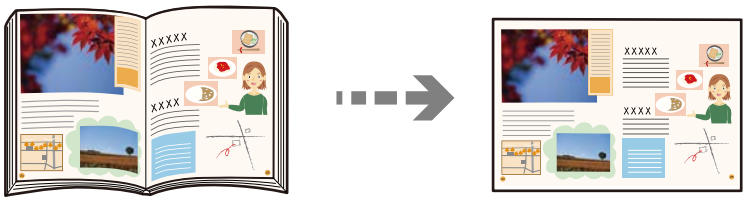

1. Load paper in the printer.

   "Loading Paper" on page 35

2. Select **Various Prints** on the control panel.

3. Select **Various copies** > **Book Copy**.

4. Place the originals.

   Follow the on-screen instructions to place the first page of the original, and then tap **Print Settings**.

5. Select the **Advanced Settings** tab, and then change the settings as necessary.

   If you select **2-up** in **Multi-Page**, you can print two facing pages of a book onto a single side of paper.

6. Select the **Copy** tab.

7. Tap ⟐.

   Note:
   *If you tap **Preview**, you can check the scanned image.*

8. Follow the on-screen instructions to place the second page of the original, and then tap **Start Scanning**.

   Note:
   The color, size, and border of the copied image are slightly different from the original.

Copying Without Margins

Copies without margins around the edges. The image is enlarged a little to remove margins from the edges of the paper.

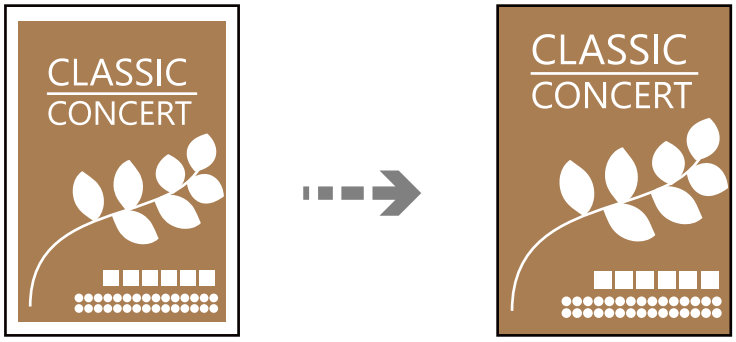

1. Load paper in the printer.

   "Loading Paper" on page 35

2. Place the originals.

   "Placing Originals" on page 40

3. Select **Various Prints** on the control panel.

4. Select **Various copies** > **Borderless Copy**.

5. Select the **Copy** tab.

6. Tap ⟐.

   Note:
   - *If you select **Preview**, you can check the scanned image.*
   - *The color, size, and border of the copied image are slightly different from the original.*

Copying on a CD/DVD Label

You can copy a disc label or a square original such as a photo onto a CD/DVD label.

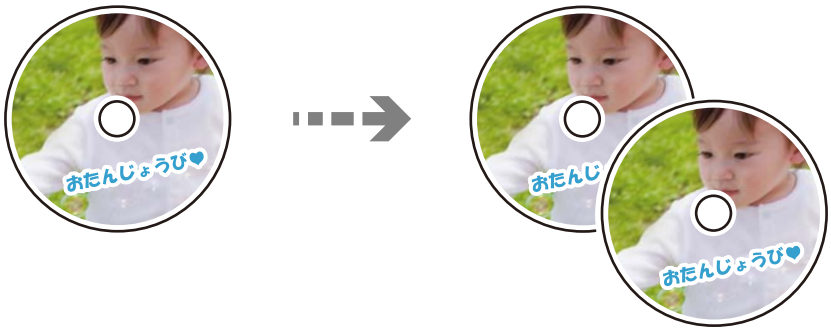

Important:

- *Before printing on the CD/DVD, see the CD/DVD handling precautions.*
  "CD/DVD Handling Precautions" on page 37
- *Do not insert the CD/DVD tray while the printer is operating. This may damage the printer.*
- *Do not insert the CD/DVD tray until you are instructed to do so. Otherwise, an error occurs and the CD/DVD is ejected.*

1. Select **Various Prints** on the control panel.
2. Select **Copy to CD/DVD** > **Copy to CD/DVD**.
3. Place the original following the instructions displayed on the screen, and then select **Proceed to set up Outer/Inner.**.

   If the CD/DVD is not placed exactly in the center, the positioning is automatically adjusted.
4. Specify the inner diameter and the outer diameter using , and then select **Select Type**.

   You can also select within the frame of the inner diameter and outer diameter, and then enter the value using the on-screen keypad.

   Note:
   - *You can set 114 to 120 mm as the outer diameter, and 18 to 46 mm as the inner diameter in 1 mm increments.*
   - *The outer diameter and the inner diameter you set are restored to their defaults after printing the disc label. You need to set these diameters every time you print.*

   "Menu Options for Copying to a Disc label" on page 112
5. Select **Print on CD/DVD**.

   Note:
   *To make a test print, select **Test print on A4 paper**, and then load A4 plain paper in the paper cassette. You can check the printout image before printing on a CD/DVD label.*

6. When the message is displayed on the screen telling you to load a CD/DVD, select **How To**, and then follow the on-screen instructions to load a CD/DVD.

> ***Important:***
>
> *Place a CD/DVD on the CD/DVD tray with the printable side facing up. Press the center of the CD/DVD to securely set it on the CD/DVD tray. Otherwise, the CD/DVD may fall off the tray. Turn over the tray to check that the CD/DVD is firmly secured in the tray.*
>
> 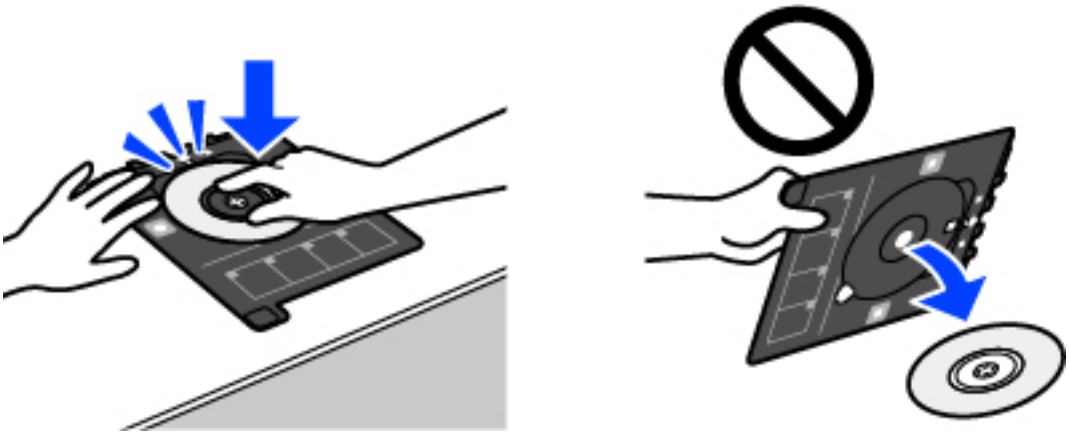

Note:
You may feel slight friction when inserting the tray into the printer. This is normal and you should continue to insert it horizontally.

7. Select **Installed**.

8. Select the **Print on CD/DVD** tab, select color copy or monochrome copy, and then change the copy density as necessary.

   Note:

   Select *to view the scanned image. You can adjust the printing position on the preview screen.*

   "Menu Options for Copying to a Disc label" on page 112

9. Select the **Advanced Settings** tab, and then change the settings as necessary.

   "Menu Options for Copying to a Disc label" on page 112

10. Select the **Print on CD/DVD** tab, and then tap ⟐.

11. When printing has finished, the CD/DVD tray is ejected. Remove the tray from the printer, and then follow the on-screen instructions to select **Printing Complete**.

> ***Important:***
>
> *After printing is finished, make sure you remove the CD/DVD tray. If you do not remove the tray and turn the printer on or off, or run head cleaning, the CD/DVD tray will strike the print head and may cause the printer to malfunction.*

12. Remove the CD/DVD and store the CD/DVD tray on the bottom of the paper cassette 2.

Menu Options for Copying to a Disc label

Inner, Outer:

Specify the print range. Up to 120 mm for the outer diameter, and a minimum of 18 mm for the inner diameter can be specified. Depending on the setting, the CD/DVD or CD/DVD tray may get dirty. Set the range to fit the printable area of your CD/DVD.

Print on CD/DVD, Test print on A4 paper:

Select whether to print on a CD/DVD or make a test print on A4 size plain paper. When you select **Test print on A4 paper** you can check the print result before printing on a CD/DVD.

(Print position adjustment):

Start scanning the original and displays the scanned image. You can adjust the printing position on the preview screen.

Color:

Copies the original in color.

B&W:

Copies the original in black and white (monochrome).

(Density):

Increase the level of density by using + when the copying results are faint. Decrease the level of density by using - when ink smears.

Quality:

Select the quality for copying. Selecting **High** provides higher quality printing, but the printing speed may be slower. If you want to print on plain paper using a much higher quality, select **Best**. Note that the printing speed may slow down considerably.

Clear All Settings:

Select to reset the copy settings to their defaults.

Scanning

Basic Information on Scanning. 114

Scanning Originals to a Memory Device. 117

Scanning Originals to a Computer. 119

Scanning Originals to the Cloud. 121

Scanning Originals Using WSD. 123

Scanning Originals to a Smart Device. 125

Advanced Scanning. 125

Basic Information on Scanning

What is a "Scan"?

A "scan" is the process of converting the optical information on paper (such as documents, magazine clippings, photos, and handwritten illustrations) into digital image data.

You can save scanned data as a digital image such as a JPEG or PDF.

You can then print the image, send it by email, or share the image in other ways.

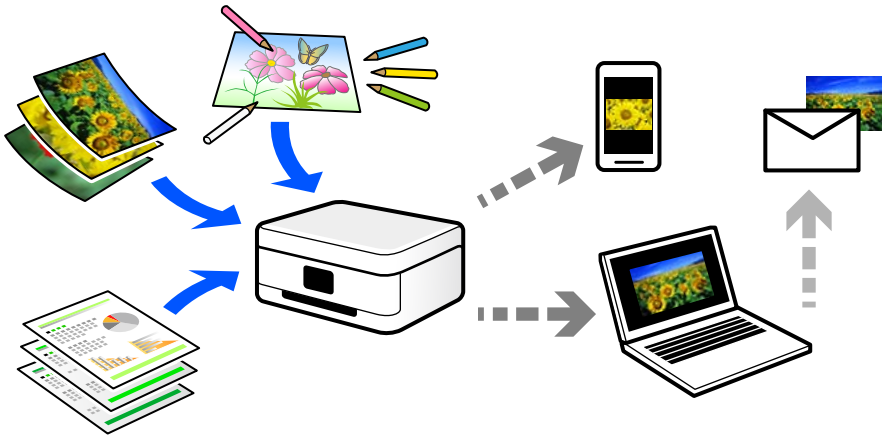

Scanning Uses

You can use scanning in a variety of ways to make your life more convenient.

- ❑ By scanning a paper document and turning it into digital data, you can read it on a computer or a smart device.
- ❑ By scanning tickets or flyers into digital data, you can dispose of the originals and reduce clutter.
- ❑ By scanning important documents, you can back them up to cloud services or another storage medium, just in case they get lost.
- ❑ You can send the scanned photos or documents to friends by email.
- ❑ By scanning hand-drawn illustrations and so on, you can share them on social media at a much higher quality than by just taking a photo on your smart device.
- ❑ By scanning your favorite pages from newspapers or magazines, you can save them and dispose of the originals.

Available Scanning Methods

You can use any of the following methods to scan using this printer.

Related Information

➡ "Scanning to a Memory Device" on page 115

➡ "Scanning to a Computer" on page 115

➡ "Scanning to a Cloud Service" on page 116

➡ "Scanning Using WSD" on page 116

➡ "Scanning Directly from Smart Devices" on page 116

Scanning to a Memory Device

You can save scanned images directly to a memory device inserted into the printer.

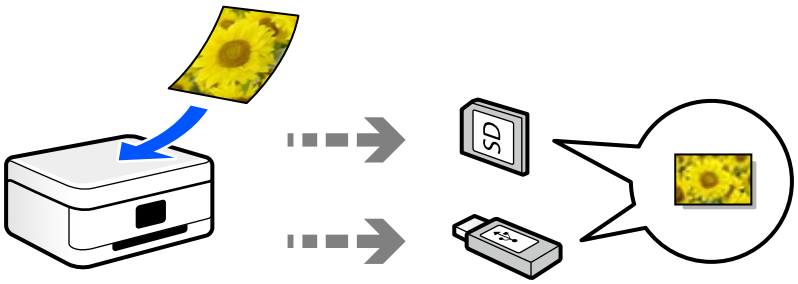

Related Information

➡ "Memory Device Specifications" on page 279

Scanning to a Computer

There are two methods of scanning originals to a computer; scanning using the printer's control panel, and scanning from the computer.

You can scan easily from the control panel.

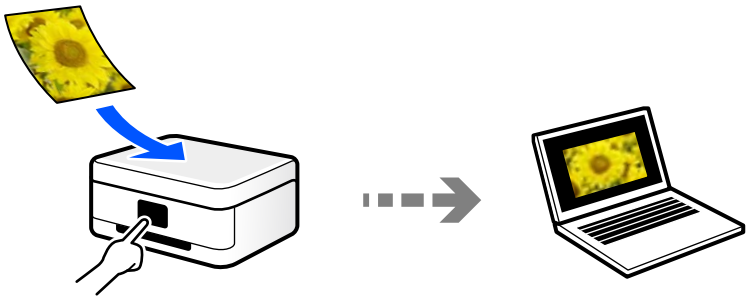

Use the scanning application Epson ScanSmart to scan from the computer. You can edit images after scanning.

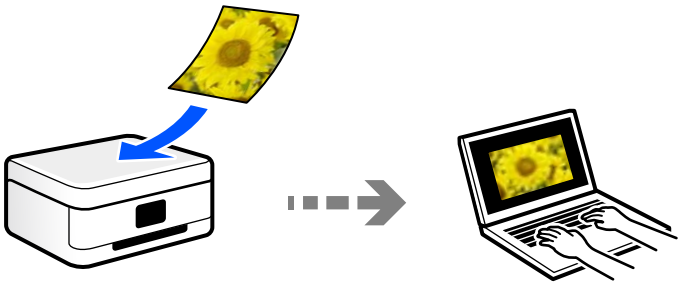

Scanning to a Cloud Service

You can send scanned images from the printer's control panel to cloud services that have been registered in advance.

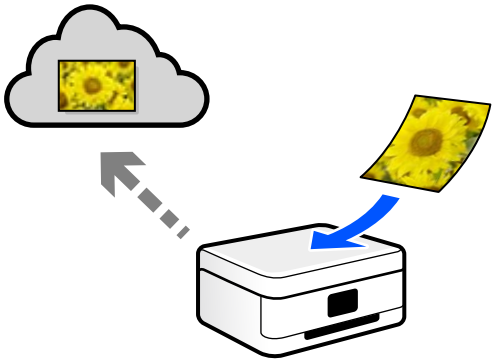

Scanning Using WSD

You can save the scanned image to a computer connected to the printer, using WSD feature.

If you are using the Windows 7/Windows Vista, you need to make WSD settings on your computer before scanning.

Scanning Directly from Smart Devices

You can save scanned images directly to a smart device such as a smart phone or tablet by using the Epson Smart Panel application on the smart device.

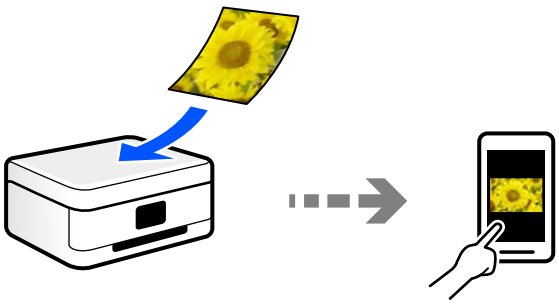

Recommended File Formats

Generally speaking, the JPEG format is suitable for photos while the PDF format is suitable for documents.

See the following descriptions to choose the best format for what you want to do.

File Format	Description
JPEG (.jpg)	A file format that allows you to compress the data to be saved. If the compression ratio is high, the image quality declines, and you cannot convert the image back to the original quality. This is the standard image format for digital cameras. This format is suitable for images that have many colors.

File Format	Description
PDF (.pdf)	A general file format that can be used across different operating systems and provides the same level of screen display and print result. You can view PDF files using dedicated PDF reading software or in web browsers.

Recommended Resolutions

Resolution indicates the number of pixels (smallest area of an image) for each inch (25.4 mm), and is measured in dpi (dots per inch). The advantage of increasing the resolution is that the details in the image improve. However, it can also have the following disadvantages.

❏ The file size becomes large

(When you double the resolution, the file size becomes about four times larger.)

❏ Scanning, saving, and reading the image takes a long time

❏ The image becomes too large to fit the display or print on the paper

See the table and set the appropriate resolution for the purpose of your scanned image.

Purpose	Resolution (Reference)
Displaying on a computer Sending by email	Up to 200 dpi
Printing	200 to 300 dpi

Scanning Originals to a Memory Device

You can save the scanned image to a memory device.

1. Place the originals.

   "Placing Originals" on page 40

2. Insert a memory device into the printer.

   "Inserting and Removing a Memory Card" on page 43

   "Inserting and Removing an External USB Device" on page 43

3. Select **Scan** on the control panel.

4. Select **Memory Device**.

   If you attach multiple memory devices to the printer, select the memory device to which the scanned images are saved.

5. Set items on **Scan** tab, such as the save format.

   "Scan Options for Scanning to a Memory Device" on page 118

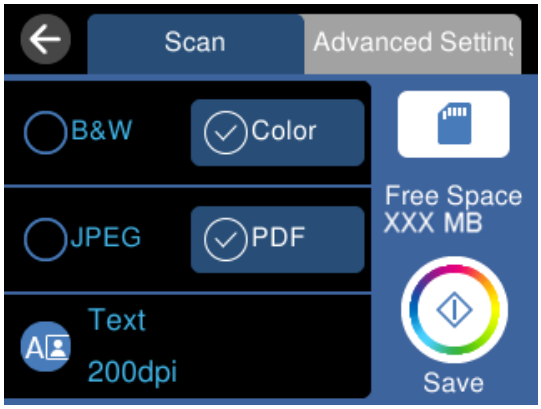

6. Select **Advanced Settings** tab, and then check settings, and change them if necessary.

   "Advanced Options for Scanning to a Memory Device" on page 119

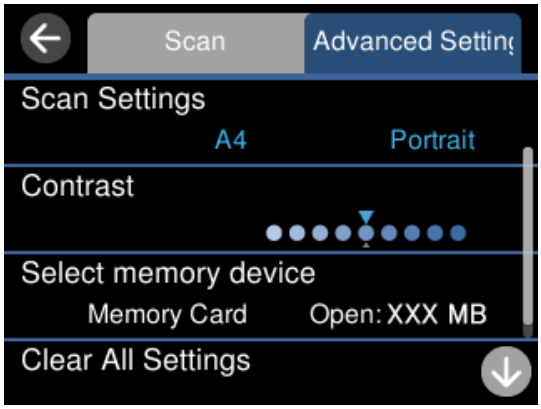

7. Select **Scan** tab again, and then tap ⊡.

Note:

- ❏ *Scanned images are saved in the "001" to "999" folders in "EPSCAN" folder.*
- ❏ *The color, size, and border of the scanned image will not be exactly the same as the original.*

Scan Options for Scanning to a Memory Device

B&W/Color

Select whether to scan in monochrome or in color.

JPEG/PDF

Select the format in which to save the scanned image.

(Quality)

- ❏ Original Type:

  Select the type of your original.

❏ Resolution:

Select the scanning resolution.

Advanced Options for Scanning to a Memory Device

Scan Settings

❏ Scan Size:

Select the scan size. To crop the white space around the text or image when scanning, select **Auto Cropping**. To scan at the maximum area of the scanner glass, select **Max Area**.

❏ Original Orientation:

Select the orientation of the original.

Contrast

Select the contrast of the scanned image.

Select memory device

Select the memory device on which you want to save the scanned image.

Clear All Settings

Resets the scan settings to their defaults.

Scanning Originals to a Computer

There are two methods of scanning originals to a computer; scanning using the printer's control panel, and scanning from the computer.

Related Information

➡ "Scanning from the Control Panel" on page 120

➡ "Scanning from a Computer" on page 121

Scanning from the Control Panel

Note:
To use this feature, make sure the following applications are installed on your computer.

- ❏ *Epson ScanSmart (Windows 7 or later, or OS X El Capitan or later)*
- ❏ *Epson Event Manager (Windows Vista/Windows XP, or OS X Yosemite/OS X Mavericks/OS X Mountain Lion/Mac OS X v10.7.x/Mac OS X v10.6.8)*
- ❏ *Epson Scan 2 (application required to use the scanner feature)*

See the following to check for installed applications.

Windows 10: Click the start button, and then check the ***Epson Software*** *folder >* ***Epson ScanSmart****, and the* ***EPSON*** *folder >* ***Epson Scan 2****.*

Windows 8.1/Windows 8: Enter the application name in the search charm, and then check the displayed icon.

Windows 7: Click the start button, and then select ***All Programs****. Next, check the* ***Epson Software*** *folder >* ***Epson ScanSmart****, and the* ***EPSON*** *folder >* ***Epson Scan 2****.*

Windows Vista/Windows XP: Click the start button, and then select ***All Programs*** *or* ***Programs****. Next, check the* ***Epson Software*** *folder >* ***Epson Event Manager****, and the* ***EPSON*** *folder >* ***Epson Scan 2****.*

Mac OS: Select ***Go*** *>* ***Applications*** *>* ***Epson Software****.*

1. Place the originals.

   "Placing Originals" on page 40

2. Select **Scan** on the control panel.

3. Select **Computer**.

4. Select a computer on which to save the scanned images.
   - ❏ If the **Select Computer** screen is displayed, select the computer from the screen.
   - ❏ If the **Scan to Computer** screen is displayed and the computer is already selected, make sure the selected computer is correct. If you want to change the computer, select , and then select another computer.

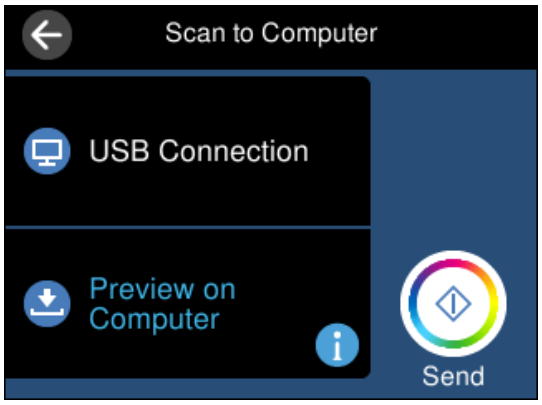

5. Select to select how to save the scanned image to a computer.
   - ❏ Preview on Computer (Windows 7 or later, or OS X El Capitan or later): Previews the scanned image on a computer before saving images.
   - ❏ Save as JPEG: Saves the scanned image in JPEG format.

❏ Save as PDF: Saves the scanned image in PDF format.

6. Tap ⟐.

When using Windows 7 or later, or OS X El Capitan or later: Epson ScanSmart automatically starts on your computer, and scanning starts.

Note:
❏ *See the Epson ScanSmart help for detailed operation information for the software. Click **Help** on the Epson ScanSmart screen to open the help.*

❏ *The color, size, and border of the scanned image will not be exactly the same as the original.*

Scanning from a Computer

You can scan from a computer by using Epson ScanSmart.

This application allows you to scan documents and photos easily, and then save the scanned images in simple steps.

1. Place the originals.

   "Placing Originals" on page 40

2. Start Epson ScanSmart.

   ❏ Windows 10

   Click the start button, and then select **Epson Software** > **Epson ScanSmart**.

   ❏ Windows 8.1/Windows 8

   Enter the application name in the search charm, and then select the displayed icon.

   ❏ Windows 7

   Click the start button, and then select **All Programs** > **Epson Software** > **Epson ScanSmart**.

   ❏ Mac OS

   Select **Go** > **Applications** > **Epson Software** > **Epson ScanSmart**.

3. When the Epson ScanSmart screen is displayed, follow the on-screen instructions to scan.

   Note:
   *Click **Help** to view detailed operation information.*

Scanning Originals to the Cloud

You can send scanned images to cloud services. Before using this feature, make settings using Epson Connect. See the following Epson Connect portal website for details.

https://www.epsonconnect.com/

http://www.epsonconnect.eu (Europe only)

1. Make sure that you have made settings using Epson Connect.

2. Place the original.

   "Placing Originals" on page 40

3. Select **Scan** on the control panel.

4. Select **Cloud**.

5. Select ⊕ on the top of the screen, and then select a destination.

6. Set items on **Scan** tab, such as the save format.

"Scan Options for Scanning to the Cloud" on page 122

7. Select **Advanced Settings** tab, and then check settings, and change them if necessary.

"Advanced Options for Scanning to the Cloud" on page 123

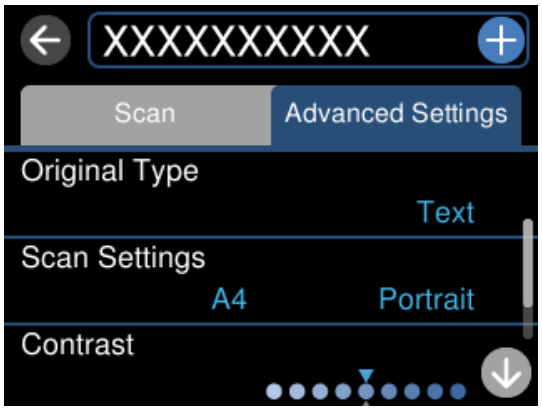

8. Select **Scan** tab again, and then tap ◇.

Note:
The color, size, and border of the scanned image will not be exactly the same as the original.

Scan Options for Scanning to the Cloud

B&W/Color

Select whether to scan in monochrome or in color.

JPEG/PDF

Select the format in which to save the scanned image.

Advanced Options for Scanning to the Cloud

Original Type

Select the type of your original.

Scan Settings

❏ Scan Size:

Select the scan size. To crop the white space around the text or image when scanning, select **Auto Cropping**. To scan at the maximum area of the scanner glass, select **Max Area**.

❏ Original Orientation:

Select the orientation of the original.

Contrast

Select the contrast of the scanned image.

Clear All Settings

Resets the scan settings to their defaults.

Scanning Originals Using WSD

You can save the scanned image to a computer connected to the printer, using WSD feature.

Note:

❏ *This feature is only available for computers running Windows 10/Windows 8.1/Windows 8/Windows 7/Windows Vista (English only).*

❏ *If you are using Windows 7/Windows Vista, you need to setup your computer in advance using this feature.*

1. Place the originals.

   "Placing Originals" on page 40

2. Select **Scan** on the control panel.

3. Select **WSD**.

4. Select a computer.

5. Tap ⊡.

Note:

The color, size, and border of the scanned image will not be exactly the same as the original.

Setting Up a WSD Port

This section explains how to set up a WSD port for Windows 7/Windows Vista.

Note:

For Windows 10/Windows 8.1/Windows 8, the WSD port is set up automatically.

The following is necessary to set up a WSD port.

❏ The printer and the computer are connected to the network.

❏ The printer driver is installed on the computer.

1. Turn the printer on.

2. Click start, and then click **Network** on the computer.

3. Right-click the printer, and then click **Install**.

   Click **Continue** when the **User Account Control** screen is displayed.

   Click **Uninstall** and start again if the **Uninstall** screen is displayed.

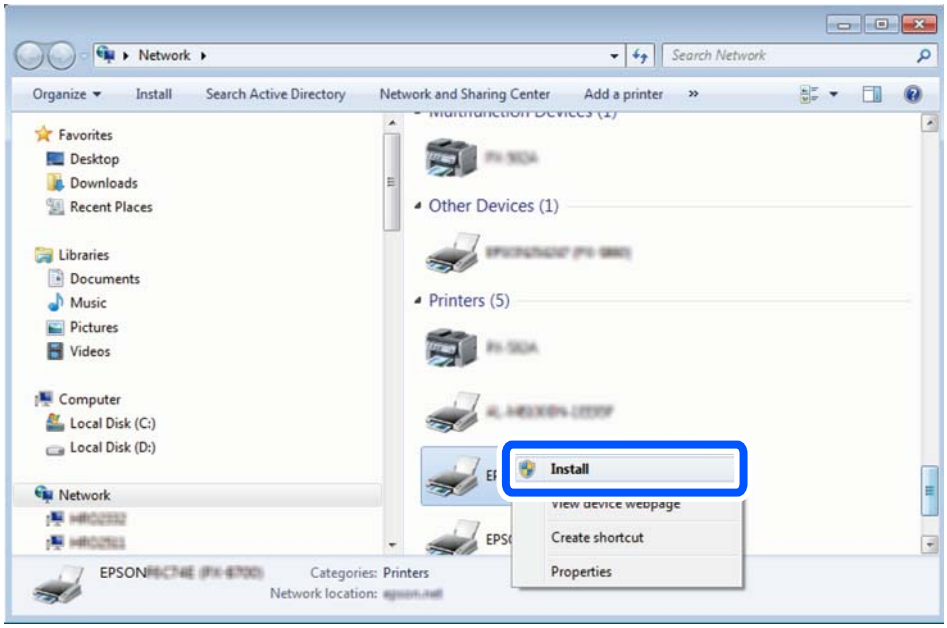

Note:
The printer name you set on the network and model name (EPSON XXXXXX (XX-XXXX)) are displayed on the network screen. You can check the printer's name set on the network from the printer's control panel or by printing a network status sheet.

4. Click **Your device is ready to use**.

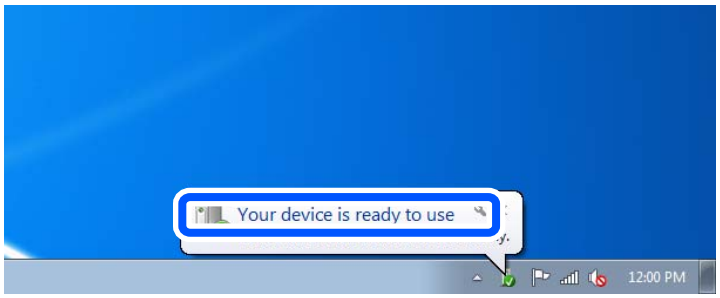

5. Check the message, and then click **Close**.

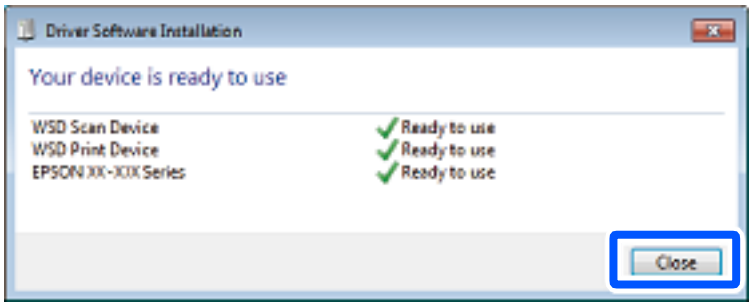

6. Open the **Devices and Printers** screen.
   - ❏ Windows 7
     Click start > **Control Panel** > **Hardware and Sound** (or **Hardware**) > **Devices and Printers**.
   - ❏ Windows Vista
     Click start > **Control Panel** > **Hardware and Sound** > **Printers**.
7. Check that an icon with the printer's name on the network is displayed.
   Select the printer name when using with WSD.

Scanning Originals to a Smart Device

Note:
- ❏ *Before scanning, install Epson Smart Panel on your smart device.*
- ❏ *Epson Smart Panel screens are subject to change without notice.*
- ❏ *Epson Smart Panel contents may vary depending on the product.*

1. Place the originals.
   "Placing Originals" on page 40
2. Start Epson Smart Panel on your smart device.
3. Select scan menu on the home screen.
4. Follow the on-screen instructions to scan and save the images.

Advanced Scanning

Scanning Multiple Photos at the Same Time

Using Epson ScanSmart, you can scan multiple photos at the same time and save each image individually.

1. Place the photos on the scanner glass. Place them 4.5 mm (0.2 in.) away from the horizontal and vertical edges of the scanner glass, and place them at least 20 mm (0.8 in.) away from each other.

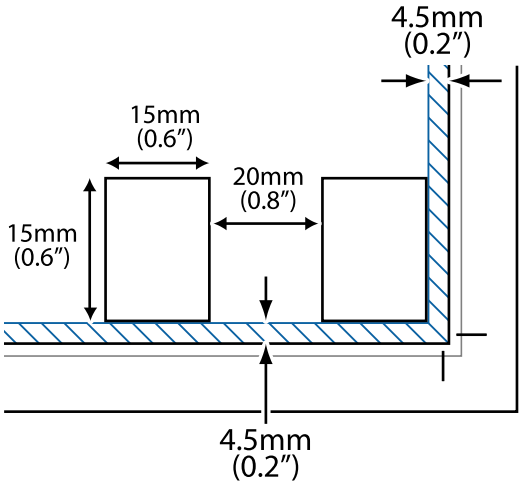

Note:
The photos should be larger than 15×15 mm (0.6×0.6 in.).

2. Start Epson ScanSmart.
   - ❏ Windows 10
     Click the start button, and then select **Epson Software** > **Epson ScanSmart**.
   - ❏ Windows 8.1/Windows 8
     Enter the application name in the search charm, and then select the displayed icon.
   - ❏ Windows 7
     Click the start button, and then select **All Programs** > **Epson Software** > **Epson ScanSmart**.
   - ❏ Mac OS
     Select **Go** > **Applications** > **Epson Software** > **Epson ScanSmart**.
3. When the Epson ScanSmart screen is displayed, follow the on-screen instructions to scan.

Scanned photos are saved as individual images.

Saving and Sharing Data

Sharing Data on a Memory Device. 128

Sharing Data on a Memory Device

From a computer, you can write or read data on a memory device such as a memory card that has been inserted in the printer.

Important:

- *Insert a memory card after removing write protection.*
- *If an image is saved to the memory card from a computer, the image and the number of photos are not refreshed on the LCD screen. Remove and insert the memory card again.*
- *When sharing a memory device inserted in the printer between computers connected by USB or over a network, write access is only allowed to the computers that are connected by the method you selected on the printer.*
  *To write to the memory device, enter **Settings** on the control panel, and then select **File Sharing Setup** and a connection method.*

Note:
It takes a while to recognize data from a computer if a large memory device, such as 2 TB memory device, is connected.

Windows

Select a memory device from **Computer** or **My Computer**. The data on the memory device is displayed.

Note:
*If you connected the printer to the network without the software disc or Web Installer, map a memory card slot or USB port as a network drive. Open **Run** and enter a printer name \\XXXXX or a printer's IP address \\XXX.XXX.XXX.XXX to **Open:**. Right-click a device icon displayed to assign the network. The network drive appears in **Computer** or **My Computer**.*

Mac OS

Select a corresponding device icon. The data on the external storage device is displayed.

Note:

- *To remove a memory device, drag and drop the device icon to the trash icon. Otherwise, data on the shared drive may not be displayed correctly when another memory device is inserted.*
- *To access a memory device through the network, select **Go** > **Connect to Server** from the menu on the desktop. Enter a printer name cifs://XXXXX or smb://XXXXX (Where "XXXXX" is the printer name) in the **Server Address**, and then click **Connect**.*

Related Information

➡ "Memory Device Specifications" on page 279

Maintaining the Printer

Checking the Status of Consumable. 130

Improving Paper Feeding Problems. 130

Improving Print, Copy, and Scan Quality. 133

Cleaning the Printer. 144

Cleaning Spilled ink. 145

Checking the Total Number of Pages Fed Through the Printer. 145

Saving Power. 145

Installing or Uninstalling Applications Separately. 146

Transporting and Storing the Printer. 151

Checking the Status of Consumable

You can check the approximate service life of the maintenance box from the printer's control panel. Select on the home screen.

To confirm the actual ink remaining, visually check the ink levels in all of the printer's tanks.

Important:

Prolonged use of the printer when the ink level is below the lower line could damage the printer.

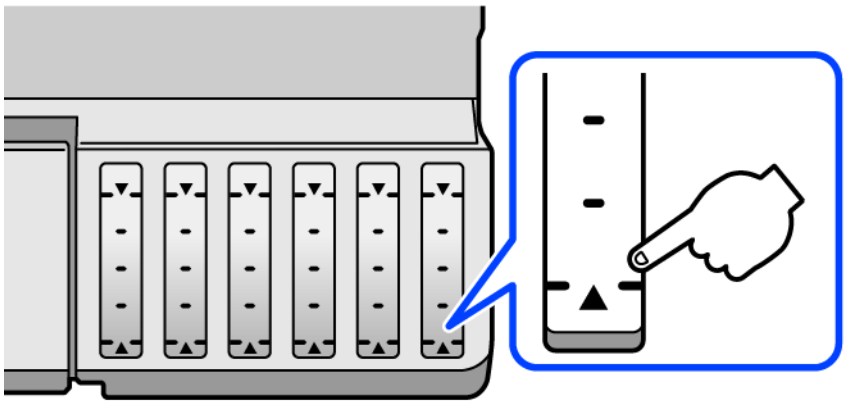

Note:

You can also check the approximate ink levels and the approximate service life of the maintenance box from the status monitor on the printer driver. See the related information link below for details.

Related Information

➡ "Application for Printing from a Computer (Windows Printer Driver)" on page 259
➡ "Guide to Mac OS Printer Driver" on page 261
➡ "It is Time to Refill the Ink" on page 204
➡ "It is Time to Replace the Maintenance Box" on page 209

Improving Paper Feeding Problems

When paper is not fed from paper cassette correctly, clean the roller inside.

1. Turn off the printer by pressing the button.
2. Unplug the power cord, and then disconnect the power cord.
3. Disconnect the USB cable, and then remove the memory card and external USB device.

4. Make sure that the ink tank cap is securely closed.

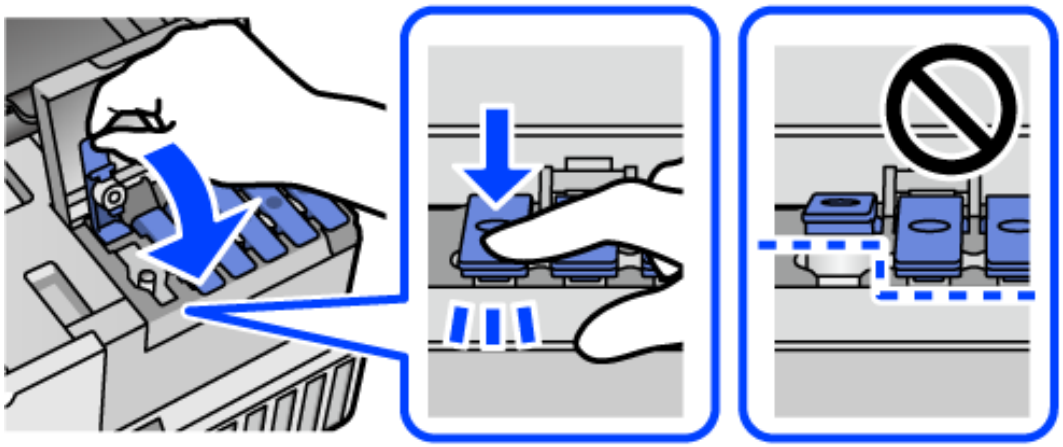

> ***Important:***
> *If the ink tank cap is not securely closed, ink may leak.*

5. Close the scanner unit.

6. Slide out the paper cassette , and then remove the paper.

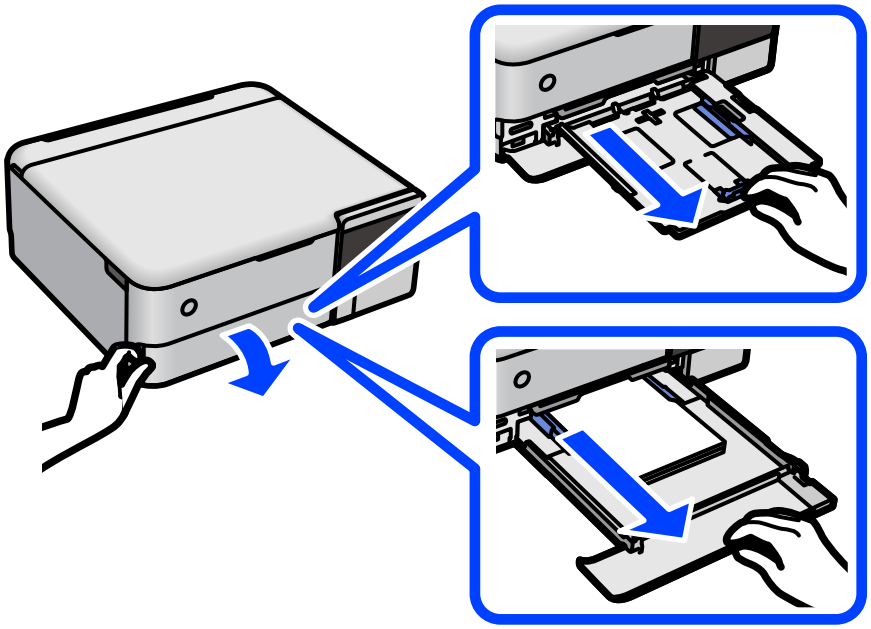

7. Stand the printer on its side with the printer's ink tank at the bottom.

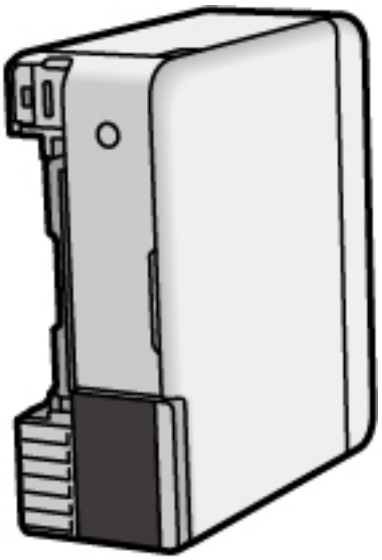

> ***Caution:***
> *Be careful not to trap your hand or fingers when standing the printer. Otherwise you may be injured.*

> ***Important:***
> *Do not leave the printer standing for a long time.*

8. Dampen a soft cloth with water, wring it out thoroughly, and then wipe the roller while rotating it with the cloth.

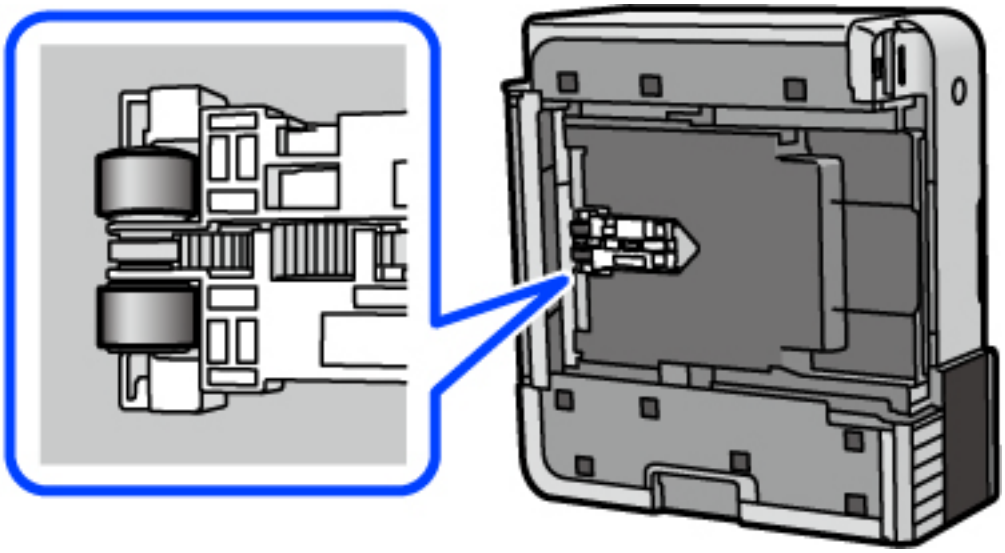

9. Return the printer to its normal position, and then insert the paper cassette.

10. Connect the power cord.

Improving Print, Copy, and Scan Quality

Checking and Cleaning the Print Head

If the nozzles are clogged, the printouts become faint, there is visible banding, or unexpected colors appear. If the nozzles are severely clogged, a blank sheet will be printed. When print quality has declined, first use the nozzle check feature to check if the nozzles are clogged. If the nozzles are clogged, clean the print head.

Important:

- *Do not open the scanner unit or turn off the printer during head cleaning. If the head cleaning is incomplete, you may not be able to print.*
- *Head cleaning consumes ink and should not be performed more than necessary.*
- *When ink is low, you may not be able to clean the print head.*
- *If print quality has not improved after repeating nozzle check and head cleaning 3 times, wait for at least 12 hours without printing, and then run the nozzle check again and repeat the head cleaning if necessary. We recommend turning off the printer by using the ⏻ button. If print quality has still not improved, run Power Cleaning.*
- *To prevent the print head from drying out, do not unplug the printer while the power is on.*

1. Select **Maintenance** on the printer's control panel.
2. Select **Print Head Nozzle Check**.
3. Follow the on-screen instructions to load paper and print the nozzle check pattern.
4. Check the printed pattern to see if the print head nozzles are clogged.

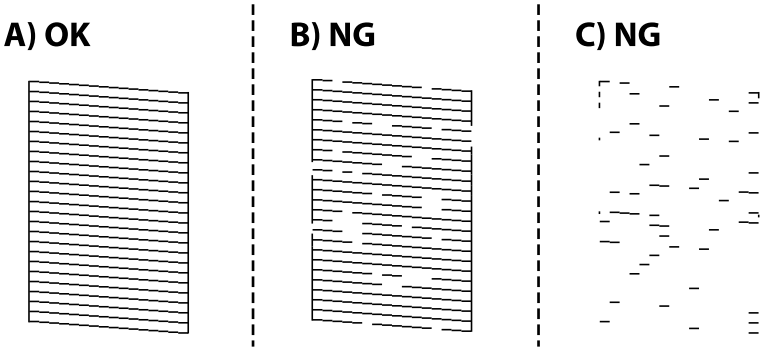

- A:

  All lines are printed. Select ○. No further steps are needed.

- B or close to B

  Some nozzles are clogged. Select ✕, and then follow the on-screen instructions to clean the print head.

- C or close to C

  If most lines are missing or not printed, this indicates most nozzles are clogged. Select ○ to exit the nozzle check feature, and then run Power Cleaning. For details, see "Related information" below.

5. When cleaning is finished, print the nozzle check pattern again. Repeat cleaning and printing the pattern until all lines are printed completely.

> ***Important:***
> *If print quality has not improved after repeating nozzle check and head cleaning 3 times, wait for at least 12 hours without printing, and then run the nozzle check again and repeat the head cleaning if necessary. We recommend turning off the printer by using the ⏻ button. If print quality has still not improved, run Power Cleaning.*

Note:
You can also check and clean the print head from the printer driver. See the related information link below for details.

Related Information

➡ "Application for Printing from a Computer (Windows Printer Driver)" on page 259
➡ "Guide to Mac OS Printer Driver" on page 261
➡ "Running Power Cleaning" on page 134

Running Power Cleaning

The **Power Cleaning** utility allows you to replace all of the ink inside the ink tubes. In the following situations, you may need to use this feature to improve the print quality.

❏ You printed or performed head cleaning when the ink levels were too low to be seen in the ink tank windows.

❏ You performed the nozzle check and head cleaning 3 times and then waited for at least 12 hours without printing, but print quality still did not improve.

Before running this feature, read the following instructions.

> ***Important:***
> *Make sure that there is enough ink in the ink tanks.*
>
> *Visually check all ink tanks are at least a third full. Low ink levels during Power Cleaning could damage the product.*

> ***Important:***
> *An interval of 12 hours is required between each Power Cleaning.*
>
> *Normally, a single Power Cleaning should resolve the print quality issue within 12 hours. Therefore, to avoid unnecessary ink usage, you must wait 12 hours before you try it again.*

> ***Important:***
> *Maintenance box replacement may be required.*
>
> *Ink will be deposited to the maintenance box. If it becomes full, you must prepare and install a replacement maintenance box to continue printing.*

Note:
When the ink levels or the free space in the maintenance box are insufficient for Power Cleaning, you cannot run this feature. Even in this case, the levels and the free space for printing may remain.

1. Select **Maintenance** on the printer's control panel.
2. Select **Power Cleaning**.
3. Follow the on-screen instructions to run the Power Cleaning feature.

   Note:
   If you cannot run this feature, solve the problems that are displayed on the screen. Next, follow this procedure from step 1 to run this feature again.

4. After running this feature, run the nozzle check to make sure the nozzles are not clogged.

   For details on how to run the nozzle check, see the related information link below.

> ***Important:***
> *If print quality has not improved after running Power Cleaning, wait for at least 12 hours without printing, and then print the nozzle check pattern again. Run Print Head Cleaning or Power Cleaning again depending on the printed pattern. If quality still does not improve, contact Epson support.*

Note:
You can also run power cleaning from the printer driver. See the related information link below for details.

Related Information

➡ "Application for Printing from a Computer (Windows Printer Driver)" on page 259
➡ "Guide to Mac OS Printer Driver" on page 261
➡ "Checking and Cleaning the Print Head" on page 133

Preventing nozzle clogging

Always use the power button when turning the printer on and off.

Check that the power light is off before you disconnect the power cord.

The ink itself can dry out if it is not covered. Just like placing a cap on a fountain pen or an oil pen to prevent it from drying, make sure the print head is capped properly to prevent the ink from drying.

When the power cord is unplugged or a power outage occurs while the printer is in operation, the print head may not be capped properly. If the print head is left as it is, it will dry out causing nozzles (ink outlets) to clog.

In these cases, turn the printer on and off again as soon as possible to cap the print head.

Aligning the Print Head

If you notice a misalignment of vertical lines or blurred images, align the print head.

1. Select **Maintenance** on the printer's control panel.
2. Select **Print Head Alignment**.
3. Select one of the alignment menus.
   - ❏ Vertical lines look misaligned or the printouts look blurry : Select **Vertical Alignment**.
   - ❏ Horizontal banding occurs at regular intervals: Select **Horizontal Alignment**.

4. Follow the on-screen instructions to load paper and print the alignment pattern.

Cleaning the Paper Path for Ink Smears (when the Surface of the Print Result is Smeared Vertically)

When the printouts are smeared or scuffed, clean the roller inside.

You need the following items to perform the procedures from step 4.

❏ a slim stick

❏ a well-wrung wet gauze or cloth

1. Select **Maintenance** on the printer's control panel.

2. Select **Paper Guide Cleaning**.

3. Follow the on-screen instructions to clean the paper path.

   Repeat the above procedure until the paper is not smeared with ink. If the paper still gets dirty with ink even after cleaning several times, go to next step.

4. Wrap a well-wrung wet gauze or cloth around the tip of a slim stick.

5. Turn off the printer by pressing the ⏻ button.

6. Unplug the power cord, and then disconnect the power cord.

7. Slide out the output tray.

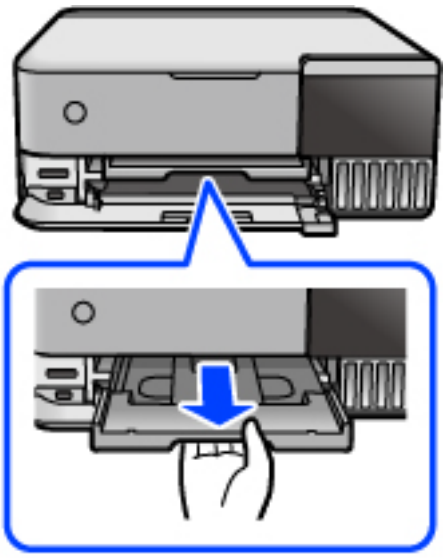

8. Use the stick you prepared in step 4 to wipe the two white rollers by rotating them.

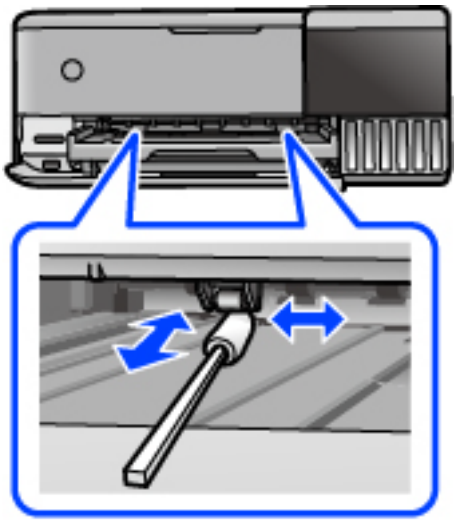

> ***Important:***
> *Do not use tissue paper to clean the inside of the printer. The print head nozzles may be clogged with lint.*

9. Connect the power cord.

Cleaning the Paper Path for Ink Smear (when the Back of the Print Result is Dirty)

1. Turn off the printer by pressing the ⏻ button.

2. Close the document cover if it is open.

3. Open the scanner unit with both hands until it locks.

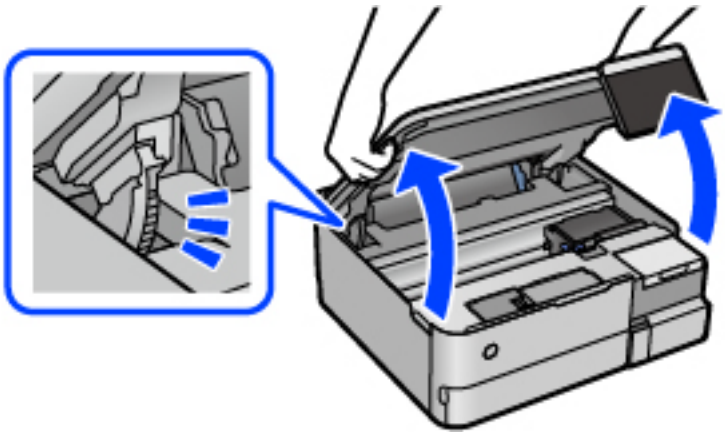

4. Use a cotton swab to wipe off ink from the parts inside the printer that are shown in the following illustration.

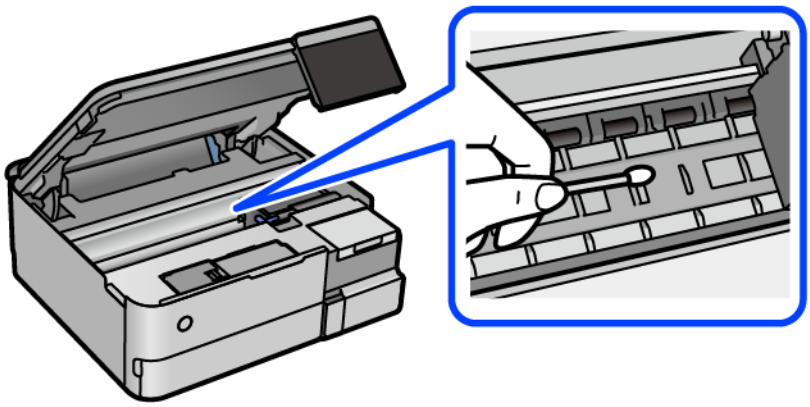

Important:

- *Do not use tissue paper to clean the inside of the printer. The print head nozzles may be clogged with lint.*
- *Do not touch the section shown in the following illustration. Doing so may cause a malfunction.*

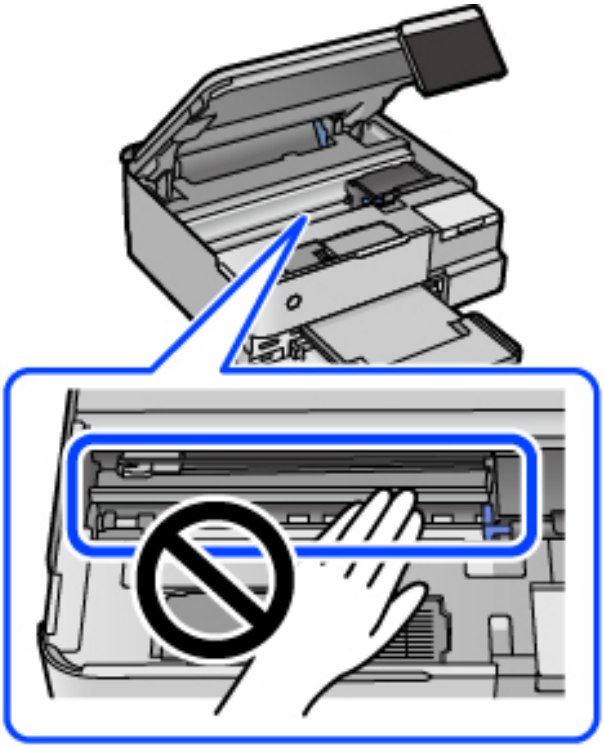

5. Close the scanner unit.

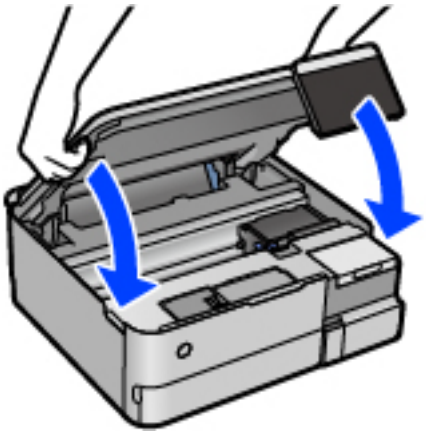

Note:
The scanner unit is designed to close slowly and resist a little as a precaution against catching fingers. Continue to close even if you feel some resistance.

Cleaning the Scanner Glass

When the copies or scanned images are smeared, clean the scanner glass.

> ***Important:***
> *Never use alcohol or thinner to clean the printer. These chemicals can damage the printer.*

1. Open the document cover.

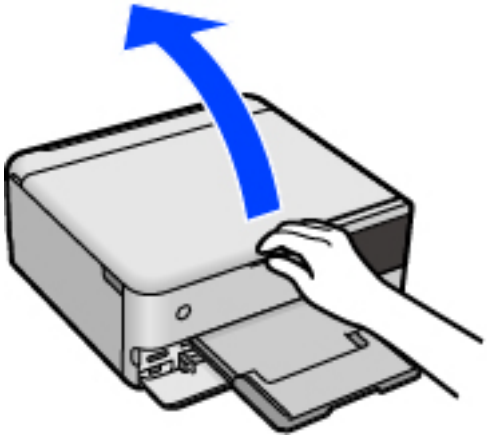

2. Use a soft, dry, clean cloth to clean the scanner glass.

> ***Important:***
> ❏ *If the glass surface is stained with grease or some other hard-to-remove material, use a small amount of glass cleaner and a soft cloth to remove it. Wipe off all remaining liquid.*
> ❏ *Do not press the glass surface too hard.*
> ❏ *Be careful not to scratch or damage the surface of the glass. A damaged glass surface can decrease the scan quality.*

Cleaning the Translucent Film

When the printout is not improved after aligning the print head or cleaning the paper path, the translucent film inside the printer may be smeared.

Items required:

❏ Cotton swabs (several)

❏ Water with a few drops of detergent (2 to 3 drops of detergent in 1/4 cup of tap water)

❏ Light for checking smears

> ***Important:***
> *Do not use cleaning liquid other than water with a few drops of detergent.*

1. Turn off the printer by pressing the ⏻ button.

2. Close the document cover if it is open.

3. Open the scanner unit with both hands until it locks.

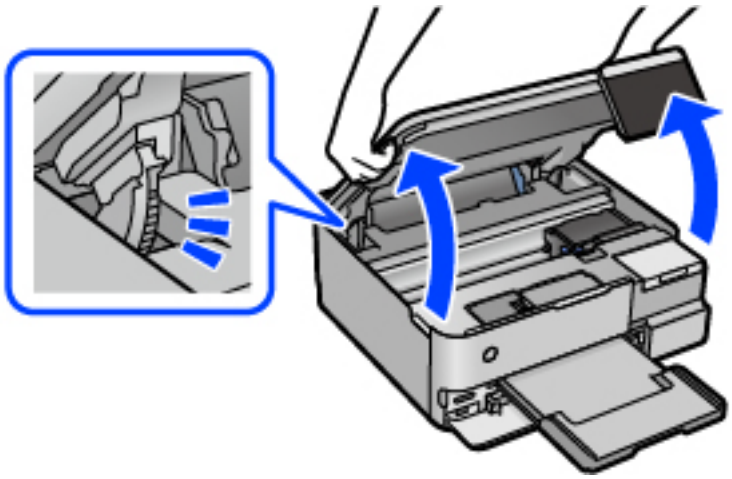

4. Check if the translucent film is smeared. Smears are easier to see if you use a light.

   If there are smears (such as finger marks or grease) on the translucent film (A), go to the next step.

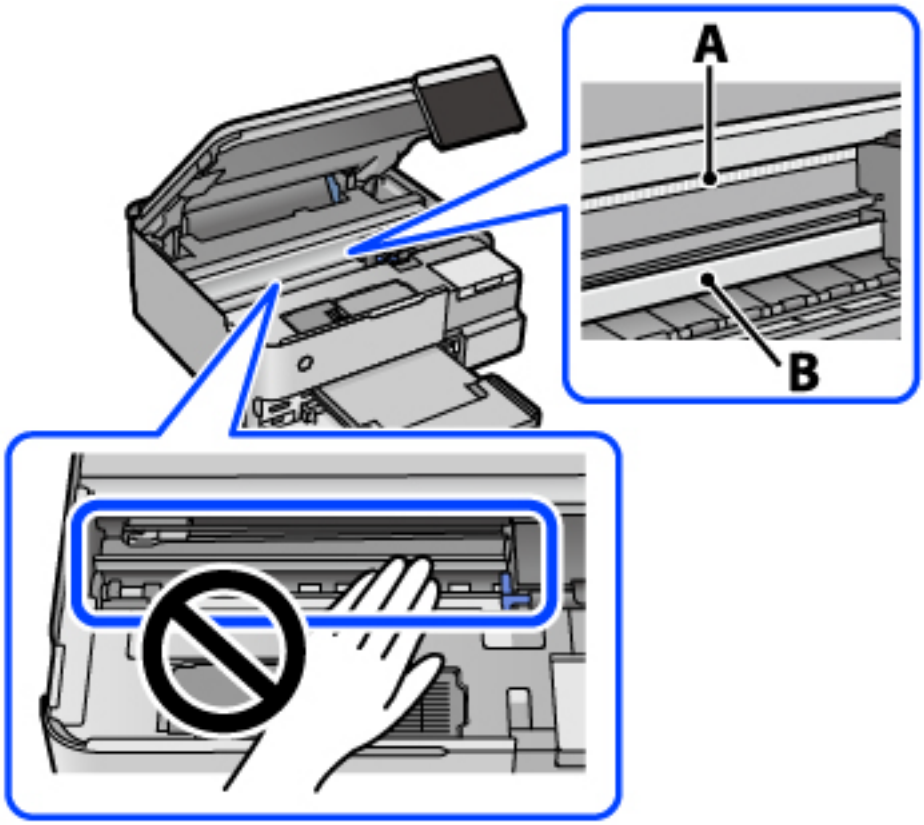

A: Translucent film

B: Rail

> ***Important:***
>
> *Be careful not to touch the rail (B). Otherwise, you may not be able to print. Do not wipe off the grease on the rail, because this is necessary for operations.*

5. Moisten a cotton swab with the water with a few drops of detergent so that it is not dripping water, and then wipe the smeared part.

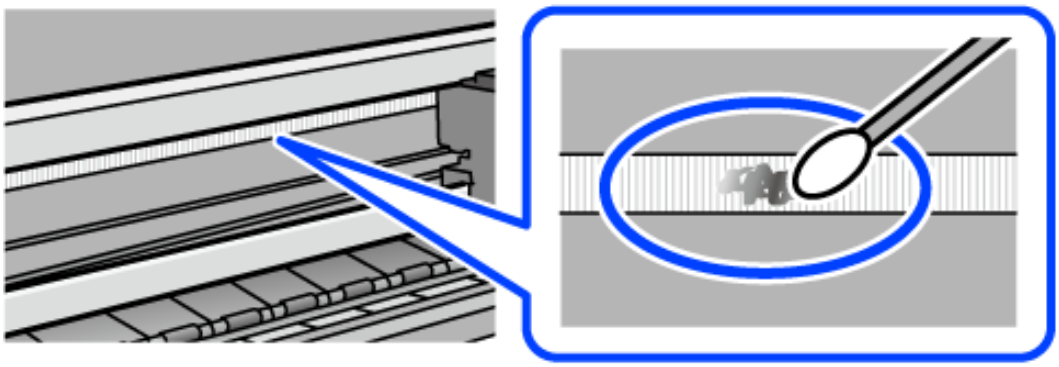

> ***Important:***
> *Wipe off the smear gently. If you press the cotton swab too hard to the film, the springs of the film may be dislocated and the printer may be damaged.*

6. Use a new dry cotton swab to wipe the film.

> ***Important:***
> *Do not leave any fibers on the film.*

Note:
To prevent the smear from spreading, frequently replace the cotton swab with a new one.

7. Repeat steps 5 and 6 until the film is not smeared.

8. Visually check that the film is not smeared.

9. Close the scanner unit.

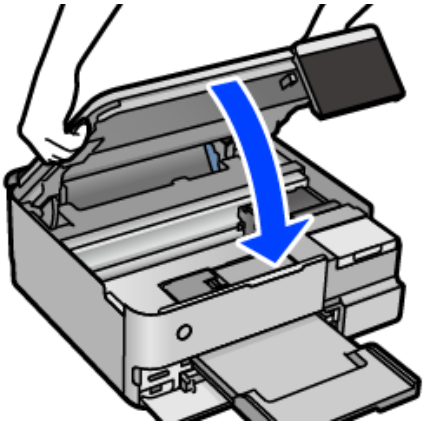

Note:
The scanner unit is designed to close slowly and resist a little as a precaution against catching fingers. Continue to close even if you feel some resistance.

Menu Options for Maintaining the Printer

Select Maintenance on the printer's control panel.

Print Head Nozzle Check:

Select this feature to check if the print head nozzles are clogged. The printer prints a nozzle check pattern.

Print Head Cleaning:

Select this feature to clean clogged nozzles in the print head.

Power Cleaning:

Select this feature to replace all of the ink inside the ink tubes. More ink is consumed than in usual cleaning. See the related information below for details on using this feature.

Print Head Alignment:

Select this feature to adjust the print head to improve print quality.

- ❏ Vertical Alignment

  Select this feature if your printouts look blurry or text and lines are misaligned.

- ❏ Horizontal Alignment

  Select this feature if horizontal banding appears at regular intervals in your printouts.

Fill Ink:

Select this feature to reset the ink level to 100% when filling the ink tank.

Ink Level Setting:

Select this feature to set the ink level according to the actual ink remaining.

Remaining capacity of Maintenance box:

Displays the approximate service life of the maintenance box. When is displayed, the maintenance box is nearly full. When is displayed, the maintenance box is full.

Paper Guide Cleaning:

Select this feature if there are ink stains on the internal rollers. The printer feeds paper to clean the internal rollers.

Related Information

➡ "Checking and Cleaning the Print Head" on page 133

➡ "Running Power Cleaning" on page 134

➡ "Refilling the Ink Tanks" on page 205

➡ "Cleaning the Paper Path for Ink Smears (when the Surface of the Print Result is Smeared Vertically)" on page 136

Cleaning the Printer

If the components and the case are dirty or dusty, turn off the printer and clean them using a soft, clean cloth that has been dampened with water. If you cannot remove the dirt, try adding a small amount of mild detergent to the damp cloth.

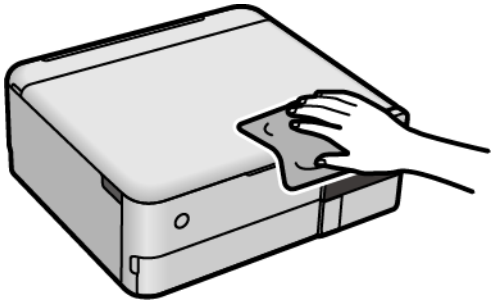

Important:

- *Be careful not to get water onto the printer mechanism or any electrical components. Otherwise, the printer could be damaged.*
- *Never use alcohol or thinner to clean the printer. These chemicals can damage the printer.*
- *Do not touch the parts shown in the following illustration. Doing so may cause a malfunction.*

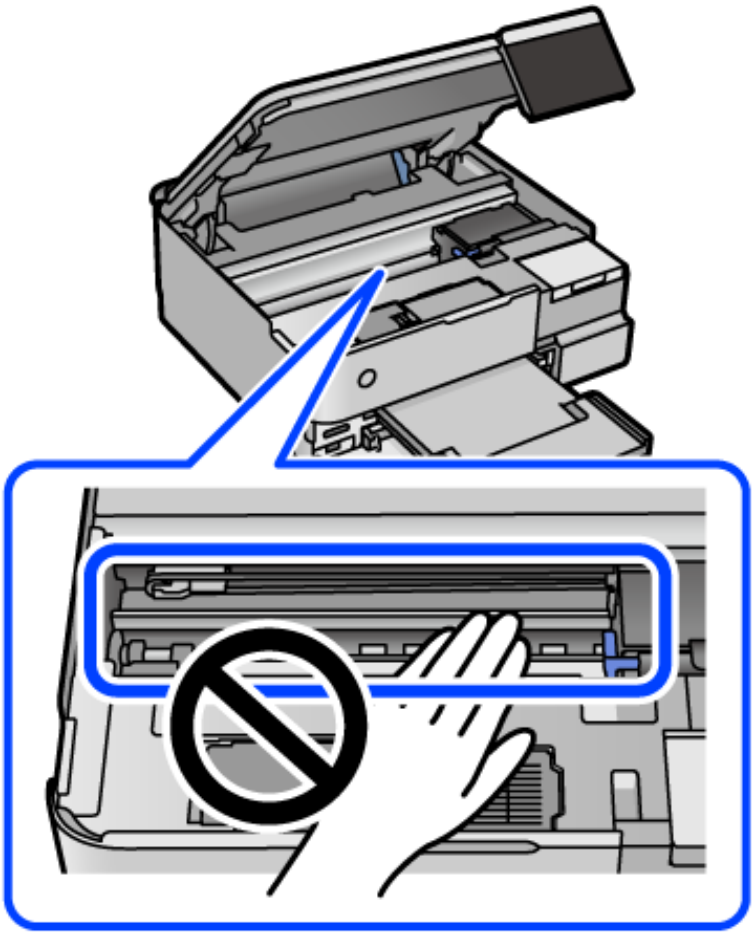

Cleaning Spilled ink

If ink has been spilled, follow these procedures to clean it up.

- ❏ If there is ink residue on the printer, in the area around the tank, wipe it off using a napless, clean cloth or cotton swab.
- ❏ If ink spills on the desk or floor, wipe it off immediately. If the ink dries, it will be difficult to remove. To prevent the spill from spreading, blot the ink with a dry cloth, and then wipe it with a moist cloth.
- ❏ If ink gets on your hands, wash them with water and soap.

Checking the Total Number of Pages Fed Through the Printer

You can check the total number of pages fed through the printer. The information is printed together with the nozzle check pattern.

1. Select **Maintenance** on the printer's control panel.
2. Select **Print Head Nozzle Check**.
3. Follow the on-screen instructions to load paper and print the nozzle check pattern.

Note:
You can also check the total number of pages fed from the printer driver. See the related information link below for details.

Related Information

➡ "Application for Printing from a Computer (Windows Printer Driver)" on page 259
➡ "Guide to Mac OS Printer Driver" on page 261

Saving Power

The printer enters sleep mode or turns off automatically if no operations are performed for a specified period. You can adjust the time before power management is applied. Any increase will affect the product's energy efficiency. Please consider the environment before making any change.

1. Select **Settings** on the home screen.
2. Select **Basic Settings**.
3. Do one of the following.
   - ❏ Select **Sleep Timer** or **Power Off Settings** > **Power Off If Inactive** or **Power Off If Disconnected**.
   - ❏ Select **Sleep Timer** or **Power Off Timer**.

   Note:
   *Your product may have the **Power Off Settings** or **Power Off Timer** feature depending on the location of purchase.*
4. Adjust settings as needed.

Installing or Uninstalling Applications Separately

Connect your computer to the network and install the latest version of applications from the website. Log in to your computer as an administrator. Enter the administrator password if the computer prompts you.

Installing the Applications Separately

Note:

- *When reinstalling an application, you need to uninstall it first.*
- *You can download the latest applications from the Epson website.*

  https://www.epson.com
- *If you use Windows Server operating systems, you cannot use Epson Software Updater. Download the latest applications from the Epson website.*

1. Make sure the printer and the computer are available for communication, and the printer is connected to the Internet.

2. Start Epson Software Updater.

   The screenshot is an example from Windows.

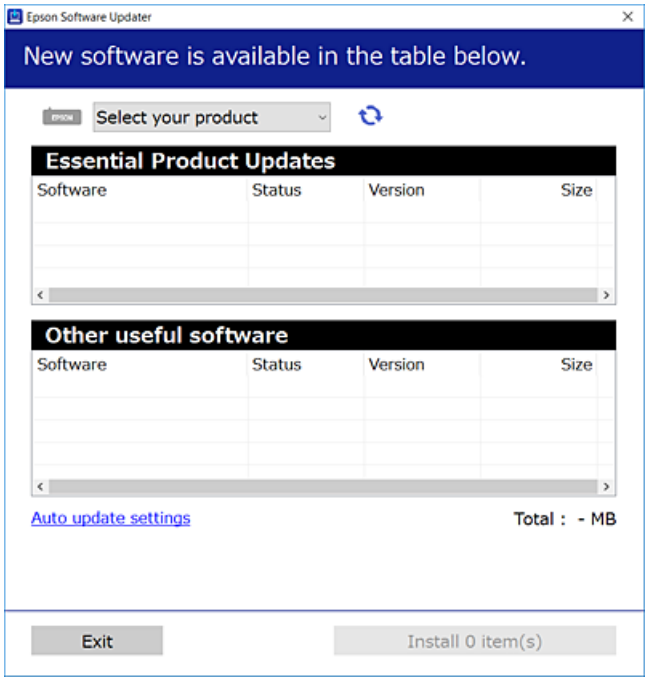

3. For Windows, select your printer, and then click to check for the latest available applications.

4. Select the items you want to install or update, and then click the install button.

> ***Important:***
>
> *Do not turn off or unplug the printer until the update is complete. Doing so may result in malfunction of the printer.*

Related Information

➡ "Application for Updating Software and Firmware (EPSON Software Updater)" on page 267
➡ "Uninstalling Applications" on page 148

Checking if a genuine Epson printer driver is installed - Windows

You can check if a genuine Epson printer driver is installed on your computer by using one of the following methods.

Select **Control Panel** > **View devices and printers** (**Printers**, **Printers and Faxes**), and then do the following to open the print server properties window.

❑ Windows Windows 10/Windows 8.1/Windows 8/Windows 7/Windows Server 2019/Windows Server 2016/Windows Server 2012 R2/Windows Server 2012/Windows Server 2008 R2

Click the printer icon, and then click **Print server properties** at the top of the window.

❑ Windows Vista/Windows Server 2008

Right-click on the **Printers** folder, and then click **Run as administrator** > **Server Properties**.

❑ Windows XP/Windows Server 2003 R2/Windows Server 2003

From the **File** menu, select **Server Properties**.

Click the **Driver** tab. If your printer name is displayed in the list, a genuine Epson printer driver is installed on your computer.

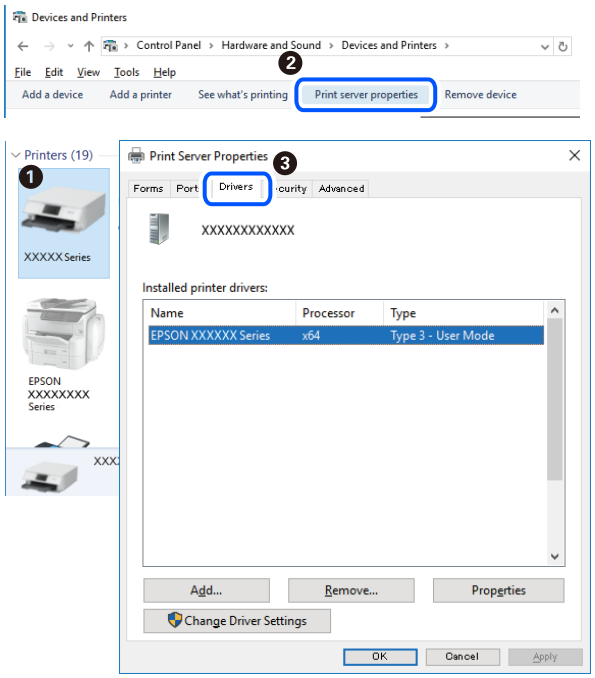

Related Information

➡ "Installing the Applications Separately" on page 146

Checking if a genuine Epson printer driver is installed - Mac OS

You can check if a genuine Epson printer driver is installed on your computer by using one of the following methods.

Select **System Preferences** from the Apple menu > **Printers & Scanners** (or **Print & Scan**, **Print & Fax**), and then select the printer. Click **Options & Supplies**, and if the **Options** tab and **Utility** tab are displayed on the window, a genuine Epson printer driver is installed on your computer.

Related Information

➡ "Installing the Applications Separately" on page 146

Adding the Printer (for Mac OS Only)

1. Select **System Preferences** from the Apple menu > **Printers & Scanners** (or **Print & Scan**, **Print & Fax**).
2. Click +, and then select **Add Other Printer or Scanner**.
3. Select your printer, and then select your printer from the **Use**.
4. Click **Add**.

   Note:
   If your printer is not listed, check that it is correctly connected to the computer and that the printer is on.

Uninstalling Applications

Log in to your computer as an administrator. Enter the administrator password if the computer prompts you.

Uninstalling Applications - Windows

1. Press the ⏻ button to turn off the printer.

2. Quit all running applications.

3. Open **Control Panel**:

   ❏ Windows 10/Windows Server 2019/Windows Server 2016

   Click on the start button, and then select **Windows System** > **Control Panel**.

   ❏ Windows 8.1/Windows 8/Windows Server 2012 R2/Windows Server 2012

   Select **Desktop** > **Settings** > **Control Panel**.

   ❏ Windows 7/Windows Vista/Windows XP/Windows Server 2008 R2/Windows Server 2008/Windows Server 2003 R2/Windows Server 2003

   Click the start button and select **Control Panel**.

4. Open **Uninstall a program** (or **Add or Remove Programs**):

   ❏ Windows 10/Windows 8.1/Windows 8/Windows 7/Windows Vista/Windows Server 2019/Windows Server 2016/Windows Server 2012 R2/Windows Server 2012/Windows Server 2008 R2/Windows Server 2008

   Select **Uninstall a program** in **Programs**.

   ❏ Windows XP/Windows Server 2003 R2/Windows Server 2003

   Click **Add or Remove Programs**.

5. Select the application you want to uninstall.

   You cannot uninstall the printer driver if there is any print jobs. Delete or wait to be printed the jobs before uninstalling.

6. Uninstall the applications:

   ❏ Windows 10/Windows 8.1/Windows 8/Windows 7/Windows Vista/Windows Server 2019/Windows Server 2016/Windows Server 2012 R2/Windows Server 2012/Windows Server 2008 R2/Windows Server 2008

   Click **Uninstall/Change** or **Uninstall**.

   ❏ Windows XP/Windows Server 2003 R2/Windows Server 2003

   Click **Change/Remove** or **Remove**.

   Note:
   *If the **User Account Control** window is displayed, click **Continue**.*

7. Follow the on-screen instructions.

Uninstalling Applications - Mac OS

1. Download the Uninstaller using EPSON Software Updater.

   Once you have downloaded the Uninstaller, you do not need to download it again each time you uninstall the application.

2. Press the ⏻ button to turn off the printer.

3. To uninstall the printer driver, select **System Preferences** from the Apple menu > **Printers & Scanners** (or **Print & Scan**, **Print & Fax**), and then remove the printer from the enabled printers list.

4. Quit all running applications.

5. Select **Go** > **Applications** > **Epson Software** > **Uninstaller**.

6. Select the application you want to uninstall, and then click **Uninstall**.

> ***Important:***
> *The Uninstaller removes all drivers for Epson inkjet printers on the computer. If you use multiple Epson inkjet printers and you only want to delete some drivers, delete all of them first, and then install the necessary printer driver again.*

Note:
*If you cannot find the application you want to uninstall in the application list, you cannot uninstall using the Uninstaller. In this situation, select **Go** > **Applications** > **Epson Software**, select the application you want to uninstall, and then drag it to the trash icon.*

Related Information

➡ "Application for Updating Software and Firmware (EPSON Software Updater)" on page 267

Updating Applications and Firmware

You may be able to clear certain problems and improve or add functions by updating the applications and the firmware. Make sure you use the latest version of the applications and firmware.

1. Make sure that the printer and the computer are connected, and the computer is connected to the internet.

2. Start EPSON Software Updater, and update the applications or the firmware.

> ***Important:***
> *Do not turn off the computer or the printer until the update is complete; otherwise, the printer may malfunction.*

Note:
If you cannot find the application you want to update in the list, you cannot update using the EPSON Software Updater. Check for the latest versions of the applications from your local Epson website.

https://www.epson.com

Related Information

➡ "Application for Updating Software and Firmware (EPSON Software Updater)" on page 267

Updating the Printer's Firmware Using the Control Panel

If the printer can be connected to the Internet, you can update the printer's firmware using the control panel. You can also set the printer to regularly check for firmware updates and notify you if any are available.

Related Information

➡ "Application for Updating Software and Firmware (EPSON Software Updater)" on page 267

Transporting and Storing the Printer

When you need to store the printer or transport it when moving or for repairs, follow the steps below to pack the printer.

1. Turn off the printer by pressing the ⏻ button.
2. Make sure the power light turns off, and then unplug the power cord.

   > ***Important:***
   > *Unplug the power cord when the power light is off. Otherwise, the print head does not return to the home position causing the ink to dry, and printing may become impossible.*

3. Disconnect all cables such as the power cord and USB cable.
4. Remove all of the paper from the printer.
5. Make sure there are no originals on the printer.
6. Open the scanner unit with the document cover closed.

   > ***Caution:***
   > *Be careful not to trap your hand or fingers when opening or closing the scanner unit. Otherwise you may be injured.*

7. Set the transportation lock to the locked (Transport) position.

   The transportation lock stops ink supply to prevent ink leakage when transporting and storing.

If the print head is not in the position shown below, move it by hand.

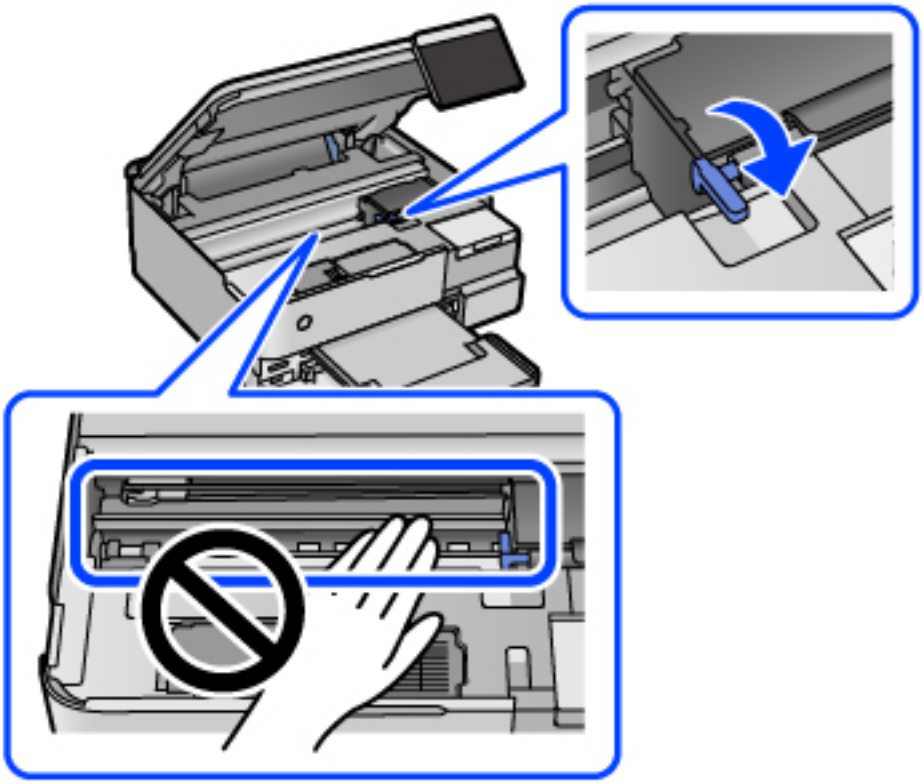

8. Secure the print head to the case with tape.

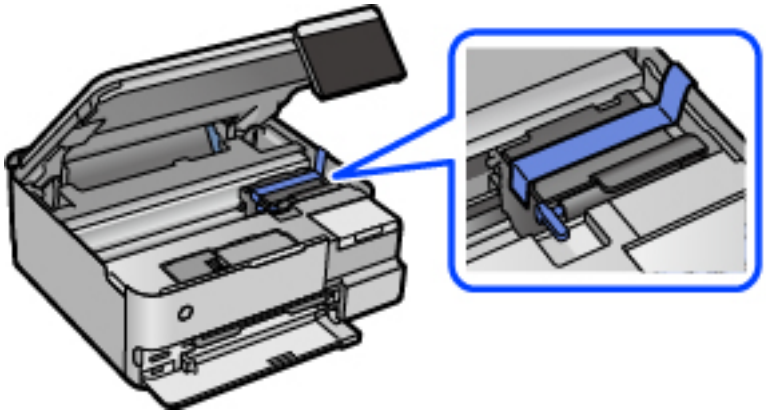

9. Make sure to install the cap onto the ink tank securely.

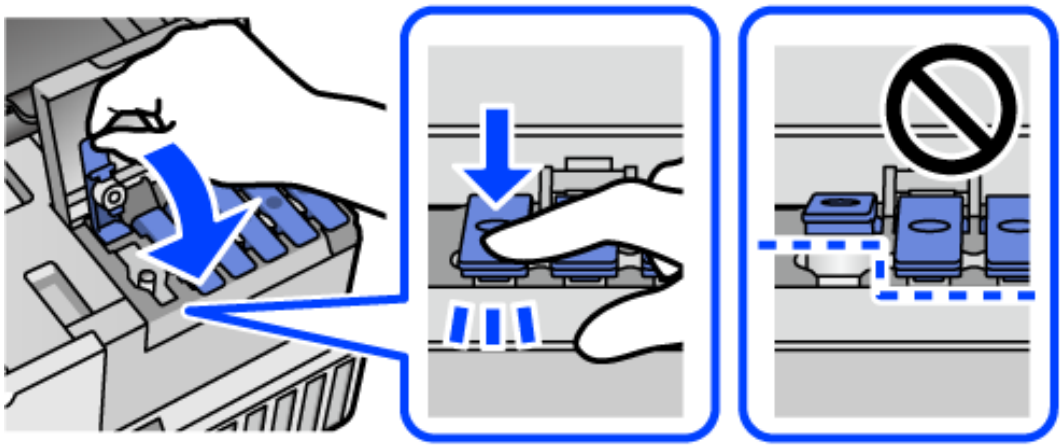

10. Close the ink tank cover securely.

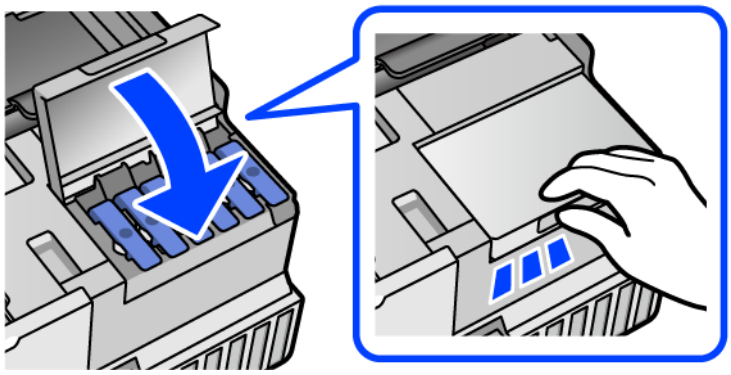

11. Close the scanner unit.

    The scanner unit is designed to close slowly and resist a little as a precaution against catching fingers. Continue to close even if you feel some resistance.

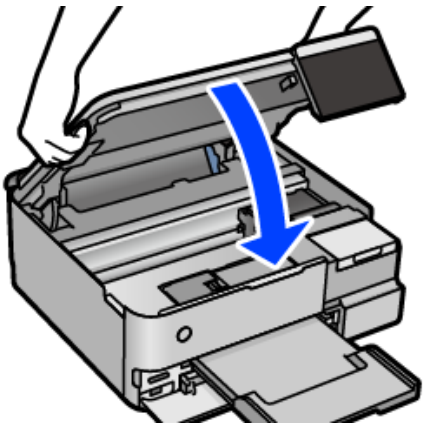

12. Prepare to pack the printer as shown below.

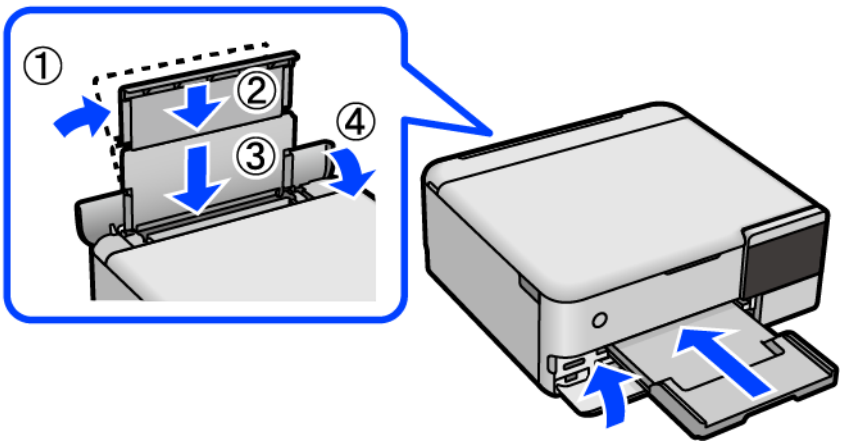

13. Place the printer in the plastic bag supplied for transporting and fold it closed.

14. Pack the printer in its box using the protective materials.

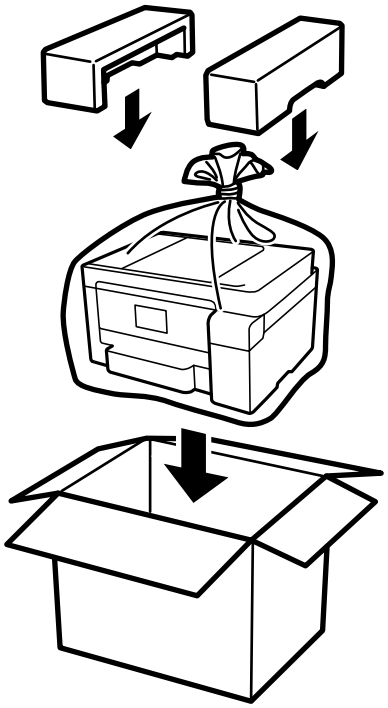

Important:

- *When carrying the printer, lift it using a stable position. Lifting the printer using an unstable position may result in injury.*
- *When lifting the printer, place your hands in the positions shown below. Do not hold printer at the front and back.*

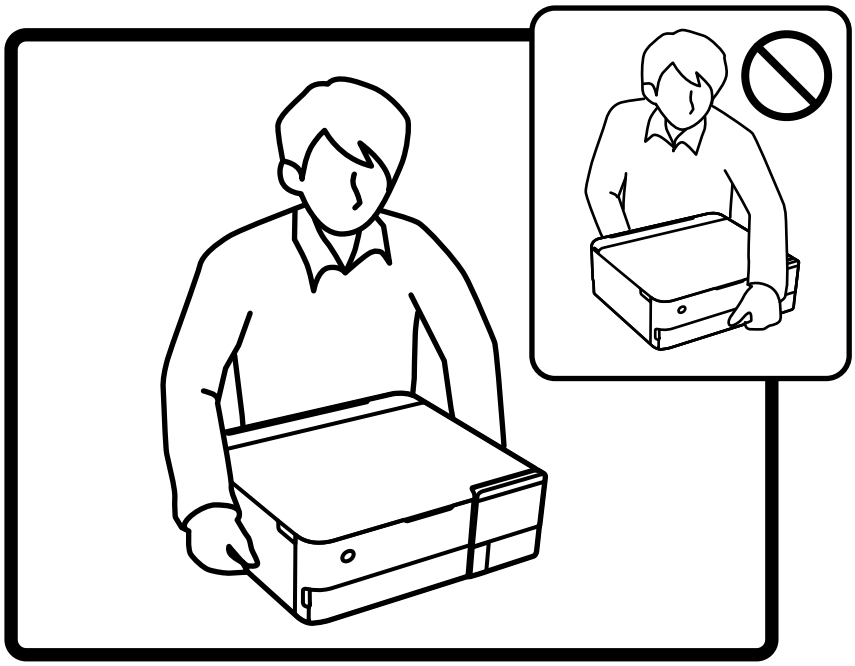

Important:

- *When storing or transporting an ink bottle, do not tilt the bottle and do not subject it to impacts or temperature changes. Otherwise, ink may leak even if the cap on the ink bottle is tightened securely. Be sure to keep the ink bottle upright when tightening the cap, and take precautions to prevent ink from leaking when transporting the bottle, for example, putting the bottle in a bag.*

- *Do not put opened ink bottles in the box with printer.*

The next time you use the printer, make sure you remove the tape securing the print head and set the transportation lock to the unlocked (Print) position. If print quality has declined the next time you print, clean and align the print head.

Related Information

➡ "Checking and Cleaning the Print Head" on page 133

➡ "Aligning the Print Head" on page 135

Solving Problems

The Printer Does Not Work as Expected. 158

A Message is Displayed on the LCD Screen. 195

Paper Gets Jammed. 197

It is Time to Refill the Ink. 204

It is Time to Replace the Maintenance Box. 209

Printing, Copying, and Scanning Quality is Poor. 211

Cannot Solve Problem. 230

The Printer Does Not Work as Expected

The Printer Does Not Turn On or Off

Power Does Not Turn On

One of the following situations may be the cause.

The power cord is not properly plugged into the electrical outlet.

Solutions

Make sure the power cord is securely plugged in.

The ⏻ button was not pressed for long enough.

Solutions

Hold down the ⏻ button for a little longer.

The Printer Does Not Turn On Automatically

Auto Power On is disabled.

Solutions

- ❑ Select **Settings** > **Basic Settings**, and then enable the **Auto Power On** Setting.
- ❑ When connecting using the USB cable, make sure you connect it securely to the printer and the computer.
- ❑ When connecting over a network, make sure the printer's home screen shows that the printer is properly connected to a network.

➡ "Guide to the Network Icon" on page 26

Power Does Not Turn Off

The ⏻ button was not pressed for long enough.

Solutions

Hold down the ⏻ button for a little longer. If you still cannot turn off the printer, unplug the power cord. Then plug the power cord back in and turn the printer back on and off by pressing the ⏻ button, in order avoid drying out the print head.

Paper Does Not Feed Properly

No Paper Feeds

The following causes can be considered.

The installation location is inappropriate.

Solutions

Place the printer on a flat surface and operate in the recommended environmental conditions.

➡ "Environmental Specifications" on page 281

Unsupported paper is being used.

Solutions

Use paper supported by this printer.

➡ "Available Paper and Capacities" on page 253
➡ "Unavailable Paper Types" on page 258

Paper handling is inappropriate.

Solutions

Follow paper handling precautions.

➡ "Paper Handling Precautions" on page 32

Too many sheets are loaded in the printer.

Solutions

Do not load more than the maximum number of sheets specified for the paper.

➡ "Available Paper and Capacities" on page 253

The paper settings on the printer are incorrect.

Solutions

Make sure the paper size and paper type settings match the actual paper size and paper type loaded in the printer.

➡ "Paper Size and Type Settings" on page 33

Paper slips when paper dust adheres to the roller.

Solutions

Clean the roller.

➡ "Improving Paper Feeding Problems" on page 130

Paper Feeds at a Slant

One of the following situations may be the cause.

The installation location is inappropriate.

Solutions

Place the printer on a flat surface and operate in the recommended environmental conditions.

➡ "Environmental Specifications" on page 281

Unsupported paper is being used.

Solutions

Use paper supported by this printer.

➡ "Available Paper and Capacities" on page 253
➡ "Unavailable Paper Types" on page 258

Paper handling is inappropriate.

Solutions

Follow paper handling precautions.

➡ "Paper Handling Precautions" on page 32

The paper is loaded incorrectly.

Solutions

Load paper in the correct direction, and slide the edge guides against the edges of the paper.

➡ "Loading Paper" on page 35

Too many sheets are loaded in the printer.

Solutions

Do not load more than the maximum number of sheets specified for the paper.

➡ "Available Paper and Capacities" on page 253

The paper settings on the printer are incorrect.

Solutions

Make sure the paper size and paper type settings match the actual paper size and paper type loaded in the printer.

➡ "Paper Size and Type Settings" on page 33

Paper slips when paper dust adheres to the roller.

Solutions

Clean the roller.

➡ "Improving Paper Feeding Problems" on page 130

Several Sheets of Paper are Fed at a Time

One of the following situations may be the cause.

The installation location is inappropriate.

Solutions

Place the printer on a flat surface and operate in the recommended environmental conditions.

➡ "Environmental Specifications" on page 281

Unsupported paper is being used.

Solutions

Use paper supported by this printer.

➡ "Available Paper and Capacities" on page 253
➡ "Unavailable Paper Types" on page 258

Paper handling is inappropriate.

Solutions

Follow paper handling precautions.

➡ "Paper Handling Precautions" on page 32

The paper is moist or damp.

Solutions

Load new paper.

Static electricity is causing sheets of paper to stick to each other.

Solutions

Fan the paper before loading. If the paper still does not feed, load one sheet of paper at a time.

Too many sheets are loaded in the printer.

Solutions

Do not load more than the maximum number of sheets specified for the paper.

➡ "Available Paper and Capacities" on page 253

The paper settings on the printer are incorrect.

Solutions

Make sure the paper size and paper type settings match the actual paper size and paper type loaded in the printer.

➡ "Paper Size and Type Settings" on page 33

Paper slips when paper dust adheres to the roller.

Solutions

Clean the roller.

➡ "Improving Paper Feeding Problems" on page 130

Multiple sheets of paper feed at the same time during manual 2-sided printing.

Solutions

Remove any paper that is loaded in the paper source before you reload the paper.

Paper is Ejected During Printing

Letterhead is not selected as the paper type.

Solutions

When you load letterhead paper (paper on which information such as the sender's name or corporation name are pre-printed in the header), select **Letterhead** as the paper type setting.

Cannot Print

Cannot Print from Windows

Make sure the computer and the printer are connected correctly.

The cause and solution to the problem differ depending on whether or not they are connected.

Checking the Connection Status

Use Epson Printer Connection Checker to check the connection status for the computer and the printer. You may be able to solve the problem depending on the results of the check.

1. Double-click the **Epson Printer Connection Checker** icon on the desktop.

   Epson Printer Connection Checker starts.

   If there is no icon on the desktop, follow the methods below to start Epson Printer Connection Checker.

   ❏ Windows 10

   Click the start button, and then select **Epson Software** > **Epson Printer Connection Checker**.

   ❏ Windows 8.1/Windows 8

   Enter the application name in the search charm, and then select the displayed icon.

   ❏ Windows 7

   Click the start button, and then select **All Programs** > **Epson Software** > **Epson Printer Connection Checker**.

2. Follow the on-screen instructions to check.

   Note:
   If the printer name is not displayed, install a genuine Epson printer driver.

   "Checking if a genuine Epson printer driver is installed - Windows" on page 147

When you have identified the problem, follow the solution displayed on the screen.

When you cannot solve the problem, check the following according to your situation.

❏ The printer is not recognized over a network connection

"Cannot connect to a Network" on page 163

❏ The printer is not recognized using a USB connection

"The Printer Cannot Connect by USB (Windows)" on page 165

❏ The printer is recognized, but printing cannot be performed.

"Cannot Print Even Though a Connection has been Established (Windows)" on page 166

Cannot connect to a Network

The problem could be one of the following issues.

Something is wrong with the network devices for Wi-Fi connection.

Solutions

Turn off the devices you want to connect to the network. Wait for about 10 seconds, and then turn on the devices in the following order; wireless router, computer or smart device, and then printer. Move the printer and computer or smart device closer to the wireless router to help with radio wave communication, and then try to make network settings again.

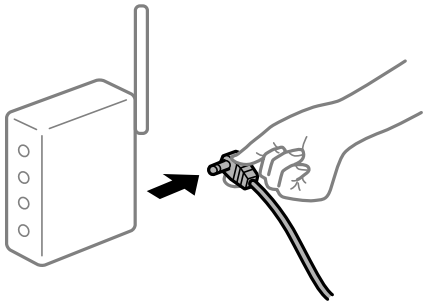

Devices cannot receive signals from the wireless router because they are too far apart.

Solutions

After moving the computer or the smart device and the printer closer to the wireless router, turn off the wireless router, and then turn it back on.

When changing the wireless router, the settings do not match the new router.

Solutions

Reconfigure the settings so that they match the new wireless router.

➡ "When Replacing the Wireless Router" on page 234

The SSIDs connected from the computer or smart device and computer are different.

Solutions

When you are using multiple wireless routers at the same time or the wireless router has multiple SSIDs and devices are connected to different SSIDs, you cannot connect to the wireless router.

Connect the computer or smart device to the same SSID as the printer.

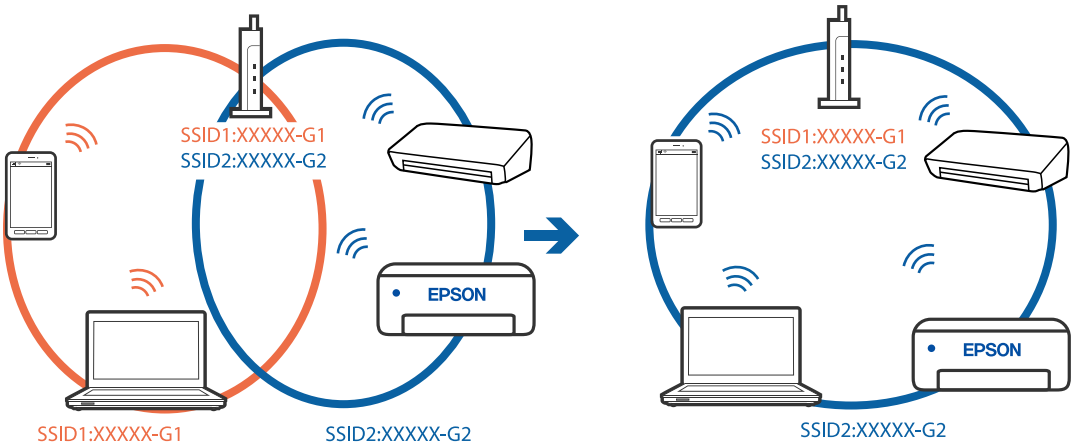

A privacy separator on the wireless router is available.

Solutions

Most wireless routers have a separator function that blocks communication between devices within the same SSID. If you cannot communicate between the printer and the computer or smart device even if they are connected to the same network, disable the separator function on the wireless router. See the manual provided with the wireless router for details.

The IP address is incorrectly assigned.

Solutions

If the IP address assigned to the printer is 169.254.XXX.XXX, and the subnet mask is 255.255.0.0, the IP address may not be assigned correctly.

Select **Settings** > **Network Settings** > **Advanced** on the printer's control panel, and then check the IP address and the subnet mask assigned to the printer.

Restart the wireless router or reset the network settings for the printer.

➡ "Re-setting the Network Connection" on page 234

There is a problem with the network settings on the computer.

Solutions

Try accessing any website from your computer to make sure that your computer's network settings are correct. If you cannot access any website, there is a problem on the computer.

Check the network connection of the computer. See the documentation provided with the computer for details.

The printer has been connected by Ethernet using devices that support IEEE802.3az (Energy Efficient Ethernet).

Solutions

When you connect the printer by Ethernet using devices that support IEEE802.3az (Energy Efficient Ethernet), the following problems may occur depending on the hub or router that you are using.

- ❏ Connection becomes unstable, the printer is connected and disconnected again and again.
- ❏ Cannot connect to the printer.
- ❏ The communication speed becomes slow.

Follow the steps below to disable IEEE802.3az for the printer and then connect.

1. Remove the Ethernet cable connected to the computer and the printer.
2. When IEEE802.3az for the computer is enabled, disable it.
   See the documentation provided with the computer for details.
3. Connect the computer and the printer with an Ethernet cable directly.
4. On the printer, print a network connection report.
   "Printing a Network Connection Report" on page 245
5. Check the printer's IP address on the network connection report.
6. On the computer, access Web Config.
   Launch a Web browser, and then enter the printer's IP address.
   "Application for Configuring Printer Operations (Web Config)" on page 264
7. Select **Advanced Settings** from the list at the top right of the window.
8. Select **Network Settings** > **Wired LAN**.
9. Select **OFF** for **IEEE 802.3az**.
10. Click **Next**.
11. Click **OK**.
12. Remove the Ethernet cable connected to the computer and the printer.
13. If you disabled IEEE802.3az for the computer in step 2, enable it.
14. Connect the Ethernet cables that you removed in step 1 to the computer and the printer.

If the problem still occurs, devices other than the printer may be causing the problem.

The Printer Cannot Connect by USB (Windows)

The following causes can be considered.

The USB cable is not plugged into the electrical outlet correctly.

Solutions

Connect the USB cable securely to the printer and the computer.

There is a problem with the USB hub.

Solutions

If you are using a USB hub, try to connect the printer directly to the computer.

There is a problem with the USB cable or the USB inlet.

Solutions

Connect the USB cable to a different port, or change the USB cable.

Cannot Print Even Though a Connection has been Established (Windows)

One of the following situations may be the cause.

A genuine Epson printer driver has not been installed.

Solutions

If a genuine Epson printer driver (EPSON XXXXX) has not been installed, the available functions are limited. We recommend using a genuine Epson printer driver.

➡ "Checking if a genuine Epson printer driver is installed - Windows" on page 147
➡ "Checking if a genuine Epson printer driver is installed - Mac OS" on page 148

There is a problem with the software or data.

Solutions

- ❑ If you are printing a large size image, the computer may run out of memory. Print the image at a lower resolution or a smaller size.
- ❑ If you have tried all of the solutions and have not solved the problem, try uninstalling and then reinstalling the printer driver

➡ "Installing or Uninstalling Applications Separately" on page 146

There is a problem with the printer's status.

Solutions

Click **EPSON Status Monitor 3** on the printer driver's **Maintenance** tab, and then check the printer status. If **EPSON Status Monitor 3** is disabled, click **Extended Settings** on the **Maintenance** tab, and then select **Enable EPSON Status Monitor 3**.

There is still a job waiting to be printed.

Solutions

Click **Print Queue** on the printer driver's **Maintenance** tab. If unnecessary data remains, select **Cancel all documents** from the **Printer** menu.

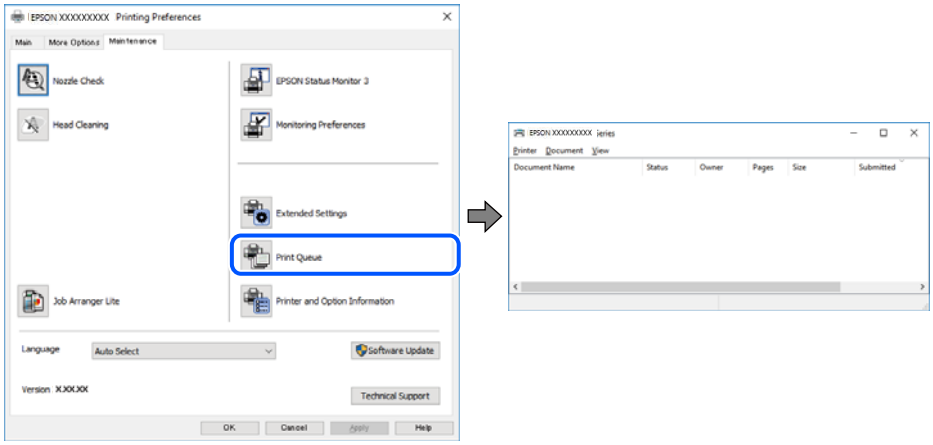

The printer is paused or offline.

Solutions

Click **Print Queue** on the printer driver's **Maintenance** tab.

If the printer is paused or offline, clear the related setting from the **Printer** menu.

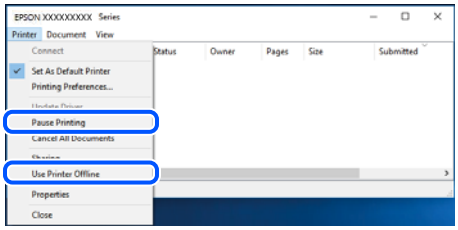

The printer is not selected as the default printer.

Solutions

Right-click the printer icon in **Control Panel** > **View devices and printers** (or **Printers**, or **Printers and Faxes**) and click **Set as default printer**.

Note:
If there are multiple printer icons, select the correct one based on the connection type, as described below.

USB connection: EPSON XXXX Series

Network connection: EPSON XXXX Series (network)

If you install the printer driver multiple times, copies of the printer driver may be created. If copies such as "EPSON XXXX Series (copy 1)" are created, right-click the copied driver icon, and then click **Remove Device**.

The printer port is not set correctly.

Solutions

Click **Print Queue** on the printer driver's **Maintenance** tab.

Make sure the printer port is set correctly as shown below in **Property** > **Port** from the **Printer** menu.

USB connection: **USBXXX**, Network connection: **EpsonNet Print Port**

Suddenly the Printer Cannot Print over a Network Connection

The problem could be one of the following issues.

The network environment has been changed.

Solutions

When you have changed the network environment, such as the wireless router or provider, try making network settings for the printer again.

Connect the computer or smart device to the same SSID as the printer.

➡ "Re-setting the Network Connection" on page 234

Something is wrong with the network devices for Wi-Fi connection.

Solutions

Turn off the devices you want to connect to the network. Wait for about 10 seconds, and then turn on the devices in the following order; wireless router, computer or smart device, and then printer. Move the printer and computer or smart device closer to the wireless router to help with radio wave communication, and then try to make network settings again.

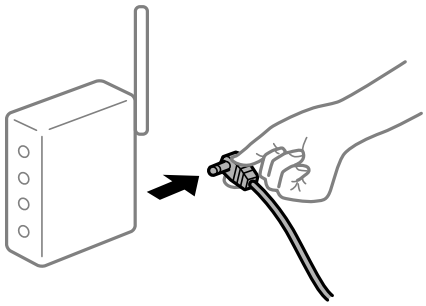

The printer is not connected to the network.

Solutions

Select **Settings** > **Network Settings** > **Connection Check**, and then print the network connection report. If the report shows that the network connection failed, check the network connection report and then follow the printed solutions.

➡ "Printing a Network Connection Report" on page 245

There is a problem with the network settings on the computer.

Solutions

Try accessing any website from your computer to make sure that your computer's network settings are correct. If you cannot access any website, there is a problem on the computer.

Check the network connection of the computer. See the documentation provided with the computer for details.

There is still a job waiting to be printed.

Solutions

Click **Print Queue** on the printer driver's **Maintenance** tab. If unnecessary data remains, select **Cancel all documents** from the **Printer** menu.

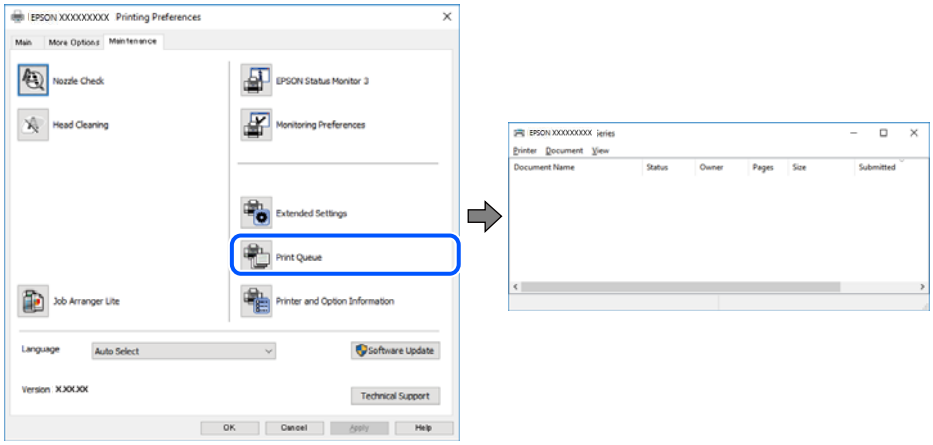

The printer is paused or offline.

Solutions

Click **Print Queue** on the printer driver's **Maintenance** tab.

If the printer is paused or offline, clear the related setting from the **Printer** menu.

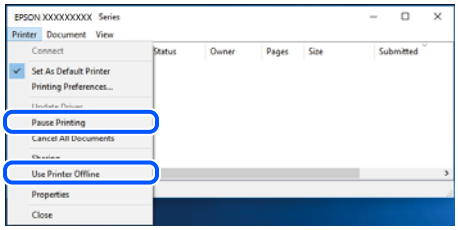

The printer is not selected as the default printer.

Solutions

Right-click the printer icon in **Control Panel** > **View devices and printers** (or **Printers**, or **Printers and Faxes**) and click **Set as default printer**.

Note:
If there are multiple printer icons, select the correct one based on the connection type, as described below.

USB connection: EPSON XXXX Series

Network connection: EPSON XXXX Series (network)

If you install the printer driver multiple times, copies of the printer driver may be created. If copies such as "EPSON XXXX Series (copy 1)" are created, right-click the copied driver icon, and then click **Remove Device**.

The printer port is not set correctly.

Solutions

Click **Print Queue** on the printer driver's **Maintenance** tab.

Make sure the printer port is set correctly as shown below in **Property** > **Port** from the **Printer** menu.

USB connection: **USBXXX**, Network connection: **EpsonNet Print Port**

Cannot Print from Mac OS

Make sure the computer and the printer are connected correctly.

The cause and solution to the problem differ depending on whether or not they are connected.

Checking the Connection Status

Use EPSON Status Monitor to check the connection status for the computer and the printer.

1. Select **System Preferences** from the Apple menu > **Printers & Scanners** (or **Print & Scan**, **Print & Fax**), and then select the printer.
2. Click **Options & Supplies** > **Utility** > **Open Printer Utility**.
3. Click **EPSON Status Monitor**.

When the remaining ink levels are displayed, a connection has been successfully established between the computer and the printer.

Check the following if a connection has not been established.

❏ The printer is not recognized over a network connection

"Cannot connect to a Network" on page 170

❏ The printer is not recognized using a USB connection

"The Printer Cannot Connect by USB (Mac OS)" on page 173

Check the following if a connection has been established.

❏ The printer is recognized, but printing cannot be performed.

"Cannot Print Even Though a Connection has been Established (Mac OS)" on page 173

Cannot connect to a Network

The problem could be one of the following issues.

Something is wrong with the network devices for Wi-Fi connection.

Solutions

Turn off the devices you want to connect to the network. Wait for about 10 seconds, and then turn on the devices in the following order; wireless router, computer or smart device, and then printer.

Move the printer and computer or smart device closer to the wireless router to help with radio wave communication, and then try to make network settings again.

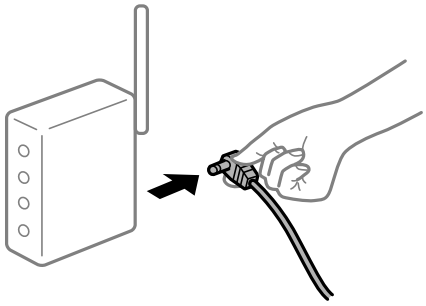

Devices cannot receive signals from the wireless router because they are too far apart.

Solutions

After moving the computer or the smart device and the printer closer to the wireless router, turn off the wireless router, and then turn it back on.

When changing the wireless router, the settings do not match the new router.

Solutions

Reconfigure the settings so that they match the new wireless router.

➡ "When Replacing the Wireless Router" on page 234

The SSIDs connected from the computer or smart device and computer are different.

Solutions

When you are using multiple wireless routers at the same time or the wireless router has multiple SSIDs and devices are connected to different SSIDs, you cannot connect to the wireless router.

Connect the computer or smart device to the same SSID as the printer.

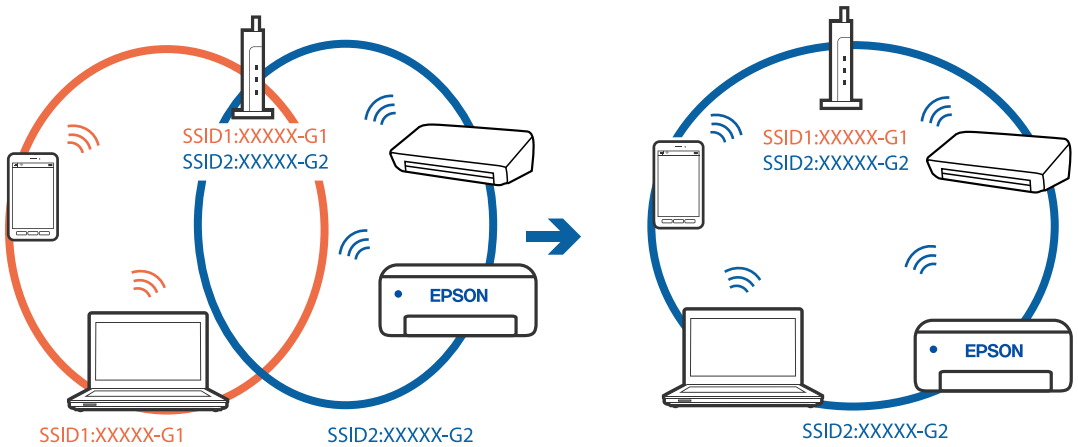

A privacy separator on the wireless router is available.

Solutions

Most wireless routers have a separator function that blocks communication between devices within the same SSID. If you cannot communicate between the printer and the computer or smart device even if

they are connected to the same network, disable the separator function on the wireless router. See the manual provided with the wireless router for details.

The IP address is incorrectly assigned.

Solutions

If the IP address assigned to the printer is 169.254.XXX.XXX, and the subnet mask is 255.255.0.0, the IP address may not be assigned correctly.

Select **Settings** > **Network Settings** > **Advanced** on the printer's control panel, and then check the IP address and the subnet mask assigned to the printer.

Restart the wireless router or reset the network settings for the printer.

➡ "Re-setting the Network Connection" on page 234

There is a problem with the network settings on the computer.

Solutions

Try accessing any website from your computer to make sure that your computer's network settings are correct. If you cannot access any website, there is a problem on the computer.

Check the network connection of the computer. See the documentation provided with the computer for details.

A device connected to the USB 3.0 port causes radio frequency interference.

Solutions

When you connect a device to the USB 3.0 port on a Mac, radio frequency interference may occur. Try the following if you cannot connect to wireless LAN (Wi-Fi) or if operations become unstable.

- ❏ Place the device that is connected to the USB 3.0 port further away from the computer.
- ❏ Connect to the SSID with the 5 GHz range.

➡ "Making Wi-Fi Settings by Entering the SSID and Password" on page 237

The printer has been connected by Ethernet using devices that support IEEE802.3az (Energy Efficient Ethernet).

Solutions

When you connect the printer by Ethernet using devices that support IEEE802.3az (Energy Efficient Ethernet), the following problems may occur depending on the hub or router that you are using.

- ❏ Connection becomes unstable, the printer is connected and disconnected again and again.
- ❏ Cannot connect to the printer.
- ❏ The communication speed becomes slow.

Follow the steps below to disable IEEE802.3az for the printer and then connect.

1. Remove the Ethernet cable connected to the computer and the printer.
2. When IEEE802.3az for the computer is enabled, disable it.

   See the documentation provided with the computer for details.
3. Connect the computer and the printer with an Ethernet cable directly.

4. On the printer, print a network connection report.
   "Printing a Network Connection Report" on page 245
5. Check the printer's IP address on the network connection report.
6. On the computer, access Web Config.
   Launch a Web browser, and then enter the printer's IP address.
   "Application for Configuring Printer Operations (Web Config)" on page 264
7. Select **Advanced Settings** from the list at the top right of the window.
8. Select **Network Settings** > **Wired LAN**.
9. Select **OFF** for **IEEE 802.3az**.
10. Click **Next**.
11. Click **OK**.
12. Remove the Ethernet cable connected to the computer and the printer.
13. If you disabled IEEE802.3az for the computer in step 2, enable it.
14. Connect the Ethernet cables that you removed in step 1 to the computer and the printer.

If the problem still occurs, devices other than the printer may be causing the problem.

The Printer Cannot Connect by USB (Mac OS)

The following causes can be considered.

The USB cable is not plugged into the electrical outlet correctly.

Solutions

Connect the USB cable securely to the printer and the computer.

There is a problem with the USB hub.

Solutions

If you are using a USB hub, try to connect the printer directly to the computer.

There is a problem with the USB cable or the USB inlet.

Solutions

Connect the USB cable to a different port, or change the USB cable.

Cannot Print Even Though a Connection has been Established (Mac OS)

One of the following situations may be the cause.

A genuine Epson printer driver has not been installed.

Solutions

If a genuine Epson printer driver (EPSON XXXXX) has not been installed, the available functions are limited. We recommend using a genuine Epson printer driver.

➡ "Checking if a genuine Epson printer driver is installed - Windows" on page 147
➡ "Checking if a genuine Epson printer driver is installed - Mac OS" on page 148

There is a problem with the software or data.

Solutions

- ❑ If you are printing a large size image, the computer may run out of memory. Print the image at a lower resolution or a smaller size.
- ❑ If you have tried all of the solutions and have not solved the problem, try uninstalling and then reinstalling the printer driver

➡ "Installing or Uninstalling Applications Separately" on page 146

There is a problem with the status of the printer.

Solutions

Make sure the printer status is not **Pause**.

Select **System Preferences** from the **Apple** menu > **Printers & Scanners** (or **Print & Scan**, **Print & Fax**), and then double-click the printer. If the printer is paused, click **Resume**.

Suddenly the Printer Cannot Print over a Network Connection

The problem could be one of the following issues.

The network environment has been changed.

Solutions

When you have changed the network environment, such as the wireless router or provider, try making network settings for the printer again.

Connect the computer or smart device to the same SSID as the printer.

➡ "Re-setting the Network Connection" on page 234

Something is wrong with the network devices for Wi-Fi connection.

Solutions

Turn off the devices you want to connect to the network. Wait for about 10 seconds, and then turn on the devices in the following order; wireless router, computer or smart device, and then printer.

Move the printer and computer or smart device closer to the wireless router to help with radio wave communication, and then try to make network settings again.

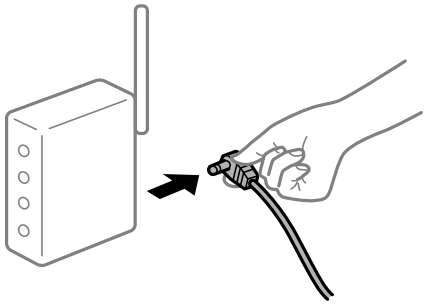

The printer is not connected to the network.

Solutions

Select **Settings** > **Network Settings** > **Connection Check**, and then print the network connection report. If the report shows that the network connection failed, check the network connection report and then follow the printed solutions.

➡ "Printing a Network Connection Report" on page 245

There is a problem with the network settings on the computer.

Solutions

Try accessing any website from your computer to make sure that your computer's network settings are correct. If you cannot access any website, there is a problem on the computer.

Check the network connection of the computer. See the documentation provided with the computer for details.

The Print Settings Menu is Not Displayed.

The following causes can be considered.

The Epson Printer Driver has Not been Installed Correctly

Solutions

If the **Print Settings** menu is not displayed on macOS Catalina (10.15) or later, macOS High Sierra (10.13), macOS Sierra (10.12), OS X El Capitan (10.11), OS X Yosemite (10.10), OS X Mavericks (10.9), OS X Mountain Lion (10.8), the Epson printer driver has not been installed correctly. Enable it from the following menu.

Select **System Preferences** from the Apple menu > **Printers & Scanners** (or **Print & Scan**, **Print & Fax**), remove the printer, and then add the printer again. See the following to add a printer.

"Adding the Printer (for Mac OS Only)" on page 148

macOS Mojave (10.14) cannot access **Print Settings** in applications made by Apple such as TextEdit.

Cannot Print from Smart Device

Make sure the smart device and the printer are connected correctly.

The cause and solution to the problem differ depending on whether or not they are connected.

Check the connection with the smart device

Use Epson Smart Panel to check the connection between the smart device and the printer.

Open the Epson Smart Panel. If you cannot connect to the printer, tap [+] at the top of the screen to reset.

If you are not using Epson Smart Panel, see the link below.

https://epson.sn

Cannot connect to a Network

The problem could be one of the following issues.

Something is wrong with the network devices for Wi-Fi connection.

Solutions

Turn off the devices you want to connect to the network. Wait for about 10 seconds, and then turn on the devices in the following order; wireless router, computer or smart device, and then printer. Move the printer and computer or smart device closer to the wireless router to help with radio wave communication, and then try to make network settings again.

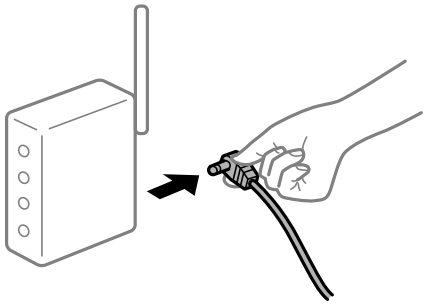

Devices cannot receive signals from the wireless router because they are too far apart.

Solutions

After moving the computer or the smart device and the printer closer to the wireless router, turn off the wireless router, and then turn it back on.

When changing the wireless router, the settings do not match the new router.

Solutions

Reconfigure the settings so that they match the new wireless router.

➡ "When Replacing the Wireless Router" on page 234

The SSIDs connected from the computer or smart device and computer are different.

Solutions

When you are using multiple wireless routers at the same time or the wireless router has multiple SSIDs and devices are connected to different SSIDs, you cannot connect to the wireless router.

Connect the computer or smart device to the same SSID as the printer.

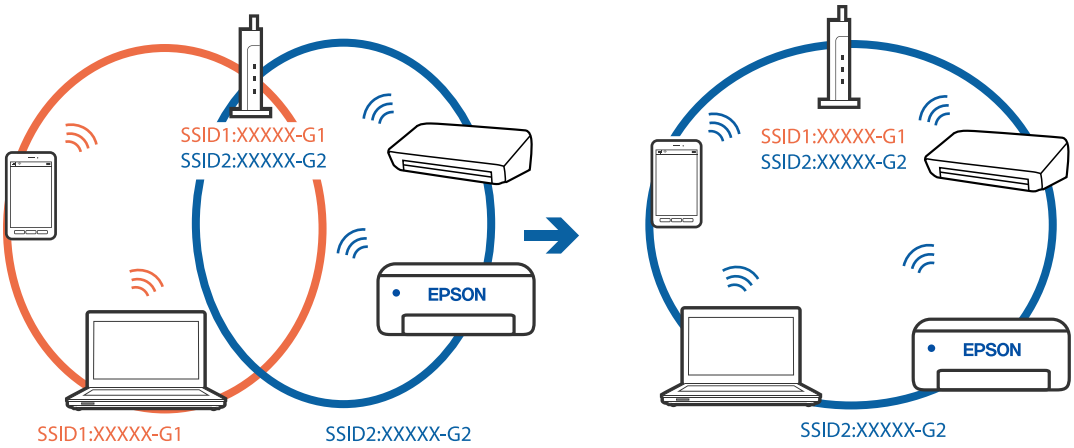

A privacy separator on the wireless router is available.

Solutions

Most wireless routers have a separator function that blocks communication between devices within the same SSID. If you cannot communicate between the printer and the computer or smart device even if they are connected to the same network, disable the separator function on the wireless router. See the manual provided with the wireless router for details.

The IP address is incorrectly assigned.

Solutions

If the IP address assigned to the printer is 169.254.XXX.XXX, and the subnet mask is 255.255.0.0, the IP address may not be assigned correctly.

Select **Settings** > **Network Settings** > **Advanced** on the printer's control panel, and then check the IP address and the subnet mask assigned to the printer.

Restart the wireless router or reset the network settings for the printer.

➡ "Re-setting the Network Connection" on page 234

There is a problem with the network settings on the smart device.

Solutions

Try accessing any website from your smart device to make sure that your smart device's network settings are correct. If you cannot access any website, there is a problem on the smart device.

Check the network connection of the computer. See the documentation provided with the smart device for details.

Cannot Print Even Though a Connection has been Established (iOS)

One of the following situations may be the cause.

Paper Configuration is disabled.

Solutions

Enable **Paper Configuration** in the following menu on the LCD screen.

Settings > **Printer Settings** > **Paper Source Setting** > **Paper Configuration**

AirPrint is disabled.

Solutions

Enable the AirPrint setting in Web Config.

➡ "Application for Configuring Printer Operations (Web Config)" on page 264

Suddenly the Printer Cannot Print over a Network Connection

The problem could be one of the following issues.

The network environment has been changed.

Solutions

When you have changed the network environment, such as the wireless router or provider, try making network settings for the printer again.

Connect the computer or smart device to the same SSID as the printer.

➡ "Re-setting the Network Connection" on page 234

Something is wrong with the network devices for Wi-Fi connection.

Solutions

Turn off the devices you want to connect to the network. Wait for about 10 seconds, and then turn on the devices in the following order; wireless router, computer or smart device, and then printer. Move the printer and computer or smart device closer to the wireless router to help with radio wave communication, and then try to make network settings again.

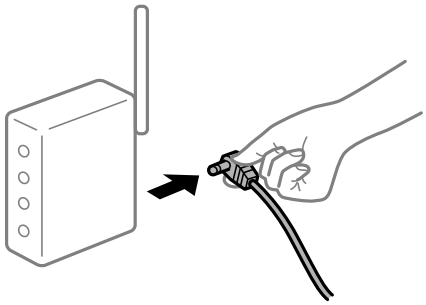

The printer is not connected to the network.

Solutions

Select **Settings** > **Network Settings** > **Connection Check**, and then print the network connection report. If the report shows that the network connection failed, check the network connection report and then follow the printed solutions.

➡ "Printing a Network Connection Report" on page 245

There is a problem with the network settings on the smart device.

Solutions

Try accessing any website from your smart device to make sure that your smart device's network settings are correct. If you cannot access any website, there is a problem on the smart device.

Check the network connection of the computer. See the documentation provided with the smart device for details.

Cannot Start Scanning

Cannot Start Scanning from Windows

Make sure the computer and the printer are connected correctly.

The cause and solution to the problem differ depending on whether or not they are connected.

Checking the Connection Status

Use Epson Printer Connection Checker to check the connection status for the computer and the printer. You may be able to solve the problem depending on the results of the check.

1. Double-click the **Epson Printer Connection Checker** icon on the desktop.

   Epson Printer Connection Checker starts.

   If there is no icon on the desktop, follow the methods below to start Epson Printer Connection Checker.

   ❏ Windows 10

   Click the start button, and then select **Epson Software** > **Epson Printer Connection Checker**.

   ❏ Windows 8.1/Windows 8

   Enter the application name in the search charm, and then select the displayed icon.

   ❏ Windows 7

   Click the start button, and then select **All Programs** > **Epson Software** > **Epson Printer Connection Checker**.

2. Follow the on-screen instructions to check.

   Note:
   If the printer name is not displayed, install a genuine Epson printer driver.

   "Checking if a genuine Epson printer driver is installed - Windows" on page 147

When you have identified the problem, follow the solution displayed on the screen.

When you cannot solve the problem, check the following according to your situation.

❏ The printer is not recognized over a network connection

"Cannot connect to a Network" on page 180

❏ The printer is not recognized using a USB connection

"The Printer Cannot Connect by USB (Windows)" on page 165

❏ The printer is recognized, but scanning cannot be performed.

"Cannot Scan Even Though a Connection has been Correctly Established (Windows)" on page 183

Cannot connect to a Network

The problem could be one of the following issues.

Something is wrong with the network devices for Wi-Fi connection.

Solutions

Turn off the devices you want to connect to the network. Wait for about 10 seconds, and then turn on the devices in the following order; wireless router, computer or smart device, and then printer. Move the printer and computer or smart device closer to the wireless router to help with radio wave communication, and then try to make network settings again.

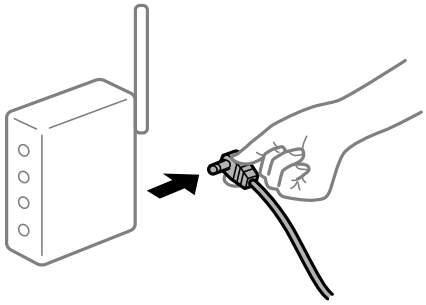

Devices cannot receive signals from the wireless router because they are too far apart.

Solutions

After moving the computer or the smart device and the printer closer to the wireless router, turn off the wireless router, and then turn it back on.

When changing the wireless router, the settings do not match the new router.

Solutions

Reconfigure the settings so that they match the new wireless router.

➡ "When Replacing the Wireless Router" on page 234

The SSIDs connected from the computer or smart device and computer are different.

Solutions

When you are using multiple wireless routers at the same time or the wireless router has multiple SSIDs and devices are connected to different SSIDs, you cannot connect to the wireless router.

Connect the computer or smart device to the same SSID as the printer.

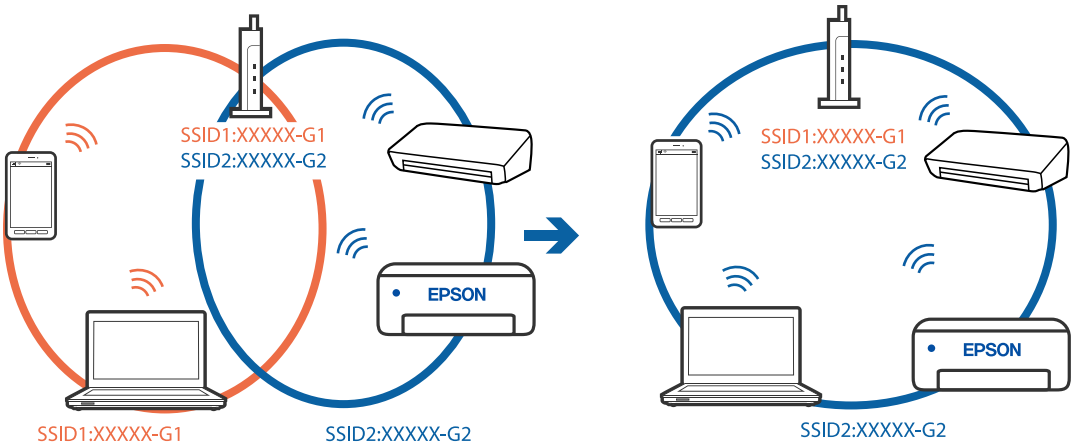

A privacy separator on the wireless router is available.

Solutions

Most wireless routers have a separator function that blocks communication between devices within the same SSID. If you cannot communicate between the printer and the computer or smart device even if they are connected to the same network, disable the separator function on the wireless router. See the manual provided with the wireless router for details.

The IP address is incorrectly assigned.

Solutions

If the IP address assigned to the printer is 169.254.XXX.XXX, and the subnet mask is 255.255.0.0, the IP address may not be assigned correctly.

Select **Settings** > **Network Settings** > **Advanced** on the printer's control panel, and then check the IP address and the subnet mask assigned to the printer.

Restart the wireless router or reset the network settings for the printer.

➡ "Re-setting the Network Connection" on page 234

There is a problem with the network settings on the computer.

Solutions

Try accessing any website from your computer to make sure that your computer's network settings are correct. If you cannot access any website, there is a problem on the computer.

Check the network connection of the computer. See the documentation provided with the computer for details.

The printer has been connected by Ethernet using devices that support IEEE802.3az (Energy Efficient Ethernet).

Solutions

When you connect the printer by Ethernet using devices that support IEEE802.3az (Energy Efficient Ethernet), the following problems may occur depending on the hub or router that you are using.

❏ Connection becomes unstable, the printer is connected and disconnected again and again.

❏ Cannot connect to the printer.

❏ The communication speed becomes slow.

Follow the steps below to disable IEEE802.3az for the printer and then connect.

1. Remove the Ethernet cable connected to the computer and the printer.
2. When IEEE802.3az for the computer is enabled, disable it.
   See the documentation provided with the computer for details.
3. Connect the computer and the printer with an Ethernet cable directly.
4. On the printer, print a network connection report.
   "Printing a Network Connection Report" on page 245
5. Check the printer's IP address on the network connection report.
6. On the computer, access Web Config.
   Launch a Web browser, and then enter the printer's IP address.
   "Application for Configuring Printer Operations (Web Config)" on page 264
7. Select **Advanced Settings** from the list at the top right of the window.
8. Select **Network Settings** > **Wired LAN**.
9. Select **OFF** for **IEEE 802.3az**.
10. Click **Next**.
11. Click **OK**.
12. Remove the Ethernet cable connected to the computer and the printer.
13. If you disabled IEEE802.3az for the computer in step 2, enable it.
14. Connect the Ethernet cables that you removed in step 1 to the computer and the printer.

If the problem still occurs, devices other than the printer may be causing the problem.

The Printer Cannot Connect by USB (Windows)

The following causes can be considered.

The USB cable is not plugged into the electrical outlet correctly.

Solutions

Connect the USB cable securely to the printer and the computer.

There is a problem with the USB hub.

Solutions

If you are using a USB hub, try to connect the printer directly to the computer.

There is a problem with the USB cable or the USB inlet.

Solutions

Connect the USB cable to a different port, or change the USB cable.

Cannot Scan Even Though a Connection has been Correctly Established (Windows)

Scanning at a high resolution over a network.

Solutions

Try scanning at a lower resolution.

Cannot Start Scanning from Mac OS

Make sure the computer and the printer are connected correctly.

The cause and solution to the problem differ depending on whether or not they are connected.

Checking the Connection Status

Use EPSON Status Monitor to check the connection status for the computer and the printer.

1. Select **System Preferences** from the Apple menu > **Printers & Scanners** (or **Print & Scan**, **Print & Fax**), and then select the printer.
2. Click **Options & Supplies** > **Utility** > **Open Printer Utility**.
3. Click **EPSON Status Monitor**.

When the remaining ink levels are displayed, a connection has been successfully established between the computer and the printer.

Check the following if a connection has not been established.

❏ The printer is not recognized over a network connection
"Cannot connect to a Network" on page 183

❏ The printer is not recognized using a USB connection
"The Printer Cannot Connect by USB (Mac OS)" on page 173

Check the following if a connection has been established.

❏ The printer is recognized, but scanning cannot be performed.
"Cannot Scan Even Though a Connection has been Correctly Established (Mac OS)" on page 187

Cannot connect to a Network

The problem could be one of the following issues.

Something is wrong with the network devices for Wi-Fi connection.

Solutions

Turn off the devices you want to connect to the network. Wait for about 10 seconds, and then turn on the devices in the following order; wireless router, computer or smart device, and then printer. Move the printer and computer or smart device closer to the wireless router to help with radio wave communication, and then try to make network settings again.

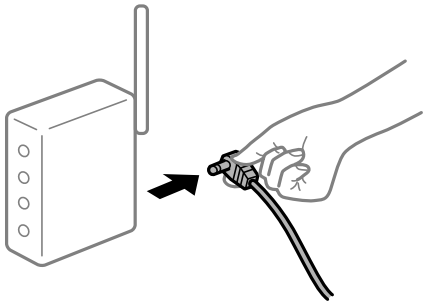

Devices cannot receive signals from the wireless router because they are too far apart.

Solutions

After moving the computer or the smart device and the printer closer to the wireless router, turn off the wireless router, and then turn it back on.

When changing the wireless router, the settings do not match the new router.

Solutions

Reconfigure the settings so that they match the new wireless router.

➡ "When Replacing the Wireless Router" on page 234

The SSIDs connected from the computer or smart device and computer are different.

Solutions

When you are using multiple wireless routers at the same time or the wireless router has multiple SSIDs and devices are connected to different SSIDs, you cannot connect to the wireless router.

Connect the computer or smart device to the same SSID as the printer.

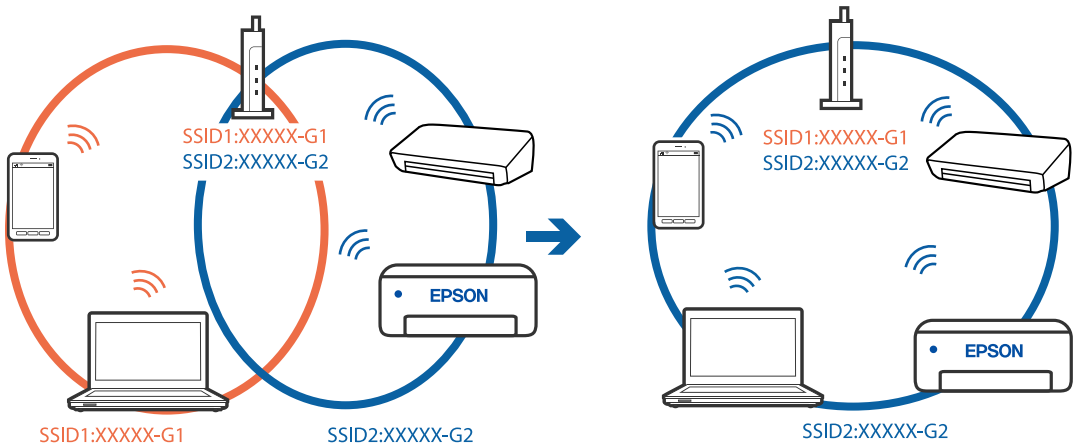

A privacy separator on the wireless router is available.

Solutions

Most wireless routers have a separator function that blocks communication between devices within the same SSID. If you cannot communicate between the printer and the computer or smart device even if they are connected to the same network, disable the separator function on the wireless router. See the manual provided with the wireless router for details.

The IP address is incorrectly assigned.

Solutions

If the IP address assigned to the printer is 169.254.XXX.XXX, and the subnet mask is 255.255.0.0, the IP address may not be assigned correctly.

Select **Settings** > **Network Settings** > **Advanced** on the printer's control panel, and then check the IP address and the subnet mask assigned to the printer.

Restart the wireless router or reset the network settings for the printer.

➡ "Re-setting the Network Connection" on page 234

There is a problem with the network settings on the computer.

Solutions

Try accessing any website from your computer to make sure that your computer's network settings are correct. If you cannot access any website, there is a problem on the computer.

Check the network connection of the computer. See the documentation provided with the computer for details.

A device connected to the USB 3.0 port causes radio frequency interference.

Solutions

When you connect a device to the USB 3.0 port on a Mac, radio frequency interference may occur. Try the following if you cannot connect to wireless LAN (Wi-Fi) or if operations become unstable.

- ❏ Place the device that is connected to the USB 3.0 port further away from the computer.
- ❏ Connect to the SSID with the 5 GHz range.

➡ "Making Wi-Fi Settings by Entering the SSID and Password" on page 237

The printer has been connected by Ethernet using devices that support IEEE802.3az (Energy Efficient Ethernet).

Solutions

When you connect the printer by Ethernet using devices that support IEEE802.3az (Energy Efficient Ethernet), the following problems may occur depending on the hub or router that you are using.

- ❏ Connection becomes unstable, the printer is connected and disconnected again and again.
- ❏ Cannot connect to the printer.
- ❏ The communication speed becomes slow.

Follow the steps below to disable IEEE802.3az for the printer and then connect.

1. Remove the Ethernet cable connected to the computer and the printer.

2. When IEEE802.3az for the computer is enabled, disable it.
   See the documentation provided with the computer for details.
3. Connect the computer and the printer with an Ethernet cable directly.
4. On the printer, print a network connection report.
   "Printing a Network Connection Report" on page 245
5. Check the printer's IP address on the network connection report.
6. On the computer, access Web Config.
   Launch a Web browser, and then enter the printer's IP address.
   "Application for Configuring Printer Operations (Web Config)" on page 264
7. Select **Advanced Settings** from the list at the top right of the window.
8. Select **Network Settings** > **Wired LAN**.
9. Select **OFF** for **IEEE 802.3az**.
10. Click **Next**.
11. Click **OK**.
12. Remove the Ethernet cable connected to the computer and the printer.
13. If you disabled IEEE802.3az for the computer in step 2, enable it.
14. Connect the Ethernet cables that you removed in step 1 to the computer and the printer.

If the problem still occurs, devices other than the printer may be causing the problem.

The Printer Cannot Connect by USB (Mac OS)

The following causes can be considered.

The USB cable is not plugged into the electrical outlet correctly.

Solutions

Connect the USB cable securely to the printer and the computer.

There is a problem with the USB hub.

Solutions

If you are using a USB hub, try to connect the printer directly to the computer.

There is a problem with the USB cable or the USB inlet.

Solutions

Connect the USB cable to a different port, or change the USB cable.

Cannot Scan Even Though a Connection has been Correctly Established (Mac OS)

Scanning at a high resolution over a network.

Solutions

Try scanning at a lower resolution.

Cannot Start Scanning from Smart Device

Make sure the smart device and the printer are connected correctly.

The cause and solution to the problem differ depending on whether or not they are connected.

Check the connection with the smart device

Use Epson Smart Panel to check the connection between the smart device and the printer.

Open the Epson Smart Panel. If you cannot connect to the printer, tap [+] at the top of the screen to reset.

If you are not using Epson Smart Panel, see the link below.

https://epson.sn

Cannot connect to a Network

The problem could be one of the following issues.

Something is wrong with the network devices for Wi-Fi connection.

Solutions

Turn off the devices you want to connect to the network. Wait for about 10 seconds, and then turn on the devices in the following order; wireless router, computer or smart device, and then printer. Move the printer and computer or smart device closer to the wireless router to help with radio wave communication, and then try to make network settings again.

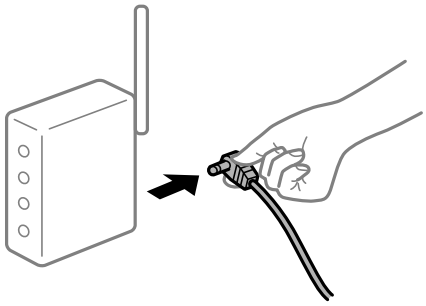

Devices cannot receive signals from the wireless router because they are too far apart.

Solutions

After moving the computer or the smart device and the printer closer to the wireless router, turn off the wireless router, and then turn it back on.

When changing the wireless router, the settings do not match the new router.

Solutions

Reconfigure the settings so that they match the new wireless router.

➡ "When Replacing the Wireless Router" on page 234

The SSIDs connected from the computer or smart device and computer are different.

Solutions

When you are using multiple wireless routers at the same time or the wireless router has multiple SSIDs and devices are connected to different SSIDs, you cannot connect to the wireless router.

Connect the computer or smart device to the same SSID as the printer.

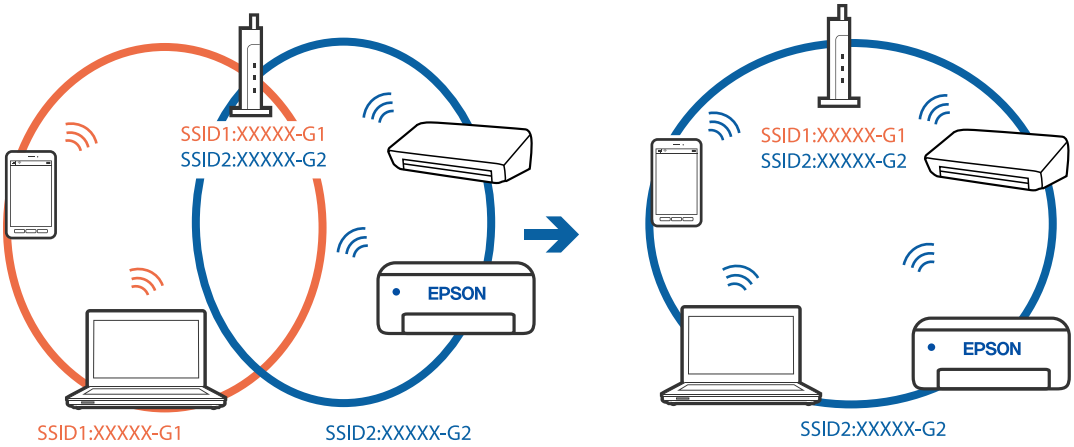

A privacy separator on the wireless router is available.

Solutions

Most wireless routers have a separator function that blocks communication between devices within the same SSID. If you cannot communicate between the printer and the computer or smart device even if they are connected to the same network, disable the separator function on the wireless router. See the manual provided with the wireless router for details.

The IP address is incorrectly assigned.

Solutions

If the IP address assigned to the printer is 169.254.XXX.XXX, and the subnet mask is 255.255.0.0, the IP address may not be assigned correctly.

Select **Settings** > **Network Settings** > **Advanced** on the printer's control panel, and then check the IP address and the subnet mask assigned to the printer.

Restart the wireless router or reset the network settings for the printer.

➡ "Re-setting the Network Connection" on page 234

There is a problem with the network settings on the smart device.

Solutions

Try accessing any website from your smart device to make sure that your smart device's network settings are correct. If you cannot access any website, there is a problem on the smart device.

Check the network connection of the computer. See the documentation provided with the smart device for details.

Cannot Operate the Printer as Expected

Operations are Slow

Printing Is Too Slow

One of the following situations may be the cause.

Unnecessary applications are running.

Solutions

Close any unnecessary applications on your computer or smart device.

The print quality setting is too high.

Solutions

Lower the quality setting.

Bidirectional printing is disabled.

Solutions

Enable the bidirectional (or high speed) setting. When this setting is enabled, the print head prints while moving in both directions, and the printing speed increases.

- Control panel

  Enable **Bidirectional** in **Settings** > **Printer Settings**.

- Windows

  Select **Bidirectional Printing** on the printer driver's **More Options** tab.

- Mac OS

  Select **System Preferences** from the Apple menu > **Printers & Scanners** (or **Print & Scan**, **Print & Fax**), and then select the printer. Click **Options & Supplies** > **Options** (or **Driver**). Select On as the **High Speed Printing** setting.

Quiet Mode is enabled.

Solutions

Disable **Quiet Mode**. The printing speed slows down when the printer is running in **Quiet Mode**.

- Control panel

  Select

on the home screen, and then select **Off**.

- Windows

  Select **Off** as the **Quiet Mode** setting on the printer driver's **Main** tab.

❏ Mac OS

Select **System Preferences** from the Apple menu > **Printers & Scanners** (or **Print & Scan**, **Print & Fax**), and then select the printer. Click **Options & Supplies** > **Options** (or **Driver**). Select Off as the **Quiet Mode** setting.

There may be network connection problems with the wireless router.

Solutions

Reboot the wireless router while taking into consideration other users connected to the network. If this does not solve the problem, place the printer closer to your wireless router or see the documentation provided with the router.

The printer is printing high-density data such as photos on plain paper.

Solutions

If you are printing high-density data such as photos on plain paper, printing may take some time in order to maintain print quality. This is not a malfunction.

Printing Slows Down Dramatically During Continuous Printing

The printer has slowed down to prevent the printer mechanism from overheating and being damaged.

Solutions

You can continue printing. To return to normal printing speed, leave the printer idle for at least 30 minutes with the power turned on.

Scanning Speed Is Slow

The scanning resolution setting is too high.

Solutions

Try scanning at a lower resolution.

LCD Screen Gets Dark

The printer is in sleep mode.

Solutions

Tap anywhere on the LCD screen to turn it back on.

"!" is Displayed on the Screen and you Cannot Select Photos

The image file is not supported.

Solutions

"!" is displayed on the LCD screen when the image file is not supported by the product. Use files supported by the product.

➡ "Supported Data Specifications" on page 280

The file name is too long to be recognized by the printer.

Solutions

You can use the following solutions to print photos.

- ❏ Print from a computer
- ❏ Print from a smart device using Epson Smart Panel
  You do not need to remove the memory card from your smart device.

Cannot Pinch in or Pinch out

Not enough pressure is being used when pressing on the screen.

Solutions

If you cannot pinch in or pinch out, press on the screen with slightly more pressure.

Cannot Close the Scanner Unit

The scanner unit is designed to close slowly and with some resistance to avoid trapping fingers.

Solutions

Continue to close even if you feel some resistance.

The Document Cover Came Off

Open the feeder guard, and then insert the document cover vertically with the tabs straight.

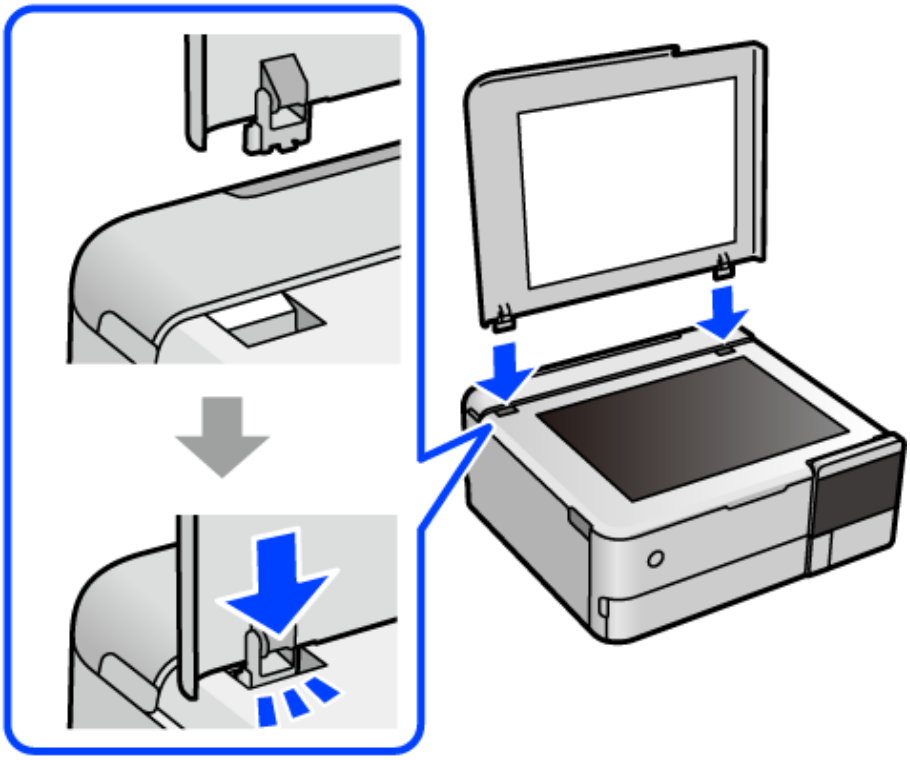

Cannot Close the Rear Paper Support

Stand the paper support upright, and then insert it into the slot as shown in the following illustration.

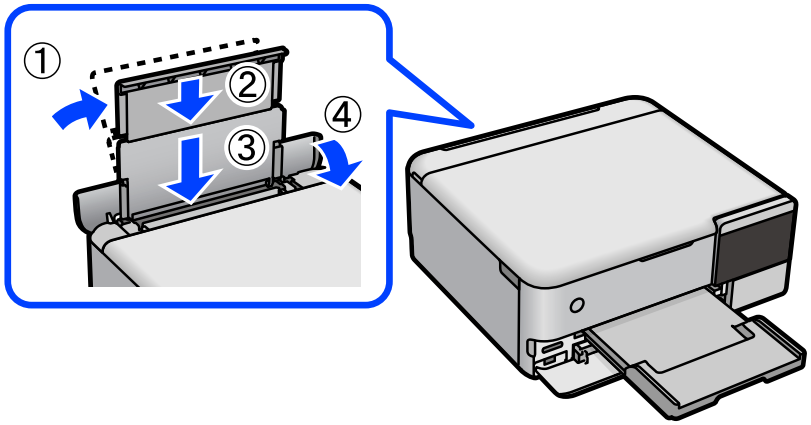

The Paper Support Came Off

Insert the protruding parts of the paper support for the rear paper feeder vertically into the slots on each side.

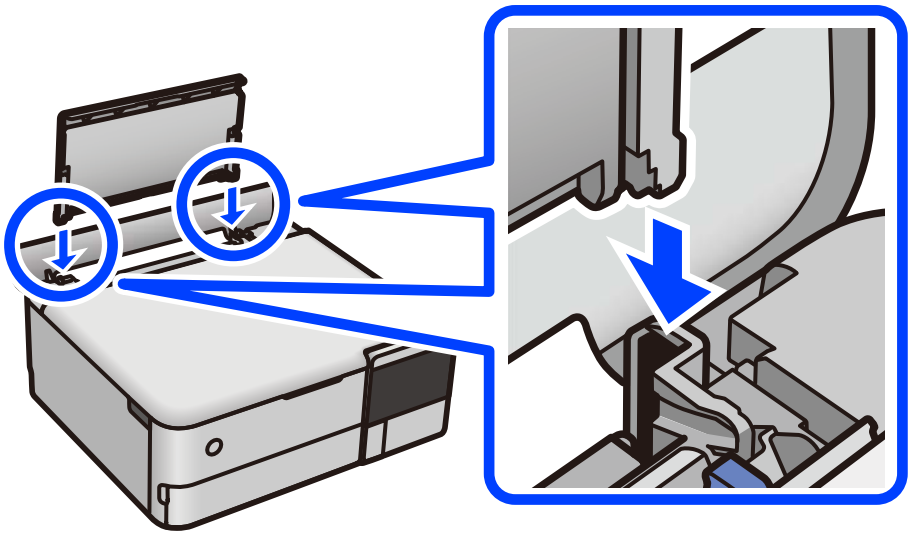

Cannot Save Data to a Memory Device

One of the following situations may be the cause.

A non-supported memory device is being used.

Solutions

Use a memory device supported by the product.

The memory device is write-protected.

Solutions

Disable write protection on the memory device.

There is not enough free space on the memory device.

Solutions

Delete unnesesary data or insert another memory device.

The Printer Is Loud

Quiet Mode is disabled on the printer.

Solutions

If operations sounds are too loud, enable **Quiet Mode**. Enabling this feature may reduce printing speed.

❏ Control panel

Select OFF on the home screen, and then select **On**.

❏ Windows

Select **On** as the **Quiet Mode** on the printer driver's **Main** tab.

❑ Mac OS

Select **System Preferences** from the Apple menu > **Printers & Scanners** (or **Print & Scan**, **Print & Fax**), and then select the printer. Click **Options & Supplies** > **Options** (or **Driver**). Select On as the **Quiet Mode** setting.

The Root Certificate Needs to be Updated

The root certificate has expired.

Solutions

Run Web Config, and then update the root certificate.

➡ "Application for Configuring Printer Operations (Web Config)" on page 264

Cannot Cancel Printing from a Computer Running Mac OS X v10.6.8

There is a problem with your AirPrint setup.

Solutions

Run Web Config, and then select **Port9100** as the **Top Priority Protocol** setting in **AirPrint Setup**. Select **System Preferences** from the Apple menu > **Printers & Scanners** (or **Print & Scan**, **Print & Fax**), remove the printer, and then add the printer again.

➡ "Application for Configuring Printer Operations (Web Config)" on page 264

A Message Prompting You to Reset the Ink Level is Displayed Even After Refilling the Ink

Ink level was not reset.

Solutions

After refilling the ink, follow the on-screen instructions to reset the ink level.

➡ "Notes on Resetting the Ink Level" on page 209

The Ink Level Display does not Change Even After Refilling the Ink

Ink level was not reset.

Solutions

After refilling the ink, follow the on-screen instructions to reset the ink level.

➡ "Notes on Resetting the Ink Level" on page 209

Cannot Select Paper Type or Paper Source in Printer Driver

A genuine Epson printer driver has not been installed.

Solutions

If a genuine Epson printer driver (EPSON XXXXX) has not been installed, the available functions are limited. We recommend using a genuine Epson printer driver.

➡ "Checking if a genuine Epson printer driver is installed - Windows" on page 147
➡ "Checking if a genuine Epson printer driver is installed - Mac OS" on page 148

A Message is Displayed on the LCD Screen

If a error message is displayed on the LCD screen, follow the on-screen instructions or the solutions below to solve the problem.

Error Messages	Solution
Printer Error Turn on the printer again. See your documentation for more details.	Open the document cover and the scanner unit, and then remove any paper or protective material inside the printer. Turn the power off and on again.
The combination of the IP address and the subnet mask is invalid. See your documentation for more details.	Enter the correct IP address or default gateway. Contact the person who setup the network for assistance.
Print Head Adjustment Canceled. There is a problem with the print head. Contact Epson Support.	If print quality has not improved after repeating nozzle check and head cleaning 3 times, wait for at least 12 hours without printing, and then run the nozzle check again and repeat the head cleaning if necessary. We recommend turning off the printer using the ⏻ button. If print quality has still not improved, run Power Cleaning. If print quality has not improved after running Power Cleaning, wait for at least 12 hours without printing, and then print the nozzle check pattern again. Run Cleaning or Power Cleaning again depending on the printed pattern. If quality still does not improve, contact Epson support.
Access the following or see documentation for details. Select [Dismiss] after confirming it.	If you cannot scan the QR code, connect with a smart device. See the following for more details. "Making Settings for Connecting to the Smart Device" on page 234
Communication error. Check if the computer is connected.	Connect the computer and the printer correctly. If you are connecting over a network, see the page that describes the network connection method from the computer. If the error message is displayed during scanning, make sure that Epson ScanSmart is installed on the computer. "Making Settings for Connecting to the Computer" on page 234
To use cloud services, update the root certificate from the Epson Web Config utility.	Run Web Config, and then update the root certificate. "Running Web Config on a Web Browser" on page 265
Install the Epson Event Manager software on the computer to use this feature. See your documentation for more details.	Install Epson ScanSmart on the computer. "Installing the Applications Separately" on page 146

Error Messages	Solution
Check the following if a computer is not found. - Connection between the printer and the computer (USB or network) - Installation of the necessary software - Power supply to the computer - Firewall and security software settings - Search again See your documentation for more details.	Make sure the computer is connected correctly. "Checking the Connection Status" on page 162 "Checking the Connection Status" on page 170 Make sure that Epson ScanSmart is installed on the computer. "Installing the Applications Separately" on page 146
Check that the printer driver is installed on the computer and that the port settings for the printer are correct.	Make sure the printer port is selected correctly in **Property** > **Port** from the **Printer** menu as follows. Select "**USBXXX**" for a USB connection, or "**EpsonNet Print Port** for a Check that the printer driver is installed on the network connection.
Check that the printer driver is installed on the computer and that the USB port settings for the printer are correct.	
Paper Configuration is set to Off. Some features may not be available. For details, see your documentation.	If the **Paper Configuration** is disabled, you cannot use AirPrint.
Cannot use the inserted Memory Device. See your documentation for details.	Use a memory device supported by the product. "Memory Device Specifications" on page 279
Printing canceled because the long paper might eject halfway through printing.Set the paper length shorter than 1300 mm.See your documentation for details.	Printing takes a long time due to the high temperatures, and long paper may be ejected halfway through printing. ❏ Set the paper length so that it is shorter than 1.3 m. ❏ Print at a temperature lower than 32°C.
Printing canceled because the long paper might eject halfway through printing.Set the Quality to Standard.See your documentation for details.	Printing takes a long time due to a large volume of print data, and long paper may be ejected halfway through printing. Set the **Quality** to **Standard**.
The printer's borderless printing ink pad has reached the end of its service life. It is not a user-replaceable part. Please contact Epson support.	Contact Epson or an authorised Epson service provider to replace the borderless printing ink pad*. It is not a user-serviceable part. Borderless printing is not available, but printing with a border is available. "Contacting Epson Support" on page 286
The printer's borderless printing ink pad is nearing the end of its service life. It is not a user-replaceable part. Please contact Epson support.	Contact Epson or an authorised Epson service provider to replace the borderless printing ink pad*. It is not a user-serviceable part. Tap **OK** to resume printing. "Contacting Epson Support" on page 286
Printer Error Turn the power off and on again. If the problem persists, press "Proceed".	Do the following. 1. Open the scanner unit and remove any paper or protective material inside the printer. Clean the translucent film if it is smeared. "Removing Jammed Paper" on page 198 "Cleaning the Translucent Film" on page 140 2. Close the scanner unit and turn the power off and on again. If the error message is still displayed after turning the power off and on again, contact Epson support. "Contacting Epson Support" on page 286

Error Messages	Solution
An error occurred while saving. Check and if necessary, change the memory device.	The external storage device, such as a memory card, may be damaged. Check if the device is available. "Memory Device Specifications" on page 279
Cannot recognize the media. See your documentation for more details about the media	Use a memory device supported by the product. "Memory Device Specifications" on page 279
Have you loaded the following paper in the XX?	Change the print settings or load paper that matches the print settings in the paper cassette, and then change the paper settings. If you do not want to display this message from the next time, select **Settings** > **Guide Functions**, and then set **Paper Mismatch** to **Off**.
Recovery Mode Update Firmware	The printer has started in recovery mode because the firmware update failed. Follow the steps below to try to update the firmware again. 1. Connect the computer and the printer with a USB cable. (During recovery mode, you cannot update the firmware over a network connection.) 2. Visit your local Epson website for further instructions.

*In some print cycles a very small amount of surplus ink may be collected in the borderless printing ink pad. To prevent ink leakage from the pad, the product is designed to stop borderless printing when the pad has reached its limit. Whether and how often this is required will vary according to the number of pages you print using the borderless print option. The need for replacement of the pad does not mean that your printer has ceased to operate in accordance with its specifications. The printer will advise you when the pad requires replacing and this can only be performed by an authorised Epson Service provider. The Epson warranty does not cover the cost of this replacement.

Paper Gets Jammed

Check the error displayed on the control panel and follow the instructions to remove the jammed paper including any torn pieces. Next, clear the error. The LCD screen displays an animation that shows you how to remove jammed paper.

Caution:

Never touch the buttons on the control panel while your hand is inside the printer. If the printer starts operating, it could cause an injury. Be careful not to touch the protruding parts to avoid injury.

Important:

Remove the jammed paper carefully. Removing the paper vigorously may cause damage to the printer.

Removing Jammed Paper

> ⚠ ***Caution:***
>
> ❑ *Be careful not to trap your hand or fingers when opening or closing the scanner unit. Otherwise you may be injured.*
>
> ❑ *Never touch the buttons on the control panel while your hand is inside the printer. If the printer starts operating, it could cause an injury. Be careful not to touch the protruding parts to avoid injury.*

1. Extend the paper support and tilt it back.

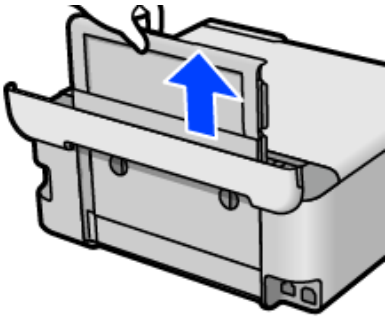

2. Remove the rear cover.

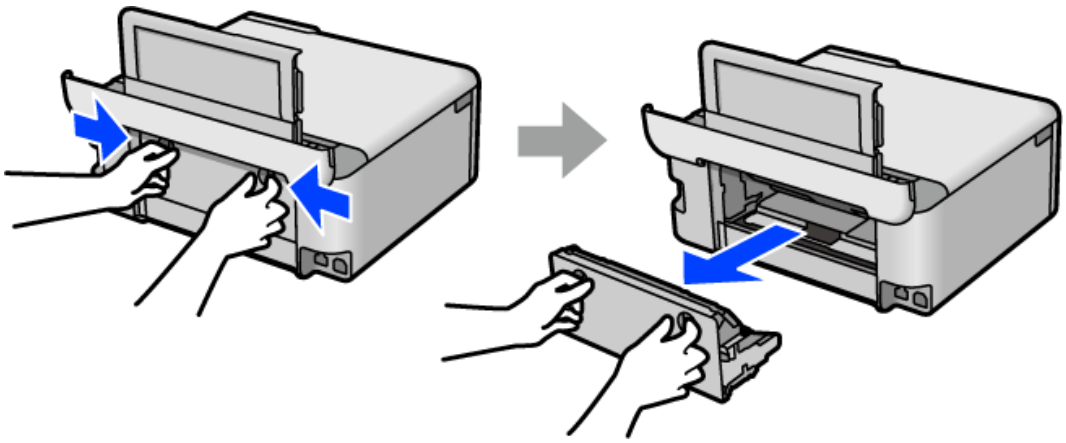

3. Remove the jammed paper.

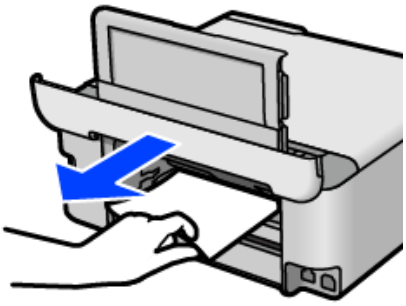

4. Remove jammed paper from the rear cover.

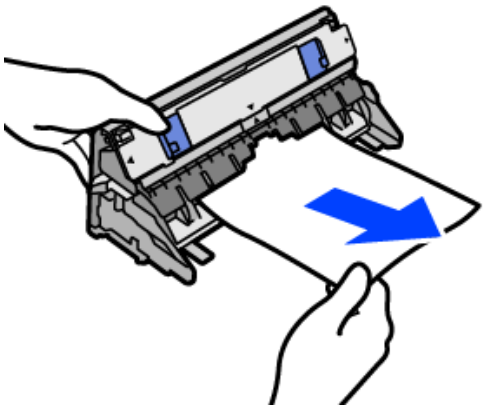

Important:

Do not touch the parts shown in the following illustration. Otherwise, they may be damaged.

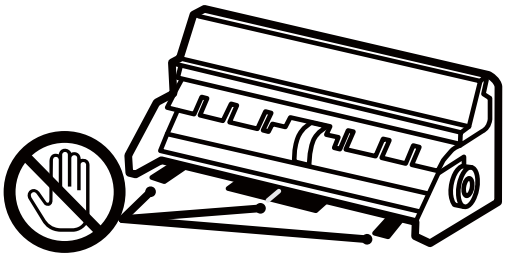

5. Insert the rear cover in the printer.

6. Close the document cover if it is open.

7. Open the scanner unit with both hand until it locks.

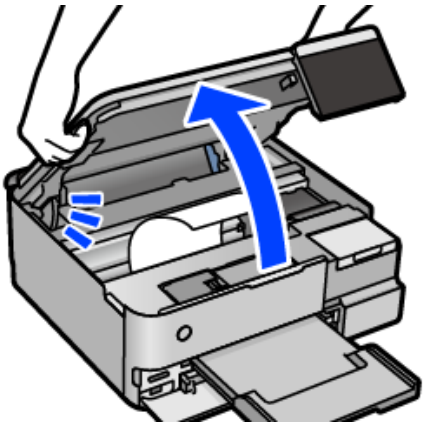

8. Remove the jammed paper.

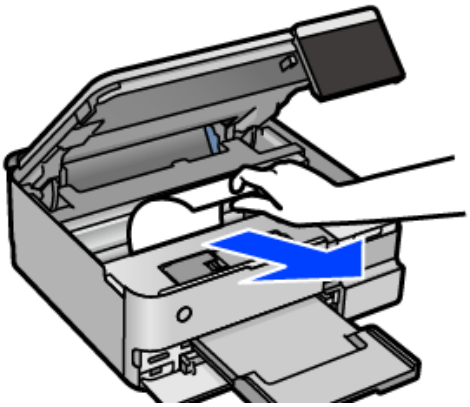

Important:

Do not touch the white flat cable, translucent film, or transportation lock inside the printer. Doing so may cause a malfunction.

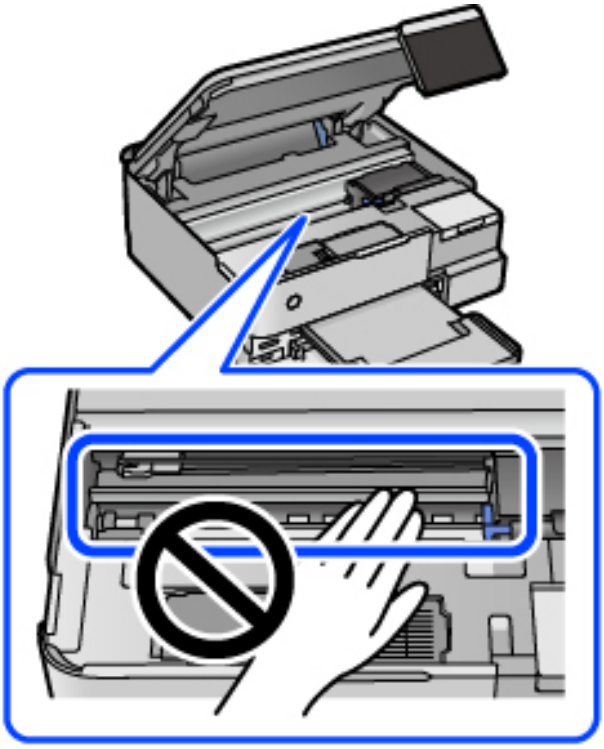

9. Close the scanner unit.

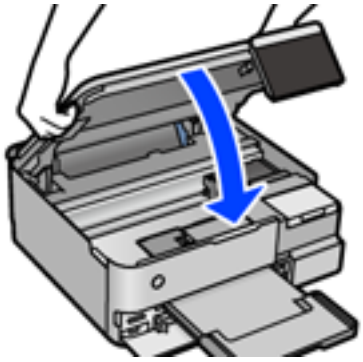

Note:

The scanner unit is designed to close slowly and resist a little as a precaution against catching fingers. Continue to close even if you feel some resistance.

10. Close the output tray.

11. Pull out the paper cassette.

    For paper cassette 2, lift it up slightly, and then pull it out.

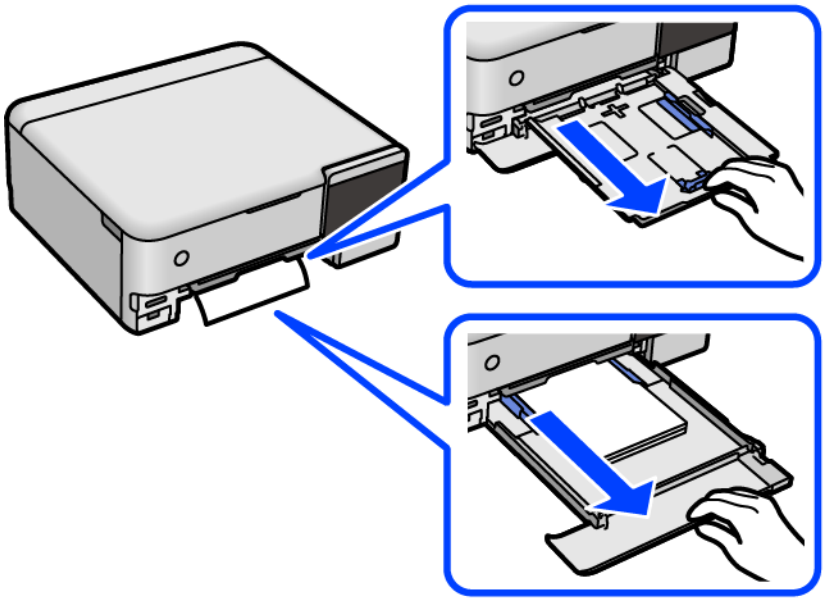

12. Remove the jammed paper.

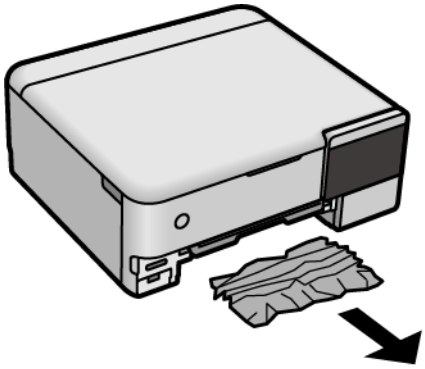

13. Align the edges of the paper and slide the edge guides to the edges of the paper.

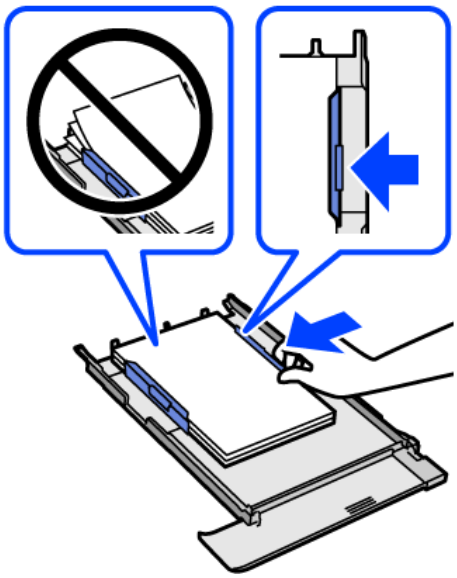

14. Insert the paper cassette in the printer.

Preventing Paper Jams

Check the following if paper jams occur frequently.

- ❑ Place the printer on a flat surface and operate in the recommended environmental conditions.
  "Environmental Specifications" on page 281
- ❑ Use the paper supported by this printer.
  "Available Paper and Capacities" on page 253
- ❑ Follow paper handling precautions.
  "Paper Handling Precautions" on page 32
- ❑ Load paper in the correct direction, and slide the edge guide against the edge of the paper.
  "Loading Paper" on page 35
- ❑ Do not load more than the maximum number of sheets specified for paper.
- ❑ Load one sheet of paper at a time if you have loaded several sheets of paper.
- ❑ Make sure the paper size and paper type settings match the actual paper size and paper type loaded in the printer.
  "List of Paper Type" on page 34
- ❑ Clean the roller inside the printer.
  "Improving Paper Feeding Problems" on page 130

It is Time to Refill the Ink

Ink Bottle Handling Precautions

Read the following instructions before refilling ink.

Storing precautions for ink

- ❏ Keep the ink bottles out of direct sunlight.
- ❏ Do not store the ink bottles in high or freezing temperatures.
- ❏ Epson recommends using the ink bottle before the date printed on the package.
- ❏ When storing or transporting an ink bottle, do not tilt the bottle and do not subject it to impacts or temperature changes. Otherwise, ink may leak even if the cap on the ink bottle is tightened securely. Be sure to keep the ink bottle upright when tightening the cap, and take precautions to prevent ink from leaking when transporting the bottle, for example, putting the bottle in a bag.
- ❏ After bringing an ink bottle inside from a cold storage site, allow it to warm up at room temperature for at least three hours before using it.
- ❏ Do not open the ink bottle package until you are ready to fill the ink tank. The ink bottle is vacuum packed to maintain its reliability. If you leave an ink bottle unpacked for a long time before using it, normal printing may not be possible.
- ❏ Once you open an ink bottle, we recommend using it as soon as possible.

Handling precautions for refilling ink

- ❏ To ensure you receive premium print quality and to help protect your print head, a variable ink safety reserve remains in the ink tank when your printer indicates to refill ink. The yields quoted for you do not include this reserve.
- ❏ For optimum print results do not maintain low ink levels for extended periods of time.
- ❏ Use ink bottles with the correct part code for this printer.
- ❏ The ink for this printer must be handled carefully. Ink may splatter when the ink tanks are being filled or refilled with ink. If ink gets on your clothes or belongings, it may not come off.
- ❏ Do not shake too vigorously or squeeze the ink bottles.
- ❏ Prolonged use of the printer when the ink level is below the lower line could damage the printer. Fill the ink tank to the upper line while the printer is not operating. To display the correct ink level estimates, reset the ink level after filling the tank.
- ❏ To obtain optimum printing results, refill the ink tanks to the upper line at least once every year.

Ink consumption

- ❏ To maintain optimum print head performance, some ink is consumed from all ink tanks during maintenance operations such as print head cleaning. Ink may also be consumed when you turn the printer on.
- ❏ When printing in monochrome or grayscale, color inks instead of black ink may be used depending on the paper type or print quality settings. This is because a mixture of color inks is used to create black.
- ❏ The ink in the ink bottles supplied with your printer is partly used during initial setup. In order to produce high quality printouts, the print head in your printer will be fully charged with ink. This one-off process consumes a quantity of ink and therefore these bottles may print fewer pages compared to subsequent ink bottles.

- ❏ Quoted yields may vary depending on the images that you are printing, the paper type that you are using, the frequency of your prints and environmental conditions such as temperature.
- ❏ Visually check ink levels in the actual ink tanks. Prolonged use of the printer when the ink is expended could damage the printer. Epson recommends filling the ink tank to the upper line when the printer is not operating to reset the ink level.

Refilling the Ink Tanks

1. Close the document cover if it is open.
2. Open the scanner unit with both hands until it locks.

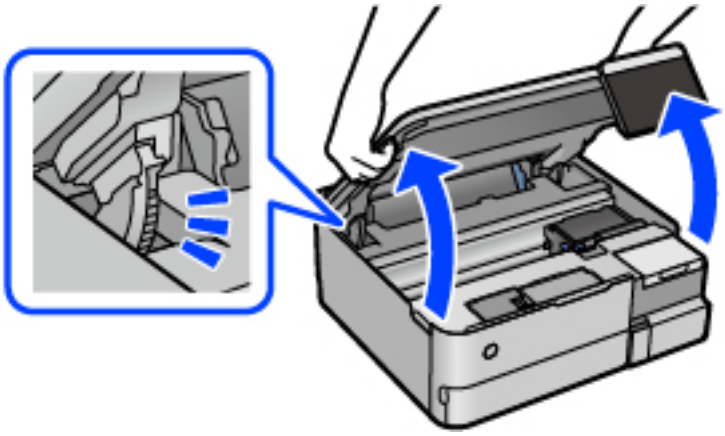

3. Open the ink tank cover.

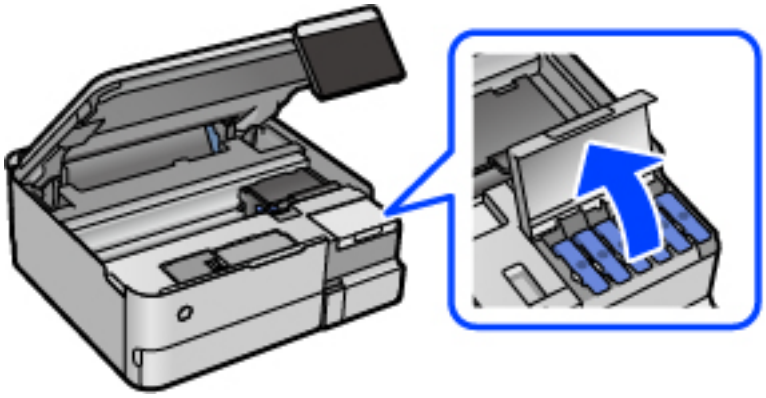

Read all of the usage precautions for filling ink on the screen, and then proceed to the next screen.

4. Open the cap of the ink tank.

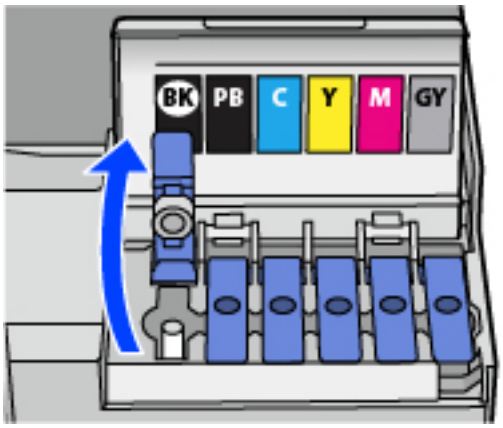

> ***Important:***
> *Make sure that the color of the ink tank matches the ink color that you want to refill.*

5. While holding the ink bottle upright, turn the cap slowly to remove it.

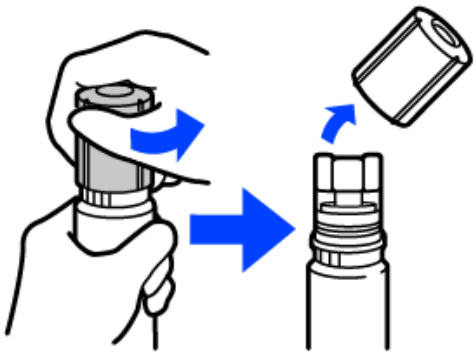

> ***Important:***
> - *Epson recommends the use of genuine Epson ink bottles.*
> - *Be careful not to spill any ink.*

6. Check the upper line (a) in the ink tank.

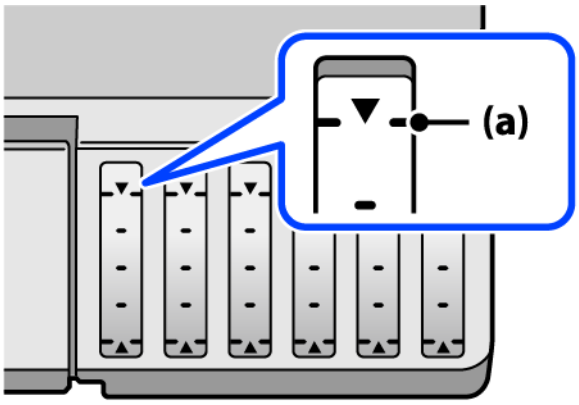

7. Align the top of the ink bottle with the filling port, and then insert it straight into the port to fill ink until it stops automatically at the upper line.

   When you insert the ink bottle into the filling port for the correct color, ink starts pouring and the flow stops automatically when the ink reaches the upper line.

   If the ink does not start flowing into the tank, remove the ink bottle and reinsert it. However, do not remove and reinsert the ink bottle when the ink has reached the upper line; otherwise ink may leak.

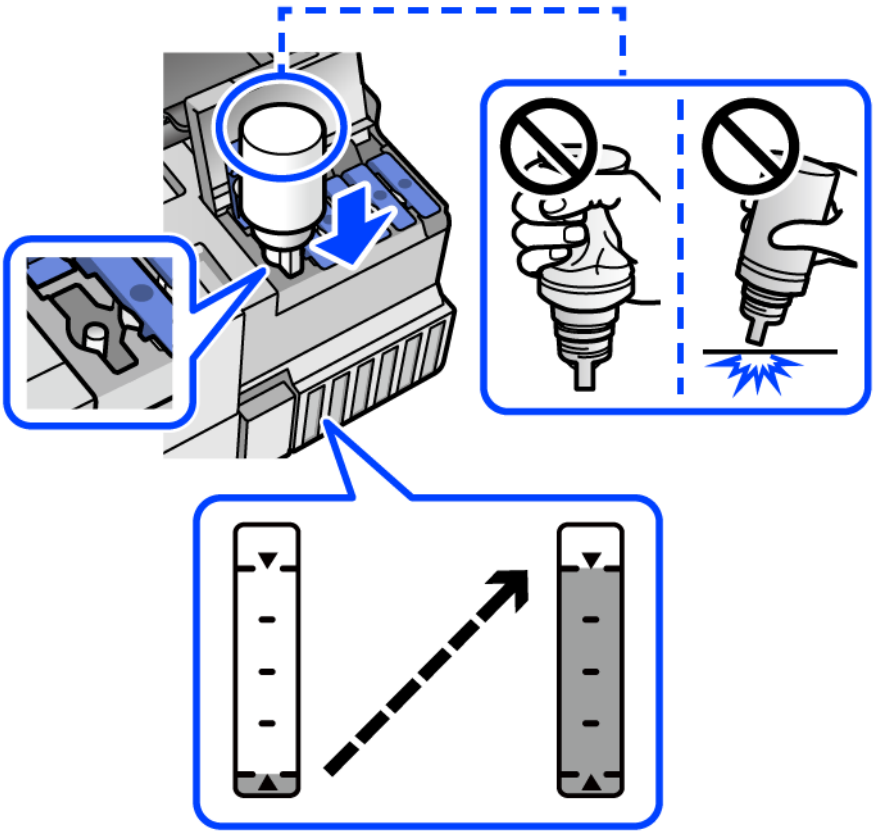

8. When you have finished filling the ink, remove the ink bottle.

> ***Important:***
> *Do not leave the ink bottle inserted; otherwise the bottle may be damaged or ink may leak.*

Note:
If any ink remains in the ink bottle, tighten the cap and store the bottle upright for later use.

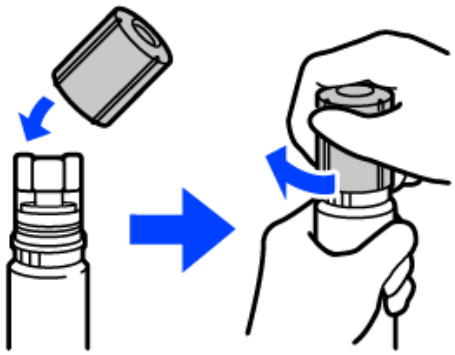

9. Close the ink tank cap securely.

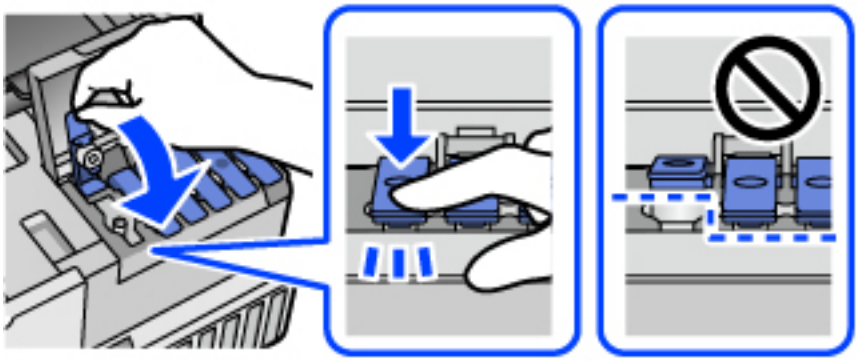

10. Close the ink tank cover firmly.

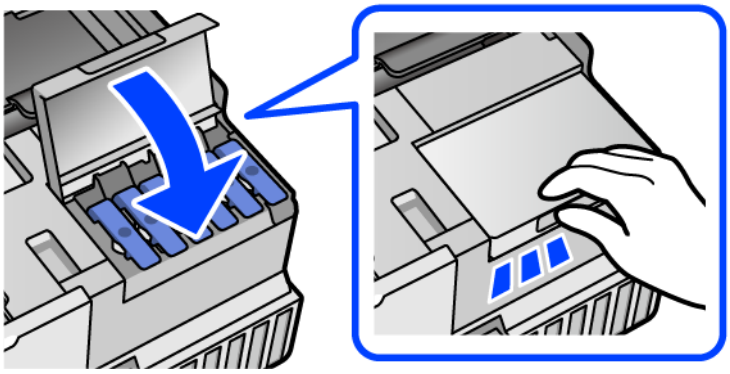

11. Close the scanner unit.

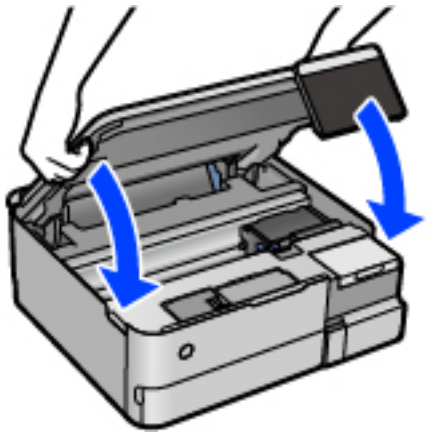

Note:
The scanner unit is designed to close slowly and resist a little as a precaution against catching fingers. Continue to close even if you feel some resistance.

12. Follow the on-screen instructions to set the ink level of the color of the ink you refilled.

Important:
Even if you do not refill ink up to the upper line on the ink tank, you can continue using the printer. To keep your printer operating at its best, however, fill ink tank up to the upper line and reset the ink level immediately.

Related Information

➡ "Ink Bottle Codes" on page 258
➡ "Ink Bottle Handling Precautions" on page 204
➡ "Cleaning Spilled ink" on page 145

Notes on Resetting the Ink Level

Be sure to reset the ink level after refilling the ink.

If you refilled two or more ink tanks, you need to select all of the tanks that you refilled and reset their ink levels.

Unless you reset the ink level, the ink level displayed does not change even after refilling the ink.

Related Information

➡ "Checking the Status of Consumable" on page 130

It is Time to Replace the Maintenance Box

Maintenance Box Handling Precautions

Read the following instructions before replacing the maintenance box.

- ❏ Do not touch the green chip on the side of the maintenance box. Doing so may prevent normal operation and printing.
- ❏ Do not replace the maintenance box during printing; otherwise, ink may leak.
- ❏ Do not remove the maintenance box or open its cover except when replacing the maintenance box; otherwise ink may leak.
- ❏ Do not reuse a maintenance box which has been removed and left detached for a long period. Ink inside the box will have solidified and no more ink can be absorbed.
- ❏ Do not tilt the used maintenance box until after it is sealed in the plastic bag; otherwise ink may leak.
- ❏ Do not store the maintenance box in high or freezing temperatures.
- ❏ Keep the maintenance box out of direct sunlight.
- ❏ Do not drop the maintenance box or subject it to strong shocks.
- ❏ Do not touch the openings in the maintenance box as you may get smeared with ink.

Replacing a Maintenance Box

In some print cycles a very small amount of surplus ink may be collected in the maintenance box. To prevent ink leakage from the maintenance box, the printer is designed to stop printing when the absorbing capacity of the maintenance box has reached its limit. Whether and how often this is required will vary according to the number of pages you print, the type of material that you print and the number of cleaning cycles that the printer performs.

When a message is displayed prompting you to replace the maintenance box, refer to the animations displayed on the control panel. The need for replacement of the box does not mean that your printer has ceased to operate in accordance with its specifications. The Epson warranty does not cover the cost of this replacement. It is a user-serviceable part.

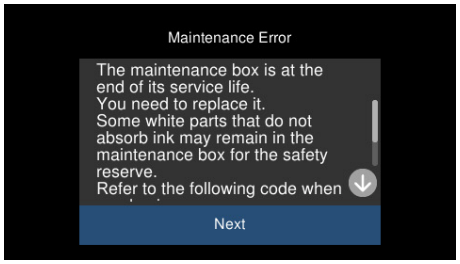

Note:

- ❏ *When the maintenance box is full, you cannot print and clean the print head until it is replaced to avoid ink leakage. However, you can perform operations that do not use ink such as scanning.*
- ❏ *When the following screen is displayed, the part cannot be replaced by users. Contact Epson support.*

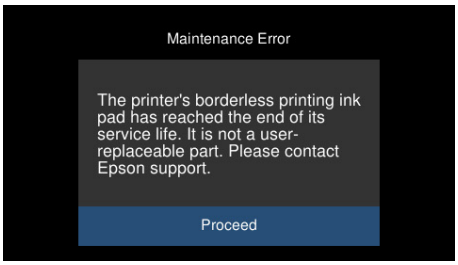

Related Information

➡ "Maintenance Box Code" on page 259
➡ "Maintenance Box Handling Precautions" on page 209

Printing, Copying, and Scanning Quality is Poor

Print Quality is Poor

Color Missing, Banding, or Unexpected Colors Appear in Printout

The print head nozzles may be clogged.

Solutions

Perform a nozzle check and then clean the print head if any of the print head nozzles are clogged. If you have not used the printer for a long time, the print head nozzles may be clogged.

➡ "Checking and Cleaning the Print Head" on page 133

Print Quality is Poor with Black Ink

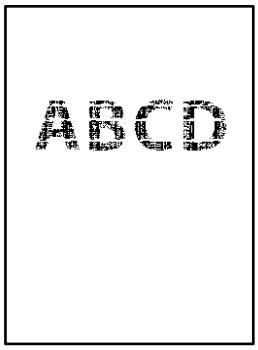

The print head nozzles may be clogged.

❑ Perform a nozzle check to see if the print head nozzles are clogged. Perform a nozzle check, and then clean the print head if any of the print head nozzles are clogged. If you have not used the printer for a long time, the print head nozzles may be clogged and ink drops may not be discharged.

"Checking and Cleaning the Print Head" on page 133

❏ If you cannot solve the problem using head cleaning, you can print immediately with a mixture of color inks to create composite black by changing the following settings in Windows.

Click **Extended Settings** on the printer driver's **Maintenance** tab. If you select **Use a Mixture of Color Inks to Create Black**, you can print at **Standard** print quality when the **Paper Type** is **Plain paper** or **Envelope**.

Note that this feature cannot solve nozzle clogging. To solve nozzle clogging, we recommend contacting Epson support for repairs.

Colored Banding Appears at Intervals of Approximately 2.5 cm

The following causes can be considered.

The paper type in the printer settings is incorrect.

Solutions

Make sure the paper type in the printer settings matches the actual paper type.

The print quality is set too low.

Solutions

When printing on plain paper, use a higher quality setting.

❏ Control panel

Select **High** as the **Quality** setting.

"Menu Options for Paper and Print Settings" on page 53

❏ Windows

Select **High** from **Quality** on the printer driver's **Main** tab.

❏ Mac OS

Select **Fine** as **Print Quality** from the print dialog's **Print Settings** menu.

The print head position is out of alignment.

Solutions

Select the **Maintenance** > **Print Head Alignment** > **Horizontal Alignment** menu on the control panel to align the print head.

Blurry Prints, Vertical Banding, or Misalignment

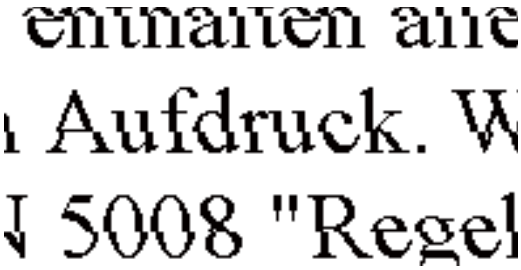

The following causes can be considered.

The print head position is out of alignment.

Solutions

Select the **Maintenance** > **Print Head Alignment** > **Vertical Alignment** menu on the control panel to align the print head.

The bidirectional printing setting is enabled.

Solutions

If print quality does not improve even after aligning the print head, disable the bidirectional setting.

During bidirectional (or high speed) printing, the print head prints while moving in both directions, and vertical lines may be misaligned. Disabling this setting may slow down printing speed but improve print quality.

- Control panel

  Disable **BidirectionalSettings** in **Settings** > **Printer Settings**.

- Windows

  Clear **Bidirectional Printing** on the printer driver's **More Options** tab.

- Mac OS

  Select **System Preferences** from the Apple menu > **Printers & Scanners** (or **Print & Scan**, **Print & Fax**), and then select the printer. Click **Options & Supplies** > **Options** (or **Driver**). Select **Off** as the **High Speed Printing** setting.

The Printout Comes Out as a Blank Sheet

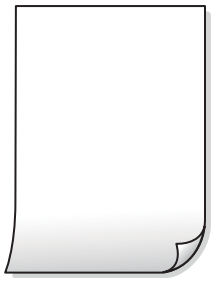

The print head nozzles may be clogged.

Solutions

Perform the nozzle check, and then try Power Cleaning if the print head nozzles are clogged.

➡ "Running Power Cleaning" on page 134

The print settings and the paper size loaded in the printer are different.

Solutions

Change the print settings according to the paper size loaded in the paper cassette. Load paper in the paper cassette that matches the print settings.

Multiple sheets of paper are fed into the printer at the same time.

Solutions

See the following to prevent multiple sheets of paper from being fed into the printer at the same time.

➡ "Several Sheets of Paper are Fed at a Time" on page 161

Paper Is Smeared or Scuffed

One of the following situations may be the cause.

The paper is loaded incorrectly.

Solutions

When horizontal banding (perpendicular to the printing direction) appears, or the top or bottom of the paper is smeared, load paper in the correct direction and slide the edge guides to the edges of the paper.

➡ "Loading Paper" on page 35

The paper path is smeared.

Solutions

When vertical banding (parallel to the printing direction) appears, or the paper is smeared, clean the paper path.

➡ "Cleaning the Paper Path for Ink Smears (when the Surface of the Print Result is Smeared Vertically)" on page 136
➡ "Cleaning the Paper Path for Ink Smear (when the Back of the Print Result is Dirty)" on page 137

The paper is curled.

Solutions

Place the paper on a flat surface to check if it is curled. If it is, flatten it.

The print head is rubbing the surface of the paper.

Solutions

When printing on thick paper, the print head is close to the printing surface and the paper may be scuffed. In this case, enable the reduce scuff setting. If you enable this setting, print quality may decline or printing may slow down.

- Control panel

  Select **Settings** > **Printer Settings** from the home screen, and then enable **Thick Paper**.

- Windows

  Click **Extended Settings** on the printer driver's **Maintenance** tab, and then select **Thick Paper and Envelopes**.

- Mac OS

  Select **System Preferences** from the Apple menu > **Printers & Scanners** (or **Print & Scan**, **Print & Fax**), and then select the printer. Click **Options & Supplies** > **Options** (or **Driver**). Select **On** as the **Thick paper and envelopes** setting.

The back of the paper was printed before the side that had already been printed was dry.

Solutions

When performing manual 2-sided printing, make sure that the ink is completely dry before reloading the paper.

When printing using automatic 2-sided printing, the print density is too high and the drying time is too short.

Solutions

When using the automatic 2-sided printing feature and printing high density data such as images and graphs, lower the print density and increase the drying time.

➡ "Printing on 2-Sides" on page 62
➡ "Printing on 2-Sides" on page 62

Printed Photos are Sticky

The wrong side of the photo paper was used.

Solutions

Make sure the paper size in the printer settings matches the actual paper size. If you print on the wrong side of the photo paper, you need to clean the paper path.

➡ "Cleaning the Paper Path for Ink Smears (when the Surface of the Print Result is Smeared Vertically)" on page 136

Images or Photos Contain Unexpected Colors

One of the following situations may be the cause.

The print head nozzles may be clogged.

Solutions

Perform a nozzle check and then clean the print head if any of the print head nozzles are clogged. If you have not used the printer for a long time, the print head nozzles may be clogged.

➡ "Checking and Cleaning the Print Head" on page 133

Color correction has been applied.

Solutions

When printing from the control panel or from the Windows printer driver, the Epson auto photo adjustment setting (PhotoEnhance) is applied by default depending on the paper type. Try change the setting.

❑ Control Panel

Change the **Enhance** setting from **Auto** to **People**, **Night Scene**, or **Landscape**. If changing the setting does not work, turn off **PhotoEnhance** by selecting **Enhance Off**.

❑ Windows printer driver

On the **More Options** tab, select **Custom** in **Color Correction**, and then click **Advanced**. Change the **Scene Correction** setting from **Automatic** to any other option. If changing the setting does not work, use any color correction method other than **PhotoEnhance** in **Color Management**.

➡ "Menu Options for Editing Photos" on page 54
➡ "Adjusting the Print Color" on page 76

Colors in the Printout Differ from Those on the Display

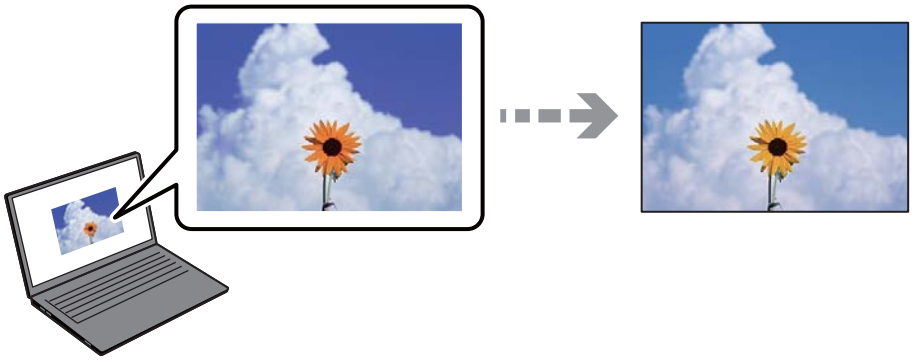

The color properties for the display device you are using have not been adjusted correctly.

Solutions

Display devices such as computer screens have their own display properties. If the display is unbalanced, the image are not displayed with proper brightness and colors. Adjust the properties of the device. Next, perform the following.

❏ Windows

Access the printer driver window, select **Custom** as the **Color Correction** setting on the **More Options** tab, and then click **Advanced**. Select **EPSON Standard** as the **Color Mode** setting.

❏ Mac OS

Access the print dialog. Select **Color Options** from the pop-up menu, and then click the arrow next to **Advanced Settings**. Select **EPSON Standard** as the **Mode** setting.

The display device is reflecting external light.

Solutions

Avoid direct sunlight and view the image in an environment where the appropriate lighting is assured.

The display device has a high resolution.

Solutions

Colors may differ from what you see on smart devices such as smart phones or tablets with high-resolution displays.

The display device and the printer have a different process of producing colors.

Solutions

Colors on a display are not quite identical to those on paper because the display device and the printer have a different process of producing colors. Adjust the color properties so that the colors match more closely.

Cannot Print Without Margins

The borderless feature is not enabled in the print settings.

Solutions

Enable the borderless feature in the print settings. If you select a paper type that does not support borderless printing, you cannot select **Borderless**. Select a paper type that supports borderless printing.

❏ Control panel

Select **Borderless** as **Border Setting**.

❏ Windows

Select **Borderless** on the printer driver's **Main** tab.

❏ Mac OS

Select a borderless paper size from **Paper Size**.

➡ "Menu Options for Paper and Print Settings" on page 53
➡ "Paper for Borderless Printing" on page 256

The Edges of the Image are Cropped During Borderless Printing

Because the image is slightly enlarged, the area beyond the paper size boundaries is cropped.

Solutions

Select a smaller enlargement setting.

❏ Control panel

Change the **Expansion** setting.

❏ Windows

Click **Settings** next to the **Borderless** checkbox on the printer driver's **Main** tab, and then change the setting.

❏ Mac OS

Change the **Expansion** setting from the print dialog's **Print Settings** menu.

➡ "Menu Options for Paper and Print Settings" on page 53

The Position, Size, or Margins of the Printout Are Incorrect

One of the following situations may be the cause.

The paper is loaded incorrectly.

Solutions

Load paper in the correct direction, and slide the edge guides against the edges of the paper.

➡ "Loading Paper" on page 35

The paper size in the printer settings is incorrect.

Solutions

Make sure the paper size in the printer settings matches the actual paper size.

The margin setting in the application software is not within the printable area.

Solutions

Adjust the margin setting in the application so that it falls within the printable area.

➡ "Printable Area" on page 274

The Printing Position of Photo Stickers is Incorrect

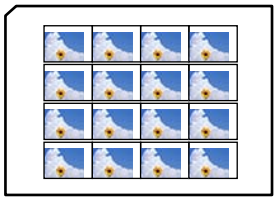

The printing position needs to be adjusted.

Solutions

Adjust the printing position in the **Settings** > **Printer Settings** > **Stickers** menu on the control panel.

Printed Characters Are Incorrect or Garbled

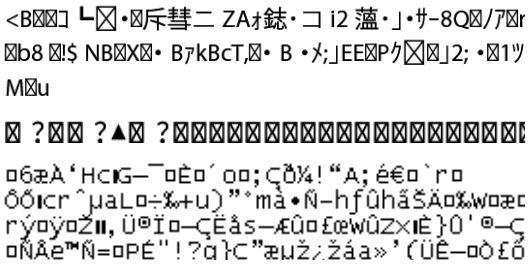

One of the following situations may be the cause.

The USB cable is not connected correctly.

Solutions

Connect the USB cable securely to the printer and the computer.

There is a job waiting to be printed.

Solutions

Cancel any paused print jobs.

The computer has been manually put into Hibernate or Sleep mode while printing.

Solutions

Do not put the computer manually into **Hibernate** or **Sleep** mode while printing. Pages of garbled text may be printed the next time you start the computer.

The Printed Image Is Inverted

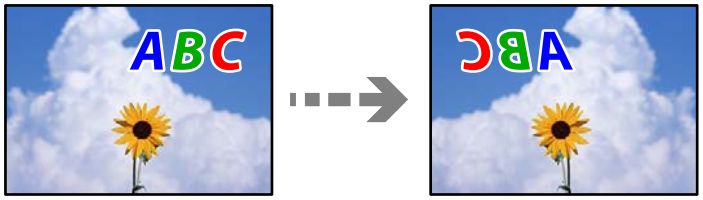

The invert option is enabled in the print settings.

Solutions

Clear any mirror image settings in the printer driver or the application.

- Windows

  Clear **Mirror Image** on the printer driver's **More Options** tab.

- Mac OS

  Clear **Mirror Image** from the print dialog's **Print Settings** menu.

Mosaic-Like Patterns Appear in the Printout

Low resolution images or photos were printed.

Solutions

When printing images or photos, print using high-resolution data. Images on web sites are often low resolution even if they look good enough on the display, and so print quality may decline when you print them.

Copy Quality is Poor

Banding or Unexpected Colors Appear, or Colors Are Missing

The print head nozzles may be clogged.

Solutions

Perform a nozzle check and then clean the print head if any of the print head nozzles are clogged. If you have not used the printer for a long time, the print head nozzles may be clogged.

➡ "Checking and Cleaning the Print Head" on page 133

The printer may be set to Draft print quality.

Solutions

Change the print quality setting to something other than Draft, and then print again.

Colored Banding Appears at Intervals of Approximately 2.5 cm

The following causes can be considered.

The paper type in the printer settings is incorrect.

Solutions

Make sure the paper type in the printer settings matches the actual paper type.

The print quality is set too low.

Solutions

When copying on plain paper, use a higher quality setting.

Select **Advanced Settings** > **Quality** and then select **High** in each copy menu.

The print head position is out of alignment.

Solutions

Select the **Maintenance** > **Print Head Alignment** > **Horizontal Alignment** menu on the control panel to align the print head.

Blurry Copies, Vertical Banding, or Misalignment

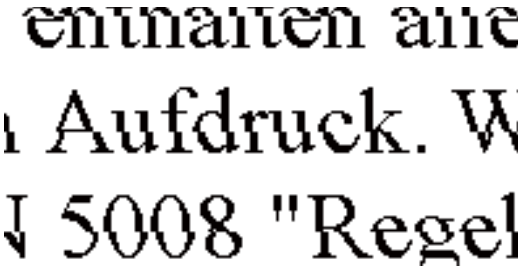

One of the following situations may be the cause.

The print head position is out of alignment.

Solutions

Select the **Maintenance** > **Print Head Alignment** > **Vertical Alignment** menu on the control panel to align the print head.

Bidirectional printing is enabled.

Solutions

If the print quality does not improve even after aligning the print head, select **Settings** > **Printer Settings** on the control panel and then disable **Bidirectional**.

During bidirectional (or high speed) printing, the print head prints while moving in both directions, and vertical lines may be misaligned. Disabling this setting may slow down printing speed.

The Printout Comes Out as a Blank Sheet

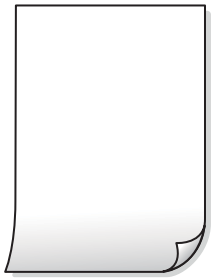

The print head nozzles may be clogged.

Solutions

Perform the nozzle check, and then try Power Cleaning if the print head nozzles are clogged.

➡ "Running Power Cleaning" on page 134

The print settings and the paper size loaded in the printer are different.

Solutions

Change the print settings according to the paper size loaded in the paper cassette. Load paper in the paper cassette that matches the print settings.

Multiple sheets of paper are fed into the printer at the same time.

Solutions

See the following to prevent multiple sheets of paper from being fed into the printer at the same time.

➡ "Several Sheets of Paper are Fed at a Time" on page 161

Paper Is Smeared or Scuffed

One of the following situations may be the cause.

The paper is loaded incorrectly.

Solutions

When horizontal banding (perpendicular to the printing direction) appears, or the top or bottom of the paper is smeared, load paper in the correct direction and slide the edge guides to the edges of the paper.

➡ "Loading Paper" on page 35

The paper path is smeared.

Solutions

When vertical banding (parallel to the printing direction) appears, or the paper is smeared, clean the paper path.

➡ "Cleaning the Paper Path for Ink Smears (when the Surface of the Print Result is Smeared Vertically)" on page 136
➡ "Cleaning the Paper Path for Ink Smear (when the Back of the Print Result is Dirty)" on page 137

The paper is curled.

Solutions

Place the paper on a flat surface to check if it is curled. If it is, flatten it.

The print head is rubbing the surface of the paper.

Solutions

If the printouts are dirty when copying thick paper, enable **Thick Paper** in the **Settings** > **Printer Settings** menu on the control panel. If you enable this setting, copy quality may decline or may slow down.

Copied Photos are Sticky

The copy was made on the wrong side of the photo paper.

Solutions

Make sure you are copying on the printable side. If you copy on the wrong side of the photo paper, you need to clean the paper path.

➡ "Loading Paper" on page 35

➡ "Cleaning the Paper Path for Ink Smears (when the Surface of the Print Result is Smeared Vertically)" on page 136

Cannot Copy Without Margins

The borderless feature is not enabled.

Solutions

Select **Various Prints** > **Various copies** > **Copy/Restore Photos** > **Border Setting** > **Borderless** on the control panel. If you select a paper that does not support borderless printing, you cannot enable borderless settings. Select a paper type that supports borderless printing.

➡ "Copying Without Margins" on page 109

➡ "Paper for Borderless Printing" on page 256

The edges of the Image are Cropped During Borderless Copying

Because the image is slightly enlarged, the area beyond the paper size boundaries is cropped.

Solutions

Select a smaller enlargement setting.

❏ Copying Photos

Select **Various Prints** > **Various copies** > **Copy/Restore Photos** > **Border Setting** > **Borderless** on the control panel and then change **Expansion** setting.

❏ Borderless Copying

Select **Various Prints** > **Various copies** > **Borderless Copy** > **Advanced Settings** > **Expansion** on the control panel, and then change the setting.

➡ "Copying Without Margins" on page 109

The Position, Size, or Margins of the Copies are Incorrect

One of the following situations may be the cause.

The paper is loaded incorrectly.

Solutions

Load paper in the correct direction, and slide the edge guides against the edges of the paper.

➡ "Loading Paper" on page 35

The originals are not placed correctly.

Solutions

❏ Make sure the original is placed correctly against the alignment marks.

❏ If the edge of the scanned image is missing, move the original slightly away from the edge of the scanner glass.

➡ "Placing Originals" on page 40

There is some dust or stains on the scanner glass.

Solutions

Clean the scanner glass and the document cover using a dry, soft, clean cloth. If there is dust or stains around the originals on the glass, the copy area may extend to include the dust or stains, resulting in the wrong copying position or small images.

➡ "Cleaning the Scanner Glass" on page 139

The paper size in the printer settings is incorrect.

Solutions

Make sure the paper size in the printer settings matches the actual paper size.

The Copying Position on a CD/DVD is Incorrect

One of the following situations may be the cause.

The printing position needs to be adjusted.

Solutions

Select **Settings** > **Printer Settings** > **CD/DVD** menu on the control panel and adjust the printing position.

There is some dust or stains on the scanner glass.

Solutions

Clean the scanner glass and the document cover using a dry, soft, clean cloth. If there is dust or stains around the originals on the glass, the copy area may extend to include the dust or stains, resulting in the wrong copying position or small images.

➡ "Cleaning the Scanner Glass" on page 139

Uneven Colors, Smears, Dots, or Straight Lines Appear in the Copied Image

One of the following situations may be the cause.

The paper path is dirty.

Solutions

Clean the paper path.

➡ "Cleaning the Paper Path for Ink Smears (when the Surface of the Print Result is Smeared Vertically)" on page 136

There is dust or dirt on the originals or the scanner glass.

Solutions

Remove any dust or dirt from the originals, and clean the scanner glass.

➡ "Cleaning the Scanner Glass" on page 139

The original was pressed with too much force.

Solutions

If you press with too much force, blurring, smudges, and spots may occur.

Do not press with too much force on the original or the document cover.

➡ "Placing Originals" on page 40

The copy density setting is too high.

Solutions

Lower the copy density setting.

➡ "Menu Options for Copying" on page 100

Moiré (Cross-Hatch) Patterns Appear in the Copied Image

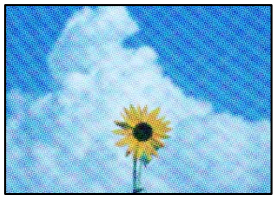

If the original is a printed document such as a magazine or a catalog, a dotted moiré pattern appears.

Solutions

Change the reduce and enlarge setting. If a moiré pattern still appears, place the original at a slightly different angle.

➡ "Menu Options for Copying" on page 100

An Image of the Reverse Side of the Original Appears in the Copied Image

One of the following situations may be the cause.

When scanning thin originals, images on the back may be scanned at the same time.

Solutions

Place the original on the scanner glass and then place a piece of black paper over it.

➡ "Placing Originals" on page 40

The copy density setting is too high.

Solutions

Lower the copy density setting.

➡ "Menu Options for Copying" on page 100

Multiple Originals are Copied onto a Single Sheet

The gap between originals is too small.

Solutions

When you place multiple originals on the scanner glass to copy them separately, but they are copied onto a single sheet, place the originals at least 5 mm apart. If the problem continues, place one original at a time.

➡ "Copying Photos" on page 105

Scanned Image Problems

Uneven Colors, Dirt, Spots, and so on Appear in the Scanned Image

There is dust or dirt on the originals or the scanner glass.

Solutions

Remove any dust or dirt from the originals, and clean the scanner glass.

➡ "Cleaning the Scanner Glass" on page 139

The original was pressed with too much force.

Solutions

If you press with too much force, blurring, smudges, and spots may occur.

Do not press with too much force on the original or the document cover.

➡ "Placing Originals" on page 40

An Image of the Reverse Side of the Original Appears in the Scanned Image

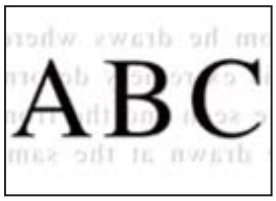

When scanning thin originals, images on the back may be scanned at the same time.

Solutions

Place the original on the scanner glass and then place a piece of black paper over it.

➡ "Placing Originals" on page 40

Cannot Scan the Correct Area

The originals are not placed correctly.

Solutions

- ❑ Make sure the original is placed correctly against the alignment marks.
- ❑ If the edge of the scanned image is missing, move the original slightly away from the edge of the scanner glass.

➡ "Placing Originals" on page 40

There is dust or dirt on the scanner glass.

Solutions

When scanning from the control panel and selecting auto scan area cropping function, remove any trash or dirt from the scanner glass and document cover. If there is any trash or dirt around the original, the scanning range expands to include it.

➡ "Cleaning the Scanner Glass" on page 139

When scanning multiple originals using Epson ScanSmart, there is not enough of a gap between the originals.

Solutions

When placing multiple originals on the scanner glass, make sure there is a gap of at least 20 mm (0.8 in.) between the originals.

➡ "Scanning Multiple Photos at the Same Time" on page 125

Cannot Solve Problems in the Scanned Image

Check the following if you have tried all of the solutions and have not solved the problem.

There are problems with the scanning software settings.

Solutions

Use Epson Scan 2 Utility to initialize the settings for the scanner software.

Note:
Epson Scan 2 Utility is an application supplied with the scanner software.

1. Start the Epson Scan 2 Utility.
   - ❑ Windows 10
     Click the start button, and then select **EPSON** > **Epson Scan 2 Utility**.
   - ❑ Windows 8.1/Windows 8
     Enter the application name in the search charm, and then select the displayed icon.
   - ❑ Windows 7/Windows Vista/Windows XP
     Click the start button, and then select **All Programs** or **Programs** > **EPSON** > **Epson Scan 2** > **Epson Scan 2 Utility**.
   - ❑ Mac OS
     Select **Go** > **Applications** > **Epson Software** > **Epson Scan 2 Utility**.
2. Select the **Other** tab.
3. Click **Reset**.

If initialization does not solve the problem, uninstall and re-install the scanner software.

➡ "Installing or Uninstalling Applications Separately" on page 146

Cannot Solve Problem

If you cannot solve the problem after trying all of the solutions, contact Epson support.

If you cannot solve printing or copying problems, see the following related information.

Related Information

➡ "Cannot Solve Printing or Copying Problems" on page 231

Cannot Solve Printing or Copying Problems

Try the following problems in order starting at the top until you solve the problem.

❏ Make sure you match the paper type loaded in the printer and the paper type set on the printer to the paper type settings in the printer driver.

"Paper Size and Type Settings" on page 33

❏ Use a higher quality setting on the control panel or the printer driver.

❏ Align the print head.

"Aligning the Print Head" on page 135

❏ Run a nozzle check to see if the print head nozzles are clogged.

If there are missing segments in the nozzle check pattern, the nozzles may be clogged. Repeat head cleaning and the nozzle check alternately 3 times and check if the clogging has cleared.

Note that print head cleaning uses some ink.

"Checking and Cleaning the Print Head" on page 133

❏ Turn off the printer, wait for at least 12 hours, and then check if the clogging has cleared.

If the problem is clogging, leaving the printer for a while without printing may solve the problem.

You can check the following items while the printer is off.

❏ Check that you are using genuine Epson ink bottles.

Try to use genuine Epson ink bottles. The use of non-genuine ink bottles may cause print quality to decline.

❏ Check if the translucent film is smeared.

If there are smears on the translucent film, carefully wipe off the smear.

"Cleaning the Translucent Film" on page 140

❏ Make sure that there are no paper fragments left inside the printer.

When you remove the paper, do not touch the translucent film with your hand or the paper.

❏ Check the paper.

Check if the paper is curled or loaded with the printable side facing up.

"Paper Handling Precautions" on page 32

"Available Paper and Capacities" on page 253

"Unavailable Paper Types" on page 258

❏ If you turn off the printer, wait for at least 12 hours, and if print quality has still not improved, run Power Cleaning.

"Running Power Cleaning" on page 134

If you cannot solve the problem by checking the solutions above, you may need to request repairs. Contact Epson support.

Adding or Replacing the Computer or Devices

Connecting to a Printer that has been Connected to the Network. 233

Re-setting the Network Connection. 234

Connecting a Smart Device and Printer Directly (Wi-Fi Direct). 240

Checking the Network Connection Status. 244

Connecting to a Printer that has been Connected to the Network

When the printer has already been connected to the network, you can connect a computer or a smart device to the printer over the network.

Using a Network Printer from a Second Computer

We recommend using the installer to connect the printer to a computer. You can run the installer using one of the following methods.

❏ Setting up from the website

Access the following website, and then enter the product name. Go to **Setup**, and then start setting up.

https://epson.sn

❏ Setting up using the software disc (only for the models that come with a software disc and users with Windows computers with disc drives.)

Insert the software disc into the computer, and then follow the on-screen instructions.

Selecting the Printer

Follow the on-screen instructions until the following screen is displayed, select the printer name you want to connect to, and then click **Next**.

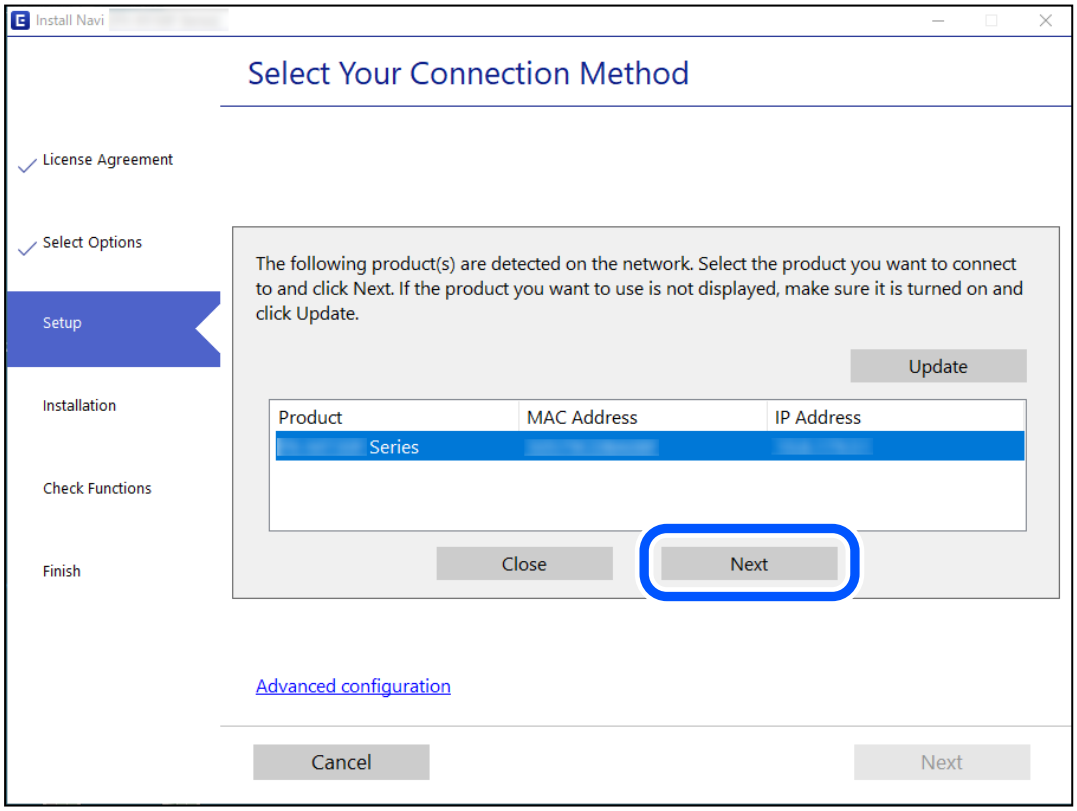

Follow the on-screen instructions.

Using a Network Printer from a Smart Device

You can connect a smart device to the printer using one of the following methods.

Connecting over a wireless router

Connect the smart device to the same Wi-Fi network (SSID) as the printer.

See the following for more details.

"Making Settings for Connecting to the Smart Device" on page 234

Connecting by Wi-Fi Direct

Connect the smart device to the printer directly without a wireless router.

See the following for more details.

"Connecting a Smart Device and Printer Directly (Wi-Fi Direct)" on page 240

Re-setting the Network Connection

This section explains how to make the network connection settings and change the connection method when replacing the wireless router or the computer.

When Replacing the Wireless Router

When you replace the wireless router, make settings for the connection between the computer or the smart device and the printer.

You need to make these settings if you change your Internet service provider and so on.

Making Settings for Connecting to the Computer

We recommend using the installer to connect the printer to a computer. You can run the installer using one of the following methods.

❏ Setting up from the website

Access the following website, and then enter the product name. Go to **Setup**, and then start setting up.

https://epson.sn

❏ Setting up using the software disc (only for the models that come with a software disc and users with Windows computers with disc drives.)

Insert the software disc into the computer, and then follow the on-screen instructions.

Making Settings for Connecting to the Smart Device

You can use the printer from a smart device when you connect the printer to the same Wi-Fi network (SSID) as the smart device. To use the printer from a smart device, set up from the following website. Access to the website from the smart device that you want to connect to the printer.

https://epson.sn > **Setup**

When Changing the Computer

When changing the computer, make connection settings between the computer and the printer.

Making Settings for Connecting to the Computer

We recommend using the installer to connect the printer to a computer. You can run the installer using one of the following methods.

❏ Setting up from the website

Access the following website, and then enter the product name. Go to **Setup**, and then start setting up.

https://epson.sn

❏ Setting up using the software disc (only for the models that come with a software disc and users with Windows computers with disc drives.)

Insert the software disc into the computer, and then follow the on-screen instructions.

Follow the on-screen instructions.

Changing the Connection Method to the Computer

This section explains how to change the connection method when the computer and the printer have been connected.

Changing the Network Connection from Ethernet to Wi-Fi

Change the Ethernet connection to Wi-Fi connection from the printer's control panel. The changing connection method is basically the same as the Wi-Fi connection settings.

Related Information

➡ "Making Wi-Fi Settings from the Control Panel" on page 236

Changing the Network Connection from Wi-Fi to Ethernet

Follow the steps below to change from a Wi-Fi connection to an Ethernet connection.

1. Tap **Settings** on the home screen.
2. Tap **Network Settings** > **Wired LAN Setup**.
3. Tap **Start Setup**.
4. Check the message, and then tap **OK**.
5. Connect the printer to the router with an Ethernet cable.

Changing from USB to a Network Connection

Using the installer and re-set up in a different connection method.

❏ Setting up from the website

Access the following website, and then enter the product name. Go to **Setup**, and then start setting up.

https://epson.sn

❏ Setting up using the software disc (only for the models that come with a software disc and users with Windows computers with disc drives.)

Insert the software disc into the computer, and then follow the on-screen instructions.

Selecting Change the Connection Methods

Follow the on-screen instructions until the following screen is displayed.

Select the network connection that you want to use, **Connect via wireless network (Wi-Fi)** or **Connect via wired LAN (Ethernet)**, and then click **Next**.

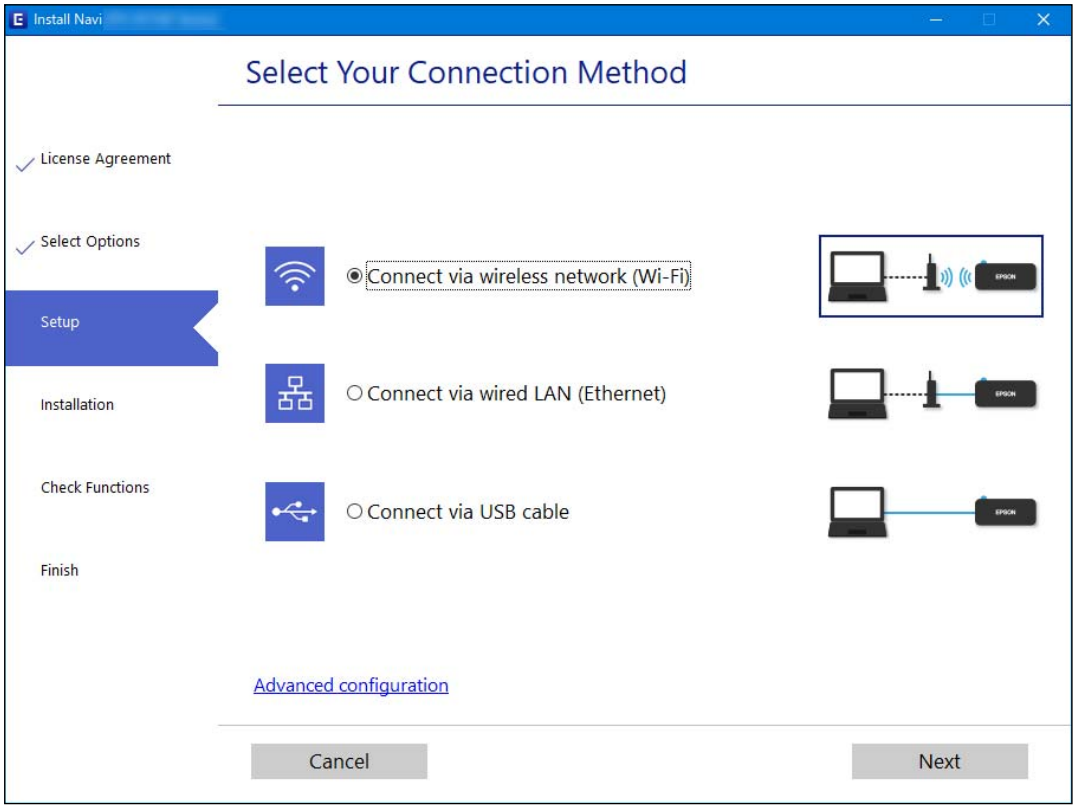

Note:
The displayed connection method differs depending on the model.

Follow the on-screen instructions.

Making Wi-Fi Settings from the Control Panel

You can make network settings from the printer's control panel in several ways. Choose the connection method that matches the environment and conditions that you are using.

If you know the information for the wireless router such as SSID and password, you can make settings manually.

If the wireless router supports WPS, you can make settings by using push button setup.

After connecting the printer to the network, connect to the printer from the device that you want to use (computer, smart device, tablet, and so on.)

Related Information

➡ "Making Wi-Fi Settings by Entering the SSID and Password" on page 237
➡ "Making Wi-Fi Settings by Push Button Setup (WPS)" on page 238
➡ "Making Wi-Fi Settings by PIN Code Setup (WPS)" on page 239

Making Wi-Fi Settings by Entering the SSID and Password

You can set up a Wi-Fi network by entering the information necessary to connect to a wireless router from the printer's control panel. To set up using this method, you need the SSID and password for a wireless router.

Note:
If you are using a wireless router with its default settings, the SSID and password are on the label. If you do not know the SSID and password, see the documentation provided with the wireless router.

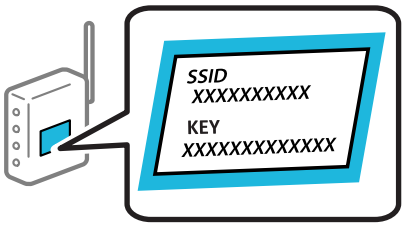

1. Tap on the home screen.

2. Tap **Wi-Fi (Recommended)**.

   If the printer has already been connected by Ethernet, tap **Router**.

3. Tap **Start Setup**.

   If the network connection is already set up, the connection details are displayed. Tap **Change Settings** to change the settings.

   If the printer has already been connected by Ethernet, tap **Change to Wi-Fi connection.**, and then tap **Yes** after confirming the message.

4. Tap **Wi-Fi Setup Wizard**.

5. Select the SSID for the wireless router.

   Note:
   - ❑ *If the SSID you want to connect to is not displayed on the printer's control panel, tap **Search Again** to update the list. If it is still not displayed, tap **Enter Manually**, and then enter the SSID directly.*
   - ❑ *If you do not know the network name (SSID) check if the information is written on the label of the wireless router. If you are using the wireless router with its default settings, use the SSID on the label. If you cannot find any information, see the documentation provided with the wireless router.*

6. Tap the **Enter Password** field, and then enter the password.

   Note:
   - ❏ *The password is case-sensitive.*
   - ❏ *If you do not know the password, check if the information is written on the label of the wireless router. On the label, the password may be written "Network Key", "Wireless Password", and so on. If you are using the wireless router with its default settings, use the password written on the label.*

7. When you have setup finished, tap **Start Setup**.

8. Tap **Close**.

   The screen automatically closes after a specific length of time if you do not tap **Close**.

   Note:
   *If you fail to connect, load A4 size plain paper, and then tap **Print Check Report** to print a connection report.*

9. Tap **Close** on the network connection settings screen.

Related Information

➡ "Entering Characters" on page 28
➡ "Checking the Network Connection Status" on page 244

Making Wi-Fi Settings by Push Button Setup (WPS)

You can automatically set up a Wi-Fi network by pressing a button on the wireless router. If the following conditions are met, you can set up by using this method.

- ❏ The wireless router is compatible with WPS (Wi-Fi Protected Setup).
- ❏ The current Wi-Fi connection was established by pressing a button on the wireless router.

1. Tap on the home screen.

2. Tap **Wi-Fi (Recommended)**.

   If the printer has been already connected by Ethernet, tap**Router**.

3. Tap **Start Setup**.

   If the network connection is already set up, the connection details are displayed. Tap **Change Settings** to change the settings.

   If the printer has been already connected by Ethernet, tap **Change to Wi-Fi connection.**, and then tap **Yes** after confirming the message.

4. Tap **Push Button Setup (WPS)**.

5. Hold down the [WPS] button on the wireless router until the security light flashes.

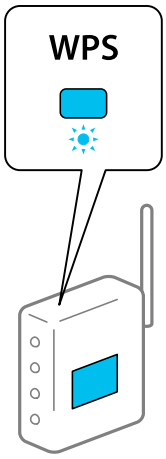

If you do not know where the [WPS] button is, or there are no buttons on the wireless router, see the documentation provided with your wireless router for details.

6. Tap **Start Setup**.

7. Tap **Close**.

   The screen automatically closes after a specific length of time if you do not tap **Close**.

   Note:
   If connection fails, restart the wireless router, move it closer to the printer, and try again. If it still does not work, print a network connection report and check the solution.

8. Tap **Close** on the network connection settings screen.

Related Information

➡ "Checking the Network Connection Status" on page 244

Making Wi-Fi Settings by PIN Code Setup (WPS)

You can automatically connect to an wireless router by using a PIN code. You can use this method to set up if an wireless router is capable of WPS (Wi-Fi Protected Setup). Use a computer to enter a PIN code into the wireless router.

1. Tap on the home screen.

2. Tap **Wi-Fi (Recommended)**.

   If the printer has been already connected by Ethernet, tap **Router**.

3. Tap **Start Setup**.

   If the network connection is already set up, the connection details are displayed. Tap **Change Settings** to change the settings.

   If the printer has been already connected by Ethernet, tap **Change to Wi-Fi connection.**, and then tap **Yes** after confirming the message.

4. Tap **Others** > **PIN Code Setup (WPS)**.

5. Use your computer to enter the PIN code (an eight digit number) displayed on the printer's control panel into the wireless router within two minutes.

   Note:
   See the documentation provided with your wireless router for details on entering a PIN code.

6. Tap **Start Setup** on the printer's control panel.

7. Tap **Close**.

   The screen automatically closes after a specific length of time if you do not tap **Close**.

   Note:
   If connection fails, restart the wireless router, move it closer to the printer, and try again. If it still does not work, print a connection report and check the solution.

8. Tap **Close** on the network connection settings screen.

Related Information

➡ "Checking the Network Connection Status" on page 244

Connecting a Smart Device and Printer Directly (Wi-Fi Direct)

Wi-Fi Direct (Simple AP) allows you to connect a smart device directly to the printer without a wireless router and print from the smart device.

About Wi-Fi Direct

Use this connection method when you are not using Wi-Fi at home or at the office, or when you want to connect the printer and the computer or smart device directly. In this mode, the printer acts as a wireless router and you can connect the devices to the printer without having to use a standard wireless router. However, devices directly connected to the printer cannot communicate with each other through the printer.

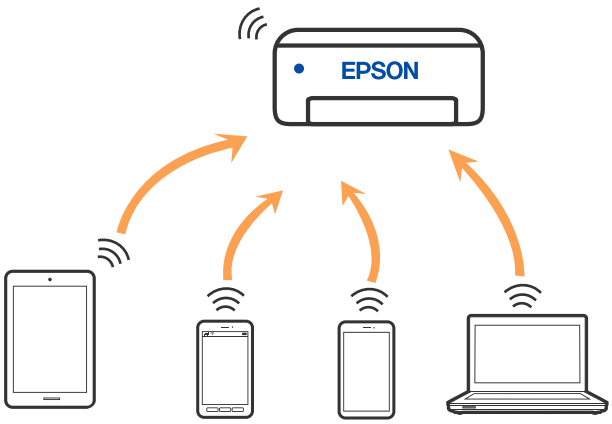

The printer can be connected by Wi-Fi or Ethernet, and Wi-Fi Direct (Simple AP) connection simultaneously. However, if you start a network connection in Wi-Fi Direct (Simple AP) connection when the printer is connected by Wi-Fi, the Wi-Fi is temporarily disconnected.

Connecting to Devices using Wi-Fi Direct

This method allows you to connect the printer directly to devices without a wireless router.

Note:
For iOS or Android users, it is convenient to set up from Epson Smart Panel.

You only need to make these settings for the printer and the device that you want to connect to once. Unless you disable Wi-Fi Direct or restore the network settings to their defaults, you do not need to make these settings again.

1. Tap on the home screen.
2. Tap **Wi-Fi Direct**.
3. Tap **Start Setup**.
4. Select **Other Methods**.
5. Select **Other OS Devices**.

6. On the device's Wi-Fi screen, select the SSID shown on the printer's control panel, and then enter the password.

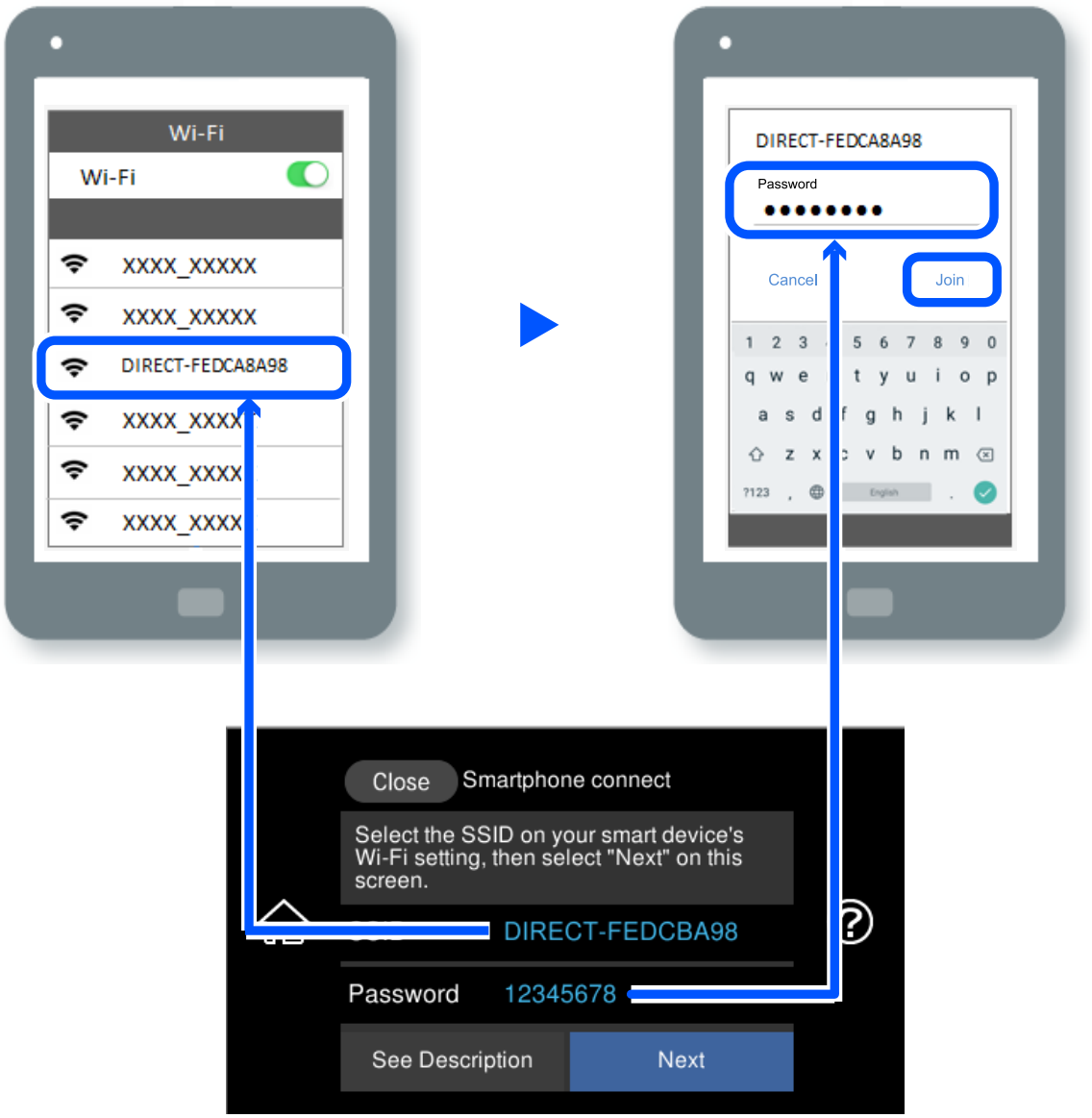

7. On the printing app screen for the device, select the printer that you want to connect to.

8. On the printer's control panel, select **Complete**.

For devices that have been connected to the printer before, select the network name (SSID) on the device's Wi-Fi screen to connect them again.

Note:
If you are using an iOS device, you can also connect by scanning the QR code with the standard iOS camera. See the link below https://epson.sn.

Disconnecting Wi-Fi Direct (Simple AP) Connection

Note:
When Wi-Fi Direct (Simple AP) connection disabled, all computers and smart devices connected to the printer in Wi-Fi Direct (Simple AP) connection are disconnected. If you want to disconnect a specific device, disconnect from the device instead of the printer.

1. Tap on the home screen.
2. Select **Wi-Fi Direct**.

   The Wi-Fi Direct information is displayed.
3. Tap **Start Setup**.
4. Tap .
5. Select **Disable Wi-Fi Direct**.
6. Tap the **Disable the settings**.
7. When a completion message is displayed, close the screen.

   The screen automatically closes after a specific length of time.
8. Close the **Network Connection Settings** screen.

Changing the Wi-Fi Direct (Simple AP) Settings Such as the SSID

When Wi-Fi Direct (simple AP) connection is enabled, you can change the settings from > **Wi-Fi Direct** > **Start Setup** > , and then the following menu items are displayed.

Change Network Name

Change the Wi-Fi Direct (simple AP) network name (SSID) used for connecting to the printer to your arbitrary name. You can set the network name (SSID) in ASCII characters that is displayed on the software keyboard on the control panel. You can enter up to 22 characters.

When changing the network name (SSID), all connected devices are disconnected. Use the new network name (SSID) if you want to re-connect the device.

Change Password

Change the Wi-Fi Direct (simple AP) password for connecting to the printer to your arbitrary value. You can set the password in ASCII characters that is displayed on the software keyboard on the control panel. You can enter 8 to 22 characters.

When changing the password, all connected devices are disconnected. Use the new password if you want to re-connect the device.

Change Frequency Range

Change the frequency range of Wi-Fi Direct used for connecting to the printer. You can select 2.4 GHz or 5 GHz.

When changing the frequency range, all connected devices are disconnected. Re-connect the device.

Note that you cannot re-connect from devices that do not support 5 GHz frequency range when changing to 5 GHz.

Disable Wi-Fi Direct

Disable Wi-Fi Direct (simple AP) settings of the printer. When disabling it, all devices connected to the printer in Wi-Fi Direct (Simple AP) connection are disconnected.

Restore Default Settings

Restore all Wi-Fi Direct (simple AP) settings to their defaults.

The Wi-Fi Direct (simple AP) connection information of the smart device saved to the printer is deleted.

Checking the Network Connection Status

You can check the network connection status in the following way.

Related Information

➡ "Checking the Network Connection Status from the Control Panel" on page 244
➡ "Printing a Network Connection Report" on page 245

Checking the Network Connection Status from the Control Panel

You can check the network connection status using the network icon or the network information on the printer's control panel.

Checking the Network Connection Status using the Network Icon

You can check the network connection status and strength of the radio wave using the network icon on the printer's home screen.

Related Information

➡ "Guide to the Network Icon" on page 26

Displaying Detailed Network Information on the Control Panel

When your printer is connected to the network, you can also view other network-related information by selecting the network menus you want to check.

1. Tap **Settings** on the home screen.
2. Select **Network Settings** > **Network Status**.
3. To check the information, select the menus that you want to check.
   - ❏ Wired LAN/Wi-Fi Status

     Displays the network information (device name, connection, signal strength, obtain IP address, and so on) for Ethernet or Wi-Fi connections.
   - ❏ Wi-Fi Direct Status

     Displays whether Wi-Fi Direct (Simple AP) is enabled or disabled for Wi-Fi Direct (Simple AP) connections.
   - ❏ Print Status Sheet

     Prints a network status sheet. The information for Ethernet, Wi-Fi, Wi-Fi Direct (Simple AP), and so on is printed on two or more pages.

Printing a Network Connection Report

You can print a network connection report to check the status between the printer and the wireless router.

1. Load papers.
2. Tap **Settings** on the home screen.
3. Tap **Network Settings** > **Connection Check**.

   The connection check starts.
4. Tap **Print Check Report**.
5. Follow the instructions on the printer's screen to print the network connection report.

   If an error has occurred, check the network connection report, and then follow the printed solutions.
6. Tap **Close**.

Related Information

➡ "Messages and Solutions on the Network Connection Report" on page 246

Messages and Solutions on the Network Connection Report

Check the messages and error codes on the Network Connection Report, and then follow the solutions.

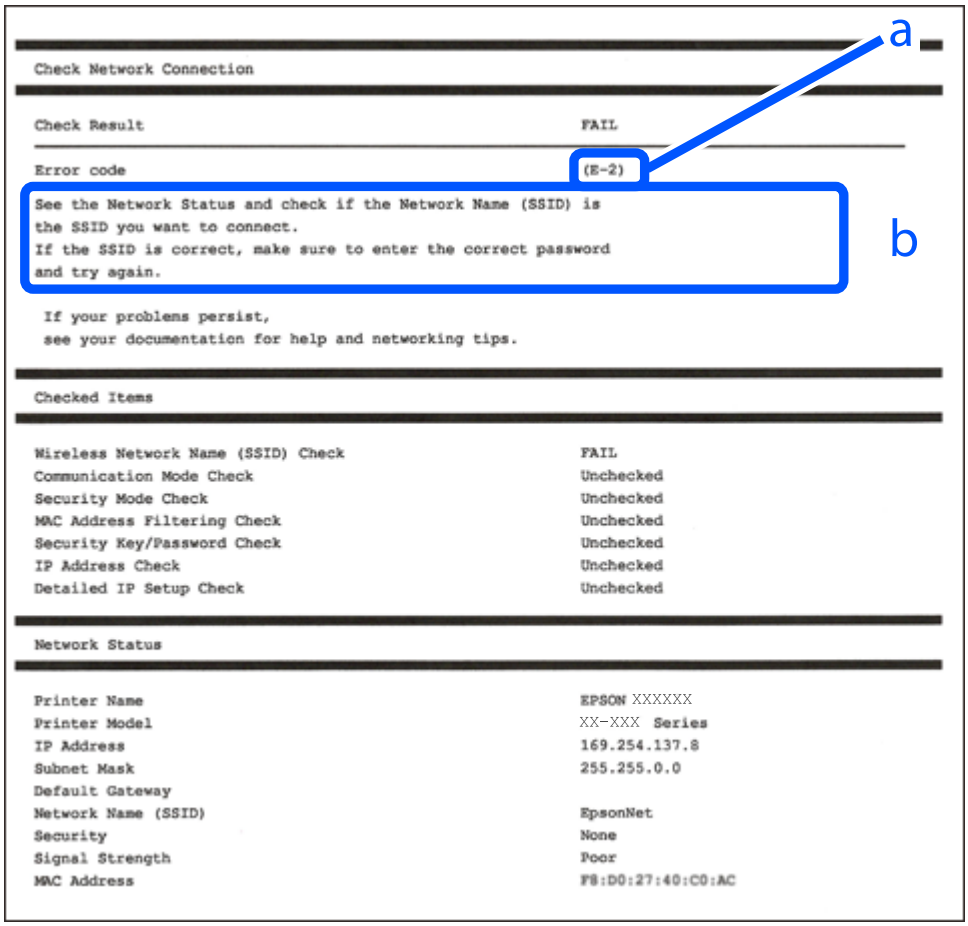

a. Error code

b. Network Environment Message

Related Information

- ➡ "E-1" on page 247
- ➡ "E-2, E-3, E-7" on page 247
- ➡ "E-5" on page 248
- ➡ "E-6" on page 248
- ➡ "E-8" on page 248
- ➡ "E-9" on page 249
- ➡ "E-10" on page 249
- ➡ "E-11" on page 249
- ➡ "E-12" on page 250
- ➡ "E-13" on page 250
- ➡ "Message on the Network Environment" on page 251

E-1

Solutions:

- ❏ Make sure the Ethernet cable is securely connected to your printer and to your hub or other network device.
- ❏ Make sure your hub or other network device is turned on.
- ❏ If you want to set up a Wi-Fi connection, reselect the Wi-Fi settings because they are currently disabled.

E-2, E-3, E-7

Solutions:

- ❏ Make sure your wireless router is turned on.
- ❏ Confirm that your computer or device is connected correctly to the wireless router.
- ❏ Turn off the wireless router. Wait for about 10 seconds, and then turn it on.
- ❏ Place the printer closer to your wireless router and remove any obstacles between them.
- ❏ If you have entered the SSID manually, check if it is correct. Check the SSID from the **Network Status** part on the network connection report.
- ❏ If an wireless router has multiple SSIDs, select the SSID that is displayed. When the SSID is using a non-compliant frequency, the printer does not display them.
- ❏ If you are using push button setup to establish a network connection, make sure your wireless router supports WPS. You cannot use push button setup if your wireless router does not support WPS.
- ❏ Make sure your SSID uses only ASCII characters (alphanumeric characters and symbols). The printer cannot display an SSID that contains non-ASCII characters.
- ❏ Make sure you know your SSID and password before connecting to the wireless router. If you are using a wireless router with its default settings, the SSID and password are located on a label on the wireless router. If you do not know your SSID and password, contact the person who set up the wireless router, or see the documentation provided with the wireless router.
- ❏ If you are connecting to an SSID generated from a tethering smart device, check for the SSID and password in the documentation provided with the smart device.
- ❏ If your Wi-Fi connection suddenly disconnects, check for the conditions below. If any of these conditions are applicable, reset your network settings by downloading and running the software from the following website.

  https://epson.sn > **Setup**

  - ❏ Another smart device was added to the network using push button setup.
  - ❏ The Wi-Fi network was set up using any method other than push button setup.

Related Information

➡ "Making Settings for Connecting to the Computer" on page 235
➡ "Making Wi-Fi Settings from the Control Panel" on page 236

E-5

Solutions:

Make sure the wireless router's security type is set to one of the following. If it is not, change the security type on the wireless router, and then reset the printer's network settings.

- ❏ WEP-64 bit (40 bit)
- ❏ WEP-128 bit (104 bit)
- ❏ WPA PSK (TKIP/AES)*
- ❏ WPA2 PSK (TKIP/AES)*
- ❏ WPA (TKIP/AES)
- ❏ WPA2 (TKIP/AES)
- ❏ WPA3-SAE (AES)

* WPA PSK is also known as WPA Personal. WPA2 PSK is also known as WPA2 Personal.

E-6

Solutions:

- ❏ Check if MAC address filtering is disabled. If it is enabled, register the printer's MAC address so that it is not filtered. See the documentation provided with the wireless router for details. You can check the printer's MAC address from the **Network Status** part on the network connection report.
- ❏ If your wireless router is using shared authentication with WEP security, make sure the authentication key and index are correct.
- ❏ If the number of connectable devices on the wireless router is less than the number of network devices that you want to connect, make settings on the wireless router to increase the number of connectable devices. See the documentation provided with the wireless router to make settings.

Related Information

➡ "Making Settings for Connecting to the Computer" on page 235

E-8

Solutions:

- ❏ Enable DHCP on the wireless router if the printer's Obtain IP Address setting is set to Auto.
- ❏ If the printer's Obtain IP Address setting is set to Manual, the IP address you manually set is invalid due to out of range (for example: 0.0.0.0). Set a valid IP address from the printer's control panel.

Related Information

➡ "Network Settings" on page 270

E-9

Solutions:

Check the following.

❏ Devices are turned on.

❏ You can access the Internet and other computers or network devices on the same network from the devices you want to connect to the printer.

If still does not connect your printer and network devices after confirming the above, turn off the wireless router. Wait for about 10 seconds, and then turn it on. Then reset your network settings by downloading and running the installer from the following website.

https://epson.sn > **Setup**

Related Information

➡ "Making Settings for Connecting to the Computer" on page 235

E-10

Solutions:

Check the following.

❏ Other devices on the network are turned on.

❏ Network addresses (IP address, subnet mask, and default gateway) are correct if you have set the printer's Obtain IP Address to Manual.

Reset the network address if they are incorrect. You can check the IP address, subnet mask, and default gateway from the **Network Status** part on the network connection report.

If DHCP is enabled, change the printer's Obtain IP Address setting to Auto. If you want to set the IP address manually, check the printer's IP address from the **Network Status** part on the network connection report, and then select Manual on the network settings screen. Set the subnet mask to [255.255.255.0].

If still does not connect your printer and network devices, turn off the wireless router. Wait for about 10 seconds, and then turn it on.

Related Information

➡ "Network Settings" on page 270

E-11

Solutions:

Check the following.

❏ The default gateway address is correct if you set the printer's TCP/IP Setup setting to Manual.

❏ The device that is set as the default gateway is turned on.

Set the correct default gateway address. You can check the default gateway address from the **Network Status** part on the network connection report.

Related Information

➡ "Network Settings" on page 270

E-12

Solutions:

Check the following.

❏ Other devices on the network are turned on.

❏ The network addresses (IP address, subnet mask, and default gateway) are correct if you are entering them manually.

❏ The network addresses for other devices (subnet mask and default gateway) are the same.

❏ The IP address does not conflict with other devices.

If still does not connect your printer and network devices after confirming the above, try the following.

❏ Turn off the wireless router. Wait for about 10 seconds, and then turn it on.

❏ Make network settings again using the installer. You can run it from the following website.

https://epson.sn > **Setup**

❏ You can register several passwords on a wireless router that uses WEP security type. If several passwords are registered, check if the first registered password is set on the printer.

Related Information

➡ "Network Settings" on page 270

➡ "Making Settings for Connecting to the Computer" on page 235

E-13

Solutions:

Check the following.

❏ Network devices such as a wireless router, hub, and router are turned on.

❏ The TCP/IP Setup for network devices has not been set up manually. (If the printer's TCP/IP Setup is set automatically while the TCP/IP Setup for other network devices is performed manually, the printer's network may differ from the network for other devices.)

If it still does not work after checking the above, try the following.

❏ Turn off the wireless router. Wait for about 10 seconds, and then turn it on.

❏ Make network settings on the computer that is on the same network as the printer using the installer. You can run it from the following website.

https://epson.sn > **Setup**

❏ You can register several passwords on a wireless router that uses the WEP security type. If several passwords are registered, check if the first registered password is set on the printer.

Related Information

➡ "Network Settings" on page 270
➡ "Making Settings for Connecting to the Computer" on page 235

Message on the Network Environment

Message	Solution
The Wi-Fi environment needs to be improved. Turn the wireless router off and then turn it on. If the connection does not improve, see the documentation for the wireless router.	After moving the printer closer to the wireless router and removing any obstacles between them, turn off the wireless router. Wait for about 10 seconds, and then turn it on. If it still does not connect, see the documentation supplied with the wireless router.
*No more devices can be connected. Disconnect one of the connected devices if you want to add another one.	Computer and smart devices that can be connected simultaneously are connected in full in the Wi-Fi Direct (Simple AP) connection. To add another computer or smart device, disconnect one of the connected devices or connect it to the other network first. You can confirm the number of wireless devices which can be connected simultaneously and the number of connected devices by checking the network status sheet or the printer's control panel.
The same SSID as Wi-Fi Direct exists in the environment. Change the Wi-Fi Direct SSID if you cannot connect a smart device to the printer.	On the printer's control panel, go to Wi-Fi Direct Setup screen and select the menu to change the setting. You can change the network name following after DIRECT-XX-. Enter within 22 characters.

Printing a Network Status Sheet

You can check the detailed network information by printing it.

1. Load papers.
2. Tap **Settings** on the home screen.
3. Tap **Network Settings** > **Network Status**.
4. Tap **Print Status Sheet**.
5. Check the message, and then print the network status sheet.
6. Tap **Close**.

Product Information

Paper Information. 253

Consumable Products Information. 258

Software Information. 259

Settings Menu List. 267

Product Specifications. 274

Regulatory Information. 282

Paper Information

Available Paper and Capacities

Genuine Epson Paper

Epson recommends using genuine Epson paper to ensure high-quality printouts.

Note:

- *The availability of paper varies by location. For the latest information on paper available in your area, contact Epson support.*
- *See the following for information on available paper types for borderless and 2-sided printing.*

"Paper for Borderless Printing" on page 256

"Paper for 2-Sided Printing" on page 257

Paper suitable for printing documents

Media Name	Size	Loading Capacity (Sheets)			
		Paper Cassette 1	Paper Cassette 2	Rear paper Feeder	Rear Paper Feed Slot*
Epson Bright White Ink Jet Paper	A4	-	100	40	1

* For the rear paper feed slot, you cannot print within the area 20 mm from the bottom edge.

Paper suitable for printing documents and photos

Media Name	Size	Loading Capacity (Sheets)			
		Paper Cassette 1	Paper Cassette 2	Rear paper Feeder	Rear Paper Feed Slot*
Epson Photo Quality Ink Jet Paper	A4	-	80	40	1
Epson Double-sided Photo Quality Ink Jet Paper	A4	-	50	1	1
Epson Matte Paper-Heavyweight	A4	-	20	20	1
Epson Double-Sided Matte Paper	A4	-	1	20	1

* For the rear paper feed slot, you cannot print within the area 20 mm from the bottom edge.

Paper suitable for printing photos

Media Name	Size	Loading Capacity (Sheets)			
		Paper Cassette 1	Paper Cassette 2	Rear paper Feeder	Rear Paper Feed Slot*
Epson Ultra Glossy Photo Paper	A4	-	20	20	1
	13x18 cm (5x7in.), 10x15 cm(4x6 in.)	20	20	20	-
Epson Premium Glossy Photo Paper	A4	-	20	20	1
	13x18 cm (5x7in.), 10x15 cm (4x6 in.)	20	20	20	-
Epson Premium Semigloss Photo Paper	A4	-	20	20	1
	10x15 cm(4x6 in.)	20	20	20	-
Epson Photo Paper Glossy	A4	-	20	20	1
	13x18 cm (5x7in.), 10x15 cm(4x6 in.)	20	20	20	-
Epson Value Glossy Photo Paper	A4	-	20	20	1
	10x15 cm(4x6 in.)	20	20	20	-

* For the rear paper feed slot, you cannot print within the area 20 mm from the bottom edge.

Various other paper types

Media Name	Size	Loading Capacity (Sheets)			
		Paper Cassette 1	Paper Cassette 2	Rear paper Feeder	Rear Paper Feed Slot*1
Epson Photo Stickers*2	A6	1	1	1	-
Epson Iron-On Cool Peel Transfer Paper*2	A4	-	1	1	1

*1 For the rear paper feed slot, you cannot print within the area 20 mm from the bottom edge.

*2 Only printing from computer is available.

Commercially Available Paper

Note:
See the following for information on available paper types for borderless and 2-sided printing.

"Paper for Borderless Printing" on page 256

"Paper for 2-Sided Printing" on page 257

Plain papers

Media Name	Size	Loading Capacity (Sheets)			
		Paper Cassette 1	Paper Cassette 2	Rear Paper Feeder	Rear Paper Feed Slot*1
Copy paper Plain paper*2 Letterhead*3	Legal, 8.5×13 in., Indian Legal	–	–	50	1
	A4, B5, Letter, 16K (195×270 mm)	–	100	50	1
	A5	–	100	50	–
	A6, B6	20	100	50	–
	User Defined*4(mm) 89×127 to 215.9×297	–	1	–	–
	User Defined*4(mm) 54×86 to 215.9×2000	–	–	1	–
	User Defined*4(mm) 182×254 to 215.9×2000	–	–	–	1

*1 For the rear paper feed slot, you cannot print within the area 20 mm from the bottom edge.

*2 Use the rear paper feeder to load pre-punched paper.

*3 Paper on which information such as the sender's name or corporation name are pre-printed in the header. There must be a margin of 5 mm or more at the top of the paper. 2-sided printing and borderless printing are not available for letterhead paper.

*4 Only printing from computer is available.

Thin papers, Thick papers

Media Name	Size	Loading Capacity (Sheets)			
		Paper Cassette 1	Paper Cassette 2	Rear Paper Feeder	Rear Paper Feed Slot*1
Thin paper	Legal, Letter, 8.5x13 in., A4, B5, A5, A6, B6, 16K (195×270 mm), Indian Legal	-	-	1	-
	User Defined*2(mm) 54×86 to 215.9×2000	-	-	1	-
Thick paper (0.61mm to 1.30mm)	Legal, Letter, 8.5x13 in., A4, B5, 16K (195×270 mm), Indian Legal	-	-	-	1
	User Defined*2(mm) 182×254 to 215.9×2000	-	-	-	1

*1 For the rear paper feed slot, you cannot print within the area 20 mm from the bottom edge.

*2 Only printing from computer is available.

Envelope

Media Name	Size	Loading Capacity (Envelopes)			
		Paper Cassette 1	Paper Cassette 2	Rear Paper Feeder	Rear Paper Feed Slot
Envelope	Envelope #10, Envelope DL, Envelope C6	–	10	10	–

Paper for Borderless Printing

Genuine Epson Paper

- ❏ Epson Bright White Ink Jet Paper
- ❏ Epson Photo Quality Ink Jet Paper
- ❏ Epson Double-sided Photo Quality Ink Jet Paper
- ❏ Epson Matte Paper-Heavyweight
- ❏ Epson Ultra Glossy Photo Paper

- ❏ Epson Premium Glossy Photo Paper
- ❏ Epson Premium Semigloss Photo Paper
- ❏ Epson Photo Paper Glossy
- ❏ Epson Value Glossy Photo Paper

Related Information

➡ "Available Paper and Capacities" on page 253

Commercially Available Paper

- ❏ Plain paper, Copy paper, Letterhead*
- ❏ Thin paper*

* For borderless printing, you can use Legal, Letter, A4, and User Defined paper sizes.

Related Information

➡ "Available Paper and Capacities" on page 253

Paper for 2-Sided Printing

Genuine Epson Paper

- ❏ Epson Bright White Ink Jet Paper
- ❏ Epson Double-sided Photo Quality Ink Jet Paper
- ❏ Epson Double-Sided Matte Paper

Related Information

➡ "Available Paper and Capacities" on page 253

Commercially Available Paper

- ❏ Copy paper, Plain paper*1
- ❏ Thin paper, Thick paper*2

*1 For automatic 2-sided printing, you can use A4, Letter, B5, 16K, and User Defined (182 x 257 to 215.9 x 297 mm) paper sizes.

*2 Manual 2-sided printing only.

Related Information

➡ "Available Paper and Capacities" on page 253

Unavailable Paper Types

Do not use the following papers. Using these types of paper causes paper jams and smears on the printout.

- ❏ Papers that are wavy
- ❏ Papers that are torn or cut
- ❏ Papers that are folded
- ❏ Papers that are damp
- ❏ Papers that are too thick or too thin
- ❏ Papers that have stickers

Do not use the following envelopes. Using these types of envelope causes paper jams and smears on the printout.

- ❏ Envelopes that are curled or folded
- ❏ Envelopes with adhesive surfaces on the flaps or window envelopes
- ❏ Envelopes that are too thin
  They may curl during printing.

Consumable Products Information

Ink Bottle Codes

Epson recommends the use of genuine Epson ink bottles.

The following are the codes for genuine Epson ink bottles.

Important:

- ❏ *Epson warranty does not cover damage caused by inks other than those specified, including any genuine Epson ink not designed for this printer or any third party ink.*
- ❏ *Other products not manufactured by Epson may cause damage that is not covered by Epson's warranties, and under certain circumstances, may cause erratic printer behavior.*

Note:

- ❏ *Ink bottle codes may vary by location. For the correct codes in your area, contact Epson support.*
- ❏ *Although the ink bottles may contain recycled materials, this does not affect printer function or performance.*
- ❏ *Specifications and appearance of the ink bottle are subject to change without prior notice for improvement.*

For Europe

Product	BK: Black	PB: Photo Black	C: Cyan	M: Magenta	Y: Yellow	GY: Grey
ET-8500 Series	114	114	114	114	114	114
L8160 Series	115	115	115	115	115	115

Note:
Visit the following website for information on Epson's ink bottle yields.

https://www.epson.eu/pageyield

For Australia and New Zealand

BK: Black	PB: Photo Black	C: Cyan	M: Magenta	Y: Yellow	GY: Grey
552	552	552	552	552	552

Maintenance Box Code

The maintenance box can be purchased and replaced by the user. Epson recommends the use of a genuine Epson maintenance box.

The following is the code for the genuine Epson maintenance box.

C9345

Important:
Once a maintenance box has been installed in a printer it cannot be used with other printers.

Software Information

This section introduces the network services and software products available for your printer from the Epson website.

Software for Printing

Application for Printing from a Computer (Windows Printer Driver)

The printer driver controls the printer according to the commands from an application. Making settings on the printer driver provides the best printing results. You can also check the status of the printer or keep it in top operating condition using the printer driver utility.

Note:
You can change the language of the printer driver. Select the language you want to use from the ***Language*** *setting on the* ***Maintenance*** *tab.*

Accessing the printer driver from applications

To make settings that apply only to the application you are using, access from that application.

Select **Print** or **Print Setup** from the **File** menu. Select your printer, and then click **Preferences** or **Properties**.

Note:
Operations differ depending on the application. See the application's help for details.

Accessing the printer driver from the control panel

To make settings that apply to all of the applications, access from the control panel.

❏ Windows 10/Windows Server 2019/Windows Server 2016

Click on the start button, and then select **Windows System** > **Control Panel** > **View devices and printers** in **Hardware and Sound**. Right-click on your printer, or press and hold it and then select **Printing preferences**

❏ Windows 8.1/Windows 8/Windows Server 2012 R2/Windows Server 2012

Select **Desktop** > **Settings** > **Control Panel** > **View devices and printers** in **Hardware and Sound**. Right-click on your printer, or press and hold it and then select **Printing preferences**

❏ Windows 7/Windows Server 2008 R2

Click the start button, and select **Control Panel** > **View devices and printers** in **Hardware and Sound**. Right-click on your printer and select **Printing preferences**.

❏ Windows Vista/Windows Server 2008

Click the start button, and select **Control Panel** > **Printers** in **Hardware and Sound**. Right-click on your printer and select **Printing preferences**.

❏ Windows XP/Windows Server 2003 R2/Windows Server 2003

Click the start button, and select **Control Panel** > **Printers and Other Hardware** > **Printers and Faxes**. Right-click on your printer and select **Printing preferences**.

Accessing the printer driver from the printer icon on the task bar

The printer icon on the desktop task bar is a shortcut icon allowing you to quickly access the printer driver.

If you click the printer icon and select **Printer Settings**, you can access the same printer settings window as the one displayed from the control panel. If you double-click this icon, you can check the status of the printer.

Note:
*If the printer icon is not displayed on the task bar, access the printer driver window, click **Monitoring Preferences** on the **Maintenance** tab, and then select **Register the shortcut icon to the taskbar**.*

Starting the utility

Access the printer driver window. Click the **Maintenance** tab.

Related Information

➡ "Printing from a Computer - Windows" on page 61

Making Operation Settings for the Windows Printer Driver

You can make settings such as enabling **EPSON Status Monitor 3**.

1. Access the printer driver window.
2. Click **Extended Settings** on the **Maintenance** tab.
3. Make the appropriate settings, and then click **OK**.

   See the online help for explanations of the setting items.

Related Information

➡ "Application for Printing from a Computer (Windows Printer Driver)" on page 259

Application for Printing from a Computer (Mac OS Printer Driver)

The printer driver controls the printer according to the commands from an application. Making settings on the printer driver provides the best printing results. You can also check the status of the printer or keep it in top operating condition using the printer driver utility.

Accessing the printer driver from applications

Click **Page Setup** or **Print** on the **File** menu of your application. If necessary, click **Show Details** (or ▼) to expand the print window.

Note:
*Depending on the application being used, **Page Setup** may not be displayed in the **File** menu, and the operations for displaying the print screen may differ.See the application's help for details.*

Starting the utility

Select **System Preferences** from the Apple menu > **Printers & Scanners** (or **Print & Scan**, **Print & Fax**), and then select the printer. Click **Options & Supplies** > **Utility** > **Open Printer Utility**.

Related Information

➡ "Printing from a Computer - Mac OS" on page 78

Guide to Mac OS Printer Driver

Epson Printer Utility

You can run a maintenance feature such as nozzle check and print head cleaning, and by starting **EPSON Status Monitor**, you can check printer status and error information.

Accessing the Operation Settings Window of the Mac OS Printer Driver

Select **System Preferences** from the Apple menu > **Printers & Scanners** (or **Print & Scan**, **Print & Fax**), and then select the printer. Click **Options & Supplies** > **Options** (or **Driver**).

Application for Quick and Fun Printing from a Computer (Epson Photo+)

Epson Photo+ is an application that allows you to easily print images with a variety of layouts. You can use a variety of templates and perform image correction and adjust the position while viewing a preview of your document. You can also brighten up your images by adding text and stamps wherever you like. When printing on genuine Epson photo paper, the ink performance is maximized creating a beautiful finish with excellent coloring.

It also comes with the following features. See the application's help for details. You can download the latest applications from the Epson website.

https://www.epson.com

- ❏ Printing disc labels (supported models only)
- ❏ Printing created QR codes
- ❏ Printing photos showing the shooting date and time

Note:

- ❏ *Windows Server operating systems are not supported.*
- ❏ *To use this application the printer driver for this printer must be installed.*

Starting on Windows

- ❏ Windows 10

  Click the start button, and then select **Epson Software** > **Epson Photo+**.

- ❏ Windows 8.1/Windows 8

  Enter the application name in the search charm, and then select the displayed icon.

- ❏ Windows 7/Windows Vista/Windows XP

  Click the start button, and select **All Programs** or **Programs** > **Epson Software** > **Epson Photo+**.

Starting on Mac OS

Select **Go** > **Applications** > **Epson Software** > **Epson Photo+**.

Related Information

➡ "Installing the Applications Separately" on page 146

Application for Easily Operating the Printer from a Smart device (Epson Smart Panel)

Epson Smart Panel is an application that allows you to perform printer operations easily including printing, copying, or scanning from a smart device such as a smartphone or tablet. You can connect the printer and smart device over a wireless network, check the ink levels and printer status, and check for solutions if an error occurs. You can also copy easily by registering a copy favorite.

Search for and install Epson Smart Panel from App Store or Google Play.

Guide to the Epson Smart Panel Screen

Start Epson Smart Panel from your smart device and select the item you want to use from the home screen.

The following screens are subject to change without notice. The contents may vary depending on the product.

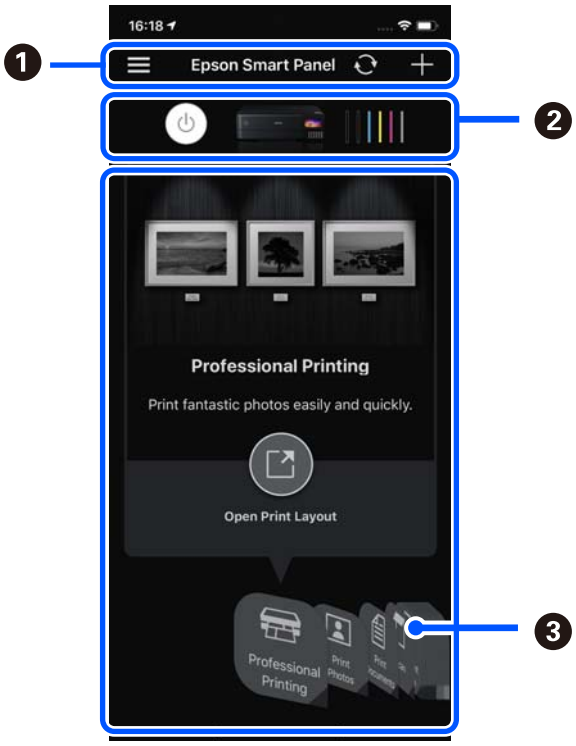

❶	☰ displays application settings and information on how to use the application. + starts registering a printer.
❷	Displays the printer name and ink levels.
❸	When you select the menu you want to use, the screen of the menu is displayed.

Application for Enjoying a Variety of Photo Printing (Epson Creative Print)

Epson Creative Print is an application that allows you to enjoy various types of photo printing such as collage printing from a smart device such as a smart phone or tablet.

You can install it from the Epson iPrint home screen.

Application for Printing Easily from an Android Application (Epson Print Enabler)

Epson Print Enabler is an application that allows you to wirelessly print your documents, emails, photos, and web pages right from your Android phone or tablet (Android v4.4 or later). With a few taps, your Android device will discover an Epson printer that is connected to the same wireless network.

Search for and install Epson Print Enabler from Google Play.

Software for Scanning

Application for Scanning from a Computer (Epson ScanSmart)

This application allows you to scan documents and photos easily, and then save the scanned images in simple steps.

See the Epson ScanSmart help for details on using the features.

Starting on Windows

❏ Windows 10

Click the start button, and then select **Epson Software** > **Epson ScanSmart**.

❏ Windows 8.1/Windows 8

Enter the application name in the search charm, and then select the displayed icon.

❏ Windows 7

Click the start button, and then select **All Programs** > **Epson Software** > **Epson ScanSmart**.

Starting on Mac OS

Select **Go** > **Applications** > **Epson Software** > **Epson ScanSmart**.

Software for Making Settings

Application for Configuring Printer Operations (Web Config)

Web Config is an application that runs in a web browser, such as Microsoft Edge and Safari, on a computer or smart device. You can confirm the printer status or change the network service and printer settings. To use the Web Config, connect the printer and the computer or device to the same network.

The following browsers are supported. Use the latest version.

Microsoft Edge, Internet Explorer, Firefox, Chrome, Safari

Note:
You may be asked to enter the administrator password while operating Web Config. See the related information below for more details.

Related Information

➡ "Default Value of the Administrator Password" on page 15

Running Web Config on a Web Browser

1. Check the printer's IP address.

   Select the network icon on the printer's home screen, and then select the active connection method to confirm the printer's IP address.

   Note:
   You can also check the IP address by printing the network connection report.

2. Launch a Web browser from a computer or smart device, and then enter the printer's IP address.

   Format:

   IPv4: http://the printer's IP address/

   IPv6: http://[the printer's IP address]/

   Examples:

   IPv4: http://192.168.100.201/

   IPv6: http://[2001:db8::1000:1]/

   Note:
   Using the smart device, you can also run Web Config from the product information screen of the Epson Smart Panel.

   Since the printer uses a self-signed certificate when accessing HTTPS, a warning is displayed on the browser when you start Web Config; this does not indicate a problem and can be safely ignored.

Related Information

➡ "Application for Easily Operating the Printer from a Smart device (Epson Smart Panel)" on page 262
➡ "Printing a Network Connection Report" on page 245

Running Web Config on Windows

When connecting a computer to the printer using WSD, follow the steps below to run Web Config.

1. Open the printer list on the computer.

   ❑ Windows 10

   Click on the start button, and then select **Windows System** > **Control Panel** > **View devices and printers** in **Hardware and Sound**.

   ❑ Windows 8.1/Windows 8

   Select **Desktop** > **Settings** > **Control Panel** > **View devices and printers** in **Hardware and Sound** (or **Hardware**).

❏ Windows 7

Click the start button, and select **Control Panel** > **View devices and printers** in **Hardware and Sound**.

❏ Windows Vista

Click the start button, and select **Control Panel** > **Printers** in **Hardware and Sound**.

2. Right-click on your printer and select **Properties**.

3. Select the **Web Service** tab and click the URL.

   Since the printer uses a self-signed certificate when accessing HTTPS, a warning is displayed on the browser when you start Web Config; this does not indicate a problem and can be safely ignored.

Running Web Config on Mac OS

1. Select **System Preferences** from the Apple menu > **Printers & Scanners** (or **Print & Scan**, **Print & Fax**), and then select the printer.

2. Click **Options & Supplies**> **Show Printer Webpage**.

   Since the printer uses a self-signed certificate when accessing HTTPS, a warning is displayed on the browser when you start Web Config; this does not indicate a problem and can be safely ignored.

Application for Setting up the Device on a Network (EpsonNet Config)

EpsonNet Config is an application that allows you to set the network interface addresses and protocols. See the operations guide for EpsonNet Config or the application's help for more details.

Starting on Windows

❏ Windows 10/Windows Server 2019/Windows Server 2016

Click the start button, and then select **EpsonNet** > **EpsonNet Config**.

❏ Windows 8.1/Windows 8/Windows Server 2012 R2/Windows Server 2012

Enter the application name in the search charm, and then select the displayed icon.

❏ Windows 7/Windows Vista/Windows XP/Windows Server 2008 R2/Windows Server 2008/Windows Server 2003 R2/Windows Server 2003

Click the start button, and select **All Programs** or **Programs** > **EpsonNet** > **EpsonNet Config SE** > **EpsonNet Config**.

Starting on Mac OS

Go > **Applications** > **Epson Software** > **EpsonNet** > **EpsonNet Config SE** > **EpsonNet Config**.

Software for Updating

Application for Updating Software and Firmware (EPSON Software Updater)

EPSON Software Updater is an application that installs new software, and updates firmware and manuals over the Internet. If you want to check for update information regularly, you can set the interval for checking for updates in EPSON Software Updater's Auto Update Settings.

Note:
Windows Server operating systems are not supported.

Starting on Windows

❏ Windows 10

Click the start button, and then select **Epson Software** > **EPSON Software Updater**.

❏ Windows 8.1/Windows 8

Enter the application name in the search charm, and then select the displayed icon.

❏ Windows 7/Windows Vista/Windows XP

Click the start button, and then select **All Programs** (or **Programs**) > **Epson Software** > **EPSON Software Updater**.

Note:
You can also start EPSON Software Updater by clicking the printer icon on the task bar on the desktop, and then selecting ***Software Update****.*

Starting on Mac OS

Select **Go** > **Applications** > **Epson Software** > **EPSON Software Updater**.

Related Information

➡ "Installing the Applications Separately" on page 146

Settings Menu List

Select **Settings** on the home screen of the printer to make various settings.

Print Counter

Select the menus on the control panel as described below.

Settings > **Print Counter**

Displays the total number of prints, B&W prints, color prints, and the total number of pages fed through the printer including items such as the status sheet, from the time you purchased the printer.

Basic Settings

Select the menus on the control panel as described below.

Settings > **Basic Settings**

Sound:

Adjust the volume.

LCD Brightness:

Adjust the brightness of the LCD screen.

Auto Power On:

Select **On** to turn on the printer automatically when it receives a print or scan job over a USB-connection or a network connection. It increases power consumption slightly in standby status when compared to turning the printer off completely.

Use the **Power Off Timer** setting if you want the printer to automatically turn off when the print or scan job is finished and a set time period has passed with no operations performed. This is useful when printing from a remote location such as over the Internet.

Power Off Timer:

Your product may have this feature or the **Power Off Settings** feature depending on the location of purchase.

Select this setting to turn the printer off automatically when it is not used for a specified period of time. You can adjust the time before power management is applied. Any increase will affect the product's energy efficiency. Please consider the environment before making any change.

Power Off Settings:

Your product may have this feature or the **Power Off Timer** feature depending on the location of purchase.

- Power Off If Inactive

  Select this setting to turn the printer off automatically if it is not used for a specified period of time. Any increase will affect the product's energy efficiency. Please consider the environment before making any change.

- Power Off If Disconnected

  Select this setting to turn the printer off after a specified period of time when all ports including the USB port are disconnected. This feature may not be available depending on your region.

  See the following website for the specified period of time.

  https://www.epson.eu/energy-consumption

Sleep Timer:

Adjust the time period to enter a sleep mode (energy saving mode) when the printer has not performed any operations. The LCD screen turns black when the setting time passes.

Language:

Select the language used on the LCD screen.

Background Color:

Change the background color of the LCD screen.

Output Tray LED Brightness:

Adjust the brightness of the output tray LED during printing. Select Off to turn off the output tray LED during printing.

Clear All Settings:

Resets the **Basic Settings** to their defaults.

Related Information

➡ "Saving Power" on page 145

Printer Settings

Select the menus on the control panel as described below.

Settings > **Printer Settings**

Paper Source Setting:

Paper Setup:

Select the paper size and paper type you loaded in the paper source. You can make **Favorite Paper Settings** in paper size and paper type.

Paper Configuration:

Select **On** to display the paper settings screen automatically by referring to **Settings** > **Printer Settings** > **Paper Source Setting** > **Paper Setup** when paper is loaded in the paper source. If you disable this feature, you cannot print from an iPhone, iPad or iPod touch using AirPrint.

CD/DVD:

Adjusts the printing position of a CD/DVD by moving up, down, left, or right to fit.

CD Inner/Outer:

Adjusts the printing position of the inner and outer diameters of a CD/DVD. Up to 120 mm for the outer diameter, and a minimum of 18 mm for the inner diameter can be specified. Depending on the setting, the CD/DVD or CD/DVD tray may get dirty. Set the range to fit the printable area of your CD/DVD. The print area set here is the initial value when printing photos from a memory card onto a CD/DVD.

Stickers:

Adjusts the printing position of a photo sticker by moving up, down, left, or right to fit.

Thick Paper:

Select **On** to prevent ink from smearing on your printouts, however, this may lower the print speed.

Quiet Mode:

Select **On** to reduce noise during printing depending on the selected paper type and print quality, but print speed may decrease.

Ink Drying Time:

Select the ink drying time you want to use when performing 2-sided printing. The printer prints the other side after printing one side. If your printout is smeared, increase the time setting.

Bidirectional:

Select **On** to change the print direction; Prints while the print head moves to the left and to the right. If vertical or horizontal ruled lines on your printout look blurred or misaligned, disabling this feature may solve the problem; however, doing so may reduce print speed.

Density:

Adjusts the density for printing.

Clear All Settings

Resets the **Printer Settings** to their defaults.

Network Settings

Select the menus on the control panel as described below.

Settings > **Network Settings**

Wi-Fi Setup:

Set up or change wireless network settings. Choose the connection method from following and then follow the instructions on the control panel.

Wi-Fi (Recommended):

- ❏ Wi-Fi Setup Wizard
- ❏ Push Button Setup (WPS)
- ❏ Others
  - ❏ PIN Code Setup (WPS)
  - ❏ Wi-Fi Auto Connect
  - ❏ Disable Wi-Fi

    You may be able to resolve network problems by disabling the Wi-Fi settings or making the Wi-Fi settings again. Select > **Wi-Fi (Recommended)** > **Change Settings** > **Others** > **Disable Wi-Fi** > **Start Setup**.

Wi-Fi Direct:

- ❏ iOS
- ❏ Other OS Devices

❏ Menu

❏ Change Network Name

❏ Change Password

❏ Change Frequency Range

This setting may not be displayed depending on the region.

❏ Disable Wi-Fi Direct

❏ Restore Default Settings

Wired LAN Setup:

Set up or change a network connection that uses a LAN cable and router. When this is being used, Wi-Fi connections are disabled.

Network Status:

Displays or prints the current network settings.

❏ Wired LAN/Wi-Fi Status

❏ Wi-Fi Direct Status

❏ Print Status Sheet

Connection Check:

Checks the current network connection and prints a report. If there are any problems with the connection, see the report for solutions.

Advanced:

Make the following detailed settings.

❏ Device Name

❏ TCP/IP

❏ Proxy Server

Related Information

➡ "Making Wi-Fi Settings by Entering the SSID and Password" on page 237
➡ "Making Wi-Fi Settings by Push Button Setup (WPS)" on page 238
➡ "Connecting a Smart Device and Printer Directly (Wi-Fi Direct)" on page 240
➡ "Checking the Network Connection Status" on page 244

Web Service Settings

Select the menus on the control panel as described below.

Settings > **Web Service Settings**

Epson Connect Services:

Displays whether the printer is registered and connected to Epson Connect. You can register to the service by selecting **Register** and follow the instructions. When you have registered, you can change the following settings.

❏ Suspend/Resume

❏ Unregister

For details, see the following web site.

https://www.epsonconnect.com/

http://www.epsonconnect.eu (Europe only)

Related Information

➡ "Printing Using a Cloud Service" on page 97

File Sharing Setup

Select the menus on the control panel as described below.

Settings > **File Sharing Setup**

Select the connection method between the printer and a computer that will have write access to the memory card inserted in the printer. Read and write access is given to the computer with the priority connection. Only read access is given to other computers.

Camera Print Settings

Select the menus on the control panel as described below.

Settings > **Camera Print Settings**

Make settings when printing from a digital camera.

Related Information

➡ "Menu Options for Editing Photos" on page 54

Guide Functions

Select the menus on the control panel as described below.

Settings > **Guide Functions**

Paper Mismatch:

Displays a warning if the paper settings (print settings) for the print job do not match the printer's paper settings made when you loaded the paper. This setting prevents misprinting.

Auto Selection Mode:

When any of the following operations are performed, the menus appropriate to the operation are displayed.

❏ A memory card is inserted.

❏ A USB memory is inserted.

All settings:

Enables or disables all guide functions.

Clear All Settings:

Resets the **Guide Functions** settings to their defaults.

Customer Research

Select the menus on the control panel as described below.

Settings > **Customer Research**

Select **Approve** to provide product usage information such as the number of prints to Seiko Epson Corporation.

Firmware Update

Select the menus on the control panel as described below.

Settings > **Firmware Update**

Update:

Check if the latest version of the firmware has been uploaded to the network server. The firmware is updated when new firmware is found. Once the update has started, it cannot be interrupted.

Notification:

Select **On** to receive a notification if a firmware update is available.

Related Information

➡ "Updating the Printer's Firmware Using the Control Panel" on page 150

Restore Default Settings

Select the menus on the control panel as described below.

Settings > **Restore Default Settings**

Network Settings

Resets the network settings to the default.

All Except Network Settings

Resets all settings except for network settings to their defaults.

All Settings

Resets all settings to the default.

Product Specifications

Printer Specifications

Print Head Nozzle Placement		Black ink nozzles: 180 Color ink nozzles: 180 for each color
Weight of Paper*	Plain Paper	64 to 90 g/m²(17 to 24lb)
	Envelopes	Envelope #10, DL, C6: 75 to 100 g/m² (20 to 27 lb)

* Even when the paper thickness is within this range, the paper may not feed in the printer or the print quality may decline depending on the paper properties or quality.

Printable Area

Printable Area for Single Sheets

Print quality may decline in the shaded areas due to the printer's mechanism.

Printing with borders

When you print using the rear paper feed slot, you cannot print within the area 20.0 mm from the bottom edge.

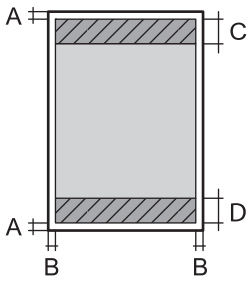

A	3.0 mm (0.12 in.)
B	3.0 mm (0.12 in.)
C	41.0 mm (1.62 in.)
D	37.0 mm (1.46 in.)

Borderless printing

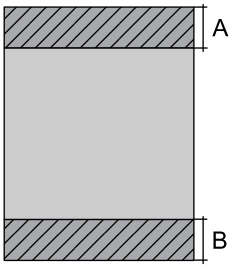

A	44.0 mm (1.73 in.)
B	40.0 mm (1.57 in.)

Printable Area for Envelopes

Print quality may decline in the shaded areas due to the printer's mechanism.

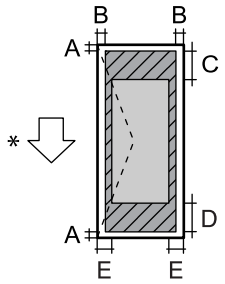	A	3.0 mm (0.12 in.)
	B	3.0 mm (0.12 in.)
	C	18.0 mm (0.71 in.)
	D	41.0 mm (1.62 in.)
	E	5.0 mm (0.20 in.)

*Direction of paper being fed.

Scanner Specifications

Scanner Type	Flatbed
Photoelectric Device	CIS
Maximum Document Size	216×297 mm (8.5×11.7 in.) A4, Letter
Resolution	1200 dpi (main scan) 4800 dpi (sub scan)
Color Depth	Color ❏ 48 bits per pixel internal (16 bits per pixel per color internal) ❏ 24 bits per pixel external (8 bits per pixel per color external) Grayscale ❏ 16 bits per pixel internal ❏ 8 bits per pixel external Black and white ❏ 16 bits per pixel internal ❏ 1 bits per pixel external
Light Source	LED

Interface Specifications

For Computer	Hi-Speed USB*
For External USB Devices and PictBridge	Hi-Speed USB

* USB 3.0 cables are not supported.

Network Specifications

Wi-Fi Specifications

See the following table for Wi-Fi specifications.

Countries or regions except for those listed below	Table A
Ireland, UK, Austria, Germany, Liechtenstein, Switzerland, France, Belgium, Luxemburg, Netherlands, Italy, Portugal, Spain, Denmark, Finland, Norway, Sweden, Iceland, Australia, New Zealand, China, South Korea	Table B
Guade Loupe, Martinique, Mayotte, New Caledonia, SaintPierre,Miquelon, Reunion, French Polynesia, French Guyana, Wallis Futuna	If you can select the following menu, see Table B. If you cannot, see Table A. **Settings** > **Network Settings** > **Wi-Fi Setup** > **Wi-Fi Direct** > Menu > **Change Frequency Range** *When you select the menu above, Wi-Fi Direct turns on. If you want to turn off Wi-Fi Direct, select **Settings** > **Network Settings** > **Wi-Fi Setup** > **Wi-Fi Direct** > Menu > **Disable Wi-Fi Direct**

Table A

Standards	IEEE802.11b/g/n*1
Frequency Range	2.4 GHz
Channels	1/2/3/4/5/6/7/8/9/10/11/12/13
Coordination Modes	Infrastructure, Wi-Fi Direct (Simple AP)*2*3
Security Protocols*4	WEP (64/128bit), WPA2-PSK (AES)*5, WPA3-SAE (AES)

*1: Only available for the HT20

*2: Not supported for IEEE 802.11b

*3: Infrastructure and Wi-Fi Direct modes or an Ethernet connection can be used simultaneously.

*4: Wi-Fi Direct supports WPA2-PSK (AES) only.

*5: Complies with WPA2 standards with support for WPA/WPA2 Personal.

Table B

Standards	IEEE802.11a/b/g/n*1/ac
Frequency Ranges	IEEE802.11b/g/n: 2.4 GHz, IEEE802.11a/n/ac: 5 GHz

Channels	Wi-Fi	2.4 GHz	1/2/3/4/5/6/7/8/9/10/11/12/13
		5 GHz*2	W52 (36/40/44/48), W53 (52/56/60/64), W56 (100/104/108/112/116/120/124/128/132/136/140), W58 (149/153/157/161/165)
	Wi-Fi Direct	2.4 GHz	1/2/3/4/5/6/7/8/9/10/11/12/13
		5 GHz*2	W52 (36/40/44/48) W58 (149/153/157/161/165)
Connection Modes	Infrastructure, Wi-Fi Direct (Simple AP)*3*4		
Security Protocols*5	WEP (64/128bit), WPA2-PSK (AES)*6, WPA3-SAE (AES)		

*1: Only available for the HT20

*2: The availability of these channels and use of the product outdoors over these channels varies by location. For more information, see https://support.epson.net/wifi5ghz/

*3: Not supported for IEEE 802.11b

*4: Infrastructure and Wi-Fi Direct modes or an Ethernet connection can be used simultaneously.

*5: Wi-Fi Direct only supports WPA2-PSK (AES) .

*6: Complies with WPA2 standards with support for WPA/WPA2 Personal.

Ethernet Specifications

Standards	IEEE802.3i (10BASE-T)*1 IEEE802.3u (100BASE-TX) IEEE802.3az (Energy Efficient Ethernet)*2
Communication Mode	Auto, 10Mbps Full duplex, 10Mbps Half duplex, 100Mbps Full duplex, 100Mbps Half duplex
Connector	RJ-45

*1 Use a category 5e or higher STP (Shielded twisted pair) cable to prevent risk of radio interference.

*2 The connected device should comply with IEEE802.3az standards.

Network Functions and IPv4/IPv6

Functions			Supported	Remarks
Network Printing	EpsonNet Print (Windows)	IPv4	✓	-
	Standard TCP/IP (Windows)	IPv4, IPv6	✓	-
	WSD Printing (Windows)	IPv4, IPv6	✓	Windows Vista or later
	Bonjour Printing (Mac OS)	IPv4, IPv6	✓	-
	IPP Printing (Windows, Mac OS)	IPv4, IPv6	✓	-
	PictBridge Printing (Wi-Fi)	IPv4	✓	Digital camera
	Epson Connect (Email Print, Remote Print)	IPv4	✓	-
	AirPrint (iOS, Mac OS)	IPv4, IPv6	✓	iOS 5 or later, Mac OS X v10.7 or later
Network Scanning	Epson Scan 2	IPv4, IPv6	✓	-
	Epson ScanSmart	IPv4	✓	Windows 7 or later, Mac OS X El Capitan or later
	Event Manager	IPv4	✓	Windows XP, Vista, Mac OS X v10.6 to Yosemite
	Epson Connect (Scan to Cloud)	IPv4	✓	-
	AirPrint (Scan)	IPv4, IPv6	✓	OS X Mavericks or later
Fax	Send a fax	IPv4	-	-
	Receive a fax	IPv4	-	-
	AirPrint (Faxout)	IPv4, IPv6	-	-

Security Protocol

SSL/TLS	HTTPS Server/Client, IPPS
SNMPv3	

Supported Third Party Services

AirPrint	Print	iOS 5 or later/Mac OS X v10.7.x or later
	Scan	OS X Mavericks or later

Memory Device Specifications

Supported Memory Card Specifications

Compatible Memory Cards	Maximum Capacities
miniSD*	2 GB
miniSDHC*	32 GB
microSD*	2 GB
microSDHC*	32 GB
microSDXC*	64 GB
SD	2 GB
SDHC	32 GB
SDXC	64 GB

* Attach an adapter to fit the memory card slot. Otherwise, the card may get stuck.

Supported Memory Device Specifications

Compatible Memory Devices	Maximum Capacities
CD-R Drive*1*2 DVD-R Drive*1*2 Blu-ray™ Drive*1*2	CD-ROM/CD-R: 700 MB DVD-ROM/DVD-R: 4.7 GB (CD-RW, DVD+R, DVD±RW, DVD-RAM, and Blu-ray Disc™ are not supported.)
HDD*1 USB Flash Drive	2 TB (formatted in FAT, FAT32, or exFAT)
Multi-card reader*3	2 TB (formatted in FAT, FAT32, or exFAT)

*1 We do not recommend using memory devices that are powered by USB. Use only memory devices with independent AC power supplies.

*2 Read only.

*3 Only insert one memory card into the multi-card reader. Multi-card readers with more than two memory cards inserted are not supported.

You cannot use the following devices:

- ❏ A device that requires a dedicated driver
- ❏ A device with security settings (password, encryption, and so on)
- ❏ A device with a built-in USB hub

Epson cannot guarantee operations for all externally connected devices.

Supported Data Specifications

File Format	JPEGs (*.JPG) with the Exif Version 2.31 standard taken by digital cameras DCF*1Version 1.0 or 2.0*2 compliant
Image Size	Horizontal: 80 to 10200 pixels Vertical: 80 to 10200 pixels
File Size	Less than 2 GB
Maximum Number of Files	9990

*1 Design rule for Camera File system.

*2 Photo data stored in the built-in memory of a digital camera is not supported.

Note:
"!" is displayed on the LCD screen when the printer cannot recognize the image file. In this situation, if you select a multiple image layout, blank sections will be printed.

Dimensions

Dimensions	Storage ❏ Width: 403 mm (15.9 in.) ❏ Depth: 369 mm (14.5 in.) ❏ Height: 162 mm (6.4 in.) Printing ❏ Width: 403 mm (15.9 in.) ❏ Depth: 612 mm (24.1 in.) ❏ Height: 347 mm (13.7 in.)
Weight*	Approx. 8.4 kg (18.5 lb)

* Without the ink and the power cord.

Electrical Specifications

Power Supply Rating	AC 100-120 V	AC 220-240 V	AC 220-240 V*
Rated Frequency Range	50-60 Hz	50-60 Hz	50-60 Hz
Rated Current	0.6 A	0.3 A	0.3 A
Power Consumption (with USB Connection)	Standalone copying: Approx. 17.0 W (ISO/IEC24712) Ready mode: Approx. 7.4 W Sleep mode: Approx. 0.8 W Power off: Approx. 0.2 W	Standalone copying: Approx. 17.0 W (ISO/IEC24712) Ready mode: Approx. 7.5 W Sleep mode: Approx. 0.8 W Power off: Approx. 0.3 W	Standalone copying: Approx. 17.0 W (ISO/IEC24712) Ready mode: Approx. 7.5 W Sleep mode: Approx. 0.9 W Power off: Approx. 0.2 W

* For users in Middle East, Dom. Tom., Africa, and China.

Note:

❏ *Check the label on the printer for its voltage.*

❏ *For European users, see the following Website for details on power consumption.*

https://www.epson.eu/energy-consumption

Environmental Specifications

Operation	Use the printer within the range shown in the following graph. 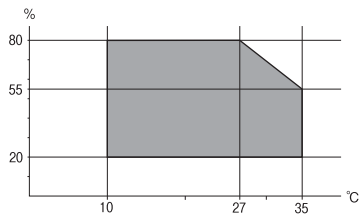 Temperature: 10 to 35°C (50 to 95°F) Humidity: 20 to 80% RH (without condensation)
Storage	Temperature: -20 to 40°C (-4 to 104°F)* Humidity: 5 to 85% RH (without condensation)

* You can store for one month at 40°C (104°F).

Environmental Specifications for Ink Bottles

Storage Temperature	-30 to 40 °C (-22 to 104 °F)*
Freezing Temperature	-16 °C (3.2 °F) Ink thaws and is usable after approximately 3 hours at 25 °C (77 °F).

* You can store ink bottles for one month at 40 °C (104 °F).

System Requirements

❏ Windows

Windows Vista, Windows 7, Windows 8/8.1, Windows 10 or later (32-bit, 64-bit)

Windows XP SP3 (32-bit)

Windows XP Professional x64 Edition SP2

Windows Server 2003 (SP2) or later

❏ Mac OS

Mac OS X v10.6.8 or later

Note:
- *Mac OS may not support some applications and features.*
- *The UNIX File System (UFS) for Mac OS is not supported.*

Regulatory Information

Standards and Approvals

Standards and Approvals for U.S. Model

Safety	UL60950-1 CAN/CSA-C22.2 No.60950-1
EMC	FCC Part 15 Subpart B Class B CAN ICES-3 (B)/NMB-3 (B)

This equipment contains the following wireless module.

Manufacturer: Seiko Epson Corporation

Type: J26H005

This product conforms to Part 15 of the FCC Rules and RSS-210 of the IC Rules. Epson cannot accept responsibility for any failure to satisfy the protection requirements resulting from a non-recommended modification of the product. Operation is subject to the following two conditions: (1) this device may not cause harmful interference, and (2) this device must accept any interference received, including interference that may cause undesired operation of the device.

To prevent radio interference to the licensed service, this device is intended to be operated indoors and away from windows to provide maximum shielding. Equipment (or its transmit antenna) that is installed outdoors is subject to licensing.

This equipment complies with FCC/IC radiation exposure limits set forth for an uncontrolled environment and meets the FCC radio frequency (RF) Exposure Guidelines in Supplement C to OET65 and RSS-102 of the IC radio frequency (RF) Exposure rules. This equipment should be installed and operated so that the radiator is kept at least 7.9 inches (20 cm) or more away from a person's body (excluding extremities: hands, wrists, feet and ankles).

Standards and Approvals for European Model

For European users

Hereby, Seiko Epson Corporation declares that the following radio equipment model is in compliance with Directive 2014/53/EU. The full text of the EU declaration of conformity is available at the following website.

https://www.epson.eu/conformity

C721A

For use only in Ireland, UK, Austria, Germany, Liechtenstein, Switzerland, France, Belgium, Luxemburg, Netherlands, Italy, Portugal, Spain, Denmark, Finland, Norway, Sweden, Iceland, Croatia, Cyprus, Greece, Slovenia, Malta, Bulgaria, Czechia, Estonia, Hungary, Latvia, Lithuania, Poland, Romania, and Slovakia.

Epson cannot accept responsibility for any failure to satisfy the protection requirements resulting from a non-recommended modification of the products.

Frequency	Maximum Radio-Frequency Power Transmitted
2400-2483.5 MHz	20 dBm (EIRP)
5150-5250 MHz	20 dBm (EIRP)
5250-5350 MHz	20 dBm (EIRP)
5470-5725 MHz	20 dBm (EIRP)

CE

Standards and Approvals for Australian Model

EMC	AS/NZS CISPR32 Class B

Epson hereby declares that the following equipment Models are in compliance with the essential requirements and other relevant provisions of AS/NZS4268:

C721A

Epson cannot accept responsibility for any failure to satisfy the protection requirements resulting from a non-recommended modification of the products.

ZICTA Type Approval for Users in Zambia

See the following website to check the information for ZICTA Type Approval.

https://support.epson.net/zicta/

Restrictions on Copying

Observe the following restrictions to ensure the responsible and legal use of the printer.

Copying of the following items is prohibited by law:

- ❏ Bank bills, coins, government-issued marketable securities, government bond securities, and municipal securities
- ❏ Unused postage stamps, pre-stamped postcards, and other official postal items bearing valid postage
- ❏ Government-issued revenue stamps, and securities issued according to legal procedure

Exercise caution when copying the following items:

- ❏ Private marketable securities (stock certificates, negotiable notes, checks, etc.), monthly passes, concession tickets, etc.
- ❏ Passports, driver's licenses, warrants of fitness, road passes, food stamps, tickets, etc.

Note:
Copying these items may also be prohibited by law.

Responsible use of copyrighted materials:

Printers can be misused by improperly copying copyrighted materials. Unless acting on the advice of a knowledgeable attorney, be responsible and respectful by obtaining the permission of the copyright holder before copying published material.

Where to Get Help

Technical Support Web Site. 286

Contacting Epson Support. 286

Technical Support Web Site

If you need further help, visit the Epson support website shown below. Select your country or region and go to the support section of your local Epson website. The latest drivers, FAQs, manuals, or other downloadables are also available from the site.

https://support.epson.net

https://www.epson.eu/support (Europe)

If your Epson product is not operating properly and you cannot solve the problem, contact Epson support services for assistance.

Contacting Epson Support

Before Contacting Epson

If your Epson product is not operating properly and you cannot solve the problem using the troubleshooting information in your product manuals, contact Epson support services for assistance. If Epson support for your area is not listed below, contact the dealer where you purchased your product.

Epson support will be able to help you much more quickly if you give them the following information:

- ❏ Product serial number
  (The serial number label is usually on the back of the product.)
- ❏ Product model
- ❏ Product software version
  (Click **About**, **Version Info**, or a similar button in the product software.)
- ❏ Brand and model of your computer
- ❏ Your computer operating system name and version
- ❏ Names and versions of the software applications you normally use with your product

Note:
Depending on the product, network settings may be stored in the product's memory. Due to breakdown or repair of a product, settings may be lost. Epson shall not be responsible for the loss of any data, for backing up or recovering settings even during a warranty period. We recommend that you make your own backup data or take notes.

Help for Users in Europe

Check your Pan-European Warranty Document for information on how to contact Epson support.

Help for Users in Australia

Epson Australia wishes to provide you with a high level of customer service. In addition to your product manuals, we provide the following sources for obtaining information:

Internet URL

https://www.epson.com.au

Access the Epson Australia World Wide Web pages. Worth taking your modem here for the occasional surf! The site provides a download area for drivers, Epson contact points, new product information and technical support (e-mail).

Epson Helpdesk

Phone: 1300-361-054

Epson Helpdesk is provided as a final backup to make sure our clients have access to advice. Operators on the Helpdesk can aid you in installing, configuring and operating your Epson product. Our Pre-sales Helpdesk staff can provide literature on new Epson products and advise where the nearest dealer or service agent is located. Many types of queries are answered here.

We encourage you to have all the relevant information on hand when you ring. The more information you prepare, the faster we can help solve the problem. This information includes your Epson product manuals, type of computer, operating system, application programs, and any information you feel is required.

Transportation of Product

Epson recommends retaining product packaging for future transportation. Securing the ink tank with tape and keeping the product upright is also recommended.

Help for Users in New Zealand

Epson New Zealand wishes to provide you with a high level of customer service. In addition to your product documentation, we provide the following sources for obtaining information:

Internet URL

https://www.epson.co.nz

Access the Epson New Zealand World Wide Web pages. Worth taking your modem here for the occasional surf! The site provides a download area for drivers, Epson contact points, new product information and technical support (e-mail).

Epson Helpdesk

Phone: 0800 237 766

Epson Helpdesk is provided as a final backup to make sure our clients have access to advice. Operators on the Helpdesk can aid you in installing, configuring and operating your Epson product. Our Pre-sales Helpdesk staff can provide literature on new Epson products and advise where the nearest dealer or service agent is located. Many types of queries are answered here.

We encourage you to have all the relevant information on hand when you ring. The more information you prepare, the faster we can help solve the problem. This information includes your Epson product documentation, type of computer, operating system, application programs, and any information you feel is required.

Transportation of Product

Epson recommends retaining product packaging for future transportation. Securing the ink tank with tape and keeping the product upright is also recommended.