EPSON
EXCEED YOUR VISION

ET-M1100 / M1100 Series
User's Guide

NPD5969-05 EN

Contents

About This Manual

Introduction to the Manuals. 4
Using the Manual to Search for Information. 4
Marks and Symbols. 5
Descriptions Used in this Manual. 6
Operating System References. 6

Important Instructions

Safety Instructions. 7
Safety Instructions for Ink. 7
Printer Advisories and Warnings. 7
Advisories and Warnings for Setting Up the Printer. 8
Advisories and Warnings for Using the Printer. . . 8
Advisories and Warnings for Transporting or Storing the Printer. 9

Printer Basics

Part Names and Functions. 10
Control Panel. 11
Buttons and Functions. 11
Lights and Printer Status. 12

Preparing the Printer

Loading Papers. 14
Available Paper and Capacities. 14
Loading Paper in the Paper Cassette. 16
Loading Envelopes and Precautions. 19
List of Paper Type. 19
Saving Power. 20
Saving Power - Windows. 20
Saving Power - Mac OS. 20

Printing

Printing from the Printer Driver on Windows. 22
Accessing the Printer Driver. 22
Printing Basics. 22
Printing on 2-Sides. 24
Printing Several Pages on One Sheet. 25
Printing and Stacking in Page Order (Reverse Order Printing). 25
Printing a Reduced or Enlarged Document. 26
Printing One Image on Multiple Sheets for Enlargement (Creating a Poster). 26
Printing with a Header and Footer. 32
Printing a Watermark. 33
Printing Multiple Files Together. 33
Adjusting the Print Tone. 34
Printing to Emphasize Thin Lines. 35
Printing to Enhance Light Text and Lines. 35
Printing Clear Bar Codes. 36
Canceling Printing. 36
Menu Options for the Printer Driver. 36
Printing from the Printer Driver on Mac OS. 39
Printing Basics. 39
Printing Several Pages on One Sheet. 41
Printing and Stacking in Page Order (Reverse Order Printing). 41
Printing a Reduced or Enlarged Document. 42
Canceling Printing. 42
Menu Options for the Printer Driver. 43
Making Operation Settings for the Mac OS Printer Driver. 44
Canceling Printing - Printer Button. 44

Refilling Ink

Checking the Ink Level. 45
Ink Bottle Codes. 45
Ink Bottle Handling Precautions. 46
Refilling the Ink Tank. 47

Maintaining the Printer

Preventing the Print Head from Drying. 53
Check if Nozzles are Clogged (Nozzle Check). . . . 53
Check if Nozzles are Clogged (Nozzle Check) - Printer Buttons. 53
Check if Nozzles are Clogged (Nozzle Check) - Windows. 54
Check if Nozzles are Clogged (Nozzle Check) - Mac OS. 55
Cleaning the Print Head (Head Cleaning). 56
Cleaning the Print Head - Printer Buttons. 56
Cleaning the Print Head - Windows. 57
Cleaning the Print Head - Mac OS. 57
Power Cleaning the Print Head (Power Cleaning). . 57
Running Power Cleaning - Windows. 58
Running Power Cleaning - Mac OS. 58
Aligning the Print Head. 59
Aligning the Print Head - Windows. 59

Aligning the Print Head - Mac OS. 59
Cleaning the Paper Path. 59
Cleaning the Paper Path - Windows. 60
Cleaning the Paper Path - Mac OS X. 60
Cleaning the Paper Path for Paper Feeding Problems. 60
Cleaning the Translucent Film. 62
Checking the Total Number of Pages Fed Through the Printer. 64
Checking the Total Number of Pages Fed Through the Printer - Printer Buttons. 64
Checking the Total Number of Pages Fed Through the Printer - Windows. 64
Checking the Total Number of Pages Fed Through the Printer - Mac OS. 65

Software Information

Application for Printing Web Pages (E-Web Print). . 66
Software Update Tools (EPSON Software Updater). 66
Installing Applications. 67
Updating Applications and Firmware. 67
Uninstalling Applications. 68
Uninstalling Applications - Windows. 68
Uninstalling Applications - Mac OS. 69

Solving Problems

Checking the Printer Status. 70
Lights and Printer Status. 70
Checking the Printer Status - Windows. 71
Checking the Printer Status - Mac OS. 72
Checking the Software Status. 72
Removing Jammed Paper. 72
Removing Jammed Paper from Inside the Printer. 73
Removing Jammed Paper from Rear Cover. 74
Paper Does Not Feed Correctly. 75
Paper Jams. 75
Paper Feeds at a Slant. 76
Several Sheets of Paper are Fed at a Time. 76
Power and Control Panel Problems. 76
Power Does Not Turn On. 76
Power Does Not Turn Off. 76
Power Turns Off Automatically. 76
Cannot Print from a Computer. 77
Checking the Connection (USB). 77
Checking the Software and Data. 77
Checking the Printer Status from the Computer (Windows). 79
Checking the Printer Status from the Computer (Mac OS). 80
Printout Problems. 80
Printout is Scuffed or Color is Missing. 80
Banding Appears. 81
Colored Banding Appears at Intervals of Approximately 2.5 cm. 81
Vertical Banding or Misalignment. 82
Print Quality is Poor. 82
Paper Is Smeared or Scuffed. 83
Printed Photos are Sticky. 84
The Position, Size, or Margins of the Printout Are Incorrect. 84
Printed Characters Are Incorrect or Garbled. . . . 84
The Printed Image Is Inverted. 84
Mosaic-Like Patterns in the Prints. 85
The Printout Problem Could Not be Cleared. . . . 85
Other Printing Problems. 85
Printing Is Too Slow. 85
Printing Slows Down Dramatically During Continuous Printing. 86
Other Problems. 86
Slight Electric Shock when Touching the Printer. 86
Operation Sounds Are Loud. 86
Application Is Blocked by a Firewall (for Windows Only). 86
Ink Spilled. 86

Appendix

Technical Specifications. 87
Printer Specifications. 87
Interface Specifications. 88
Dimensions. 88
Electrical Specifications. 88
Environmental Specifications. 89
System Requirements. 89
Regulatory Information. 90
Standards and Approvals. 90
Restrictions on Copying. 90
Transporting and Storing the Printer. 90
Copyright. 93
Trademarks. 93
Where to Get Help. 94
Technical Support Web Site. 94
Contacting Epson Support. 94

About This Manual

Introduction to the Manuals

The following manuals are supplied with your Epson printer. As well as the manuals, see the help included in the various Epson software applications.

❏ Start Here (paper manual)

Provides you with information on setting up the printer, installing the software, using the printer, solving problems, and so on.

❏ User's Guide (digital manual)

This manual. Provides overall information and instructions on using the printer, and on solving problems.

You can obtain the latest versions of the above manuals with the following methods.

❏ Paper manual

Visit the Epson Europe support website at http://www.epson.eu/Support, or the Epson worldwide support website at http://support.epson.net/.

❏ Digital manual

Start EPSON Software Updater on your computer. EPSON Software Updater checks for available updates of Epson software applications and the digital manuals, and allows you to download the latest ones.

Related Information

➡ "Software Update Tools (EPSON Software Updater)" on page 66

Using the Manual to Search for Information

The PDF manual allows you to search for information you are looking for by keyword, or jump directly to specific sections using the bookmarks. You can also print only the pages you need. This section explains how to use a PDF manual that has been opened in Adobe Reader X on your computer.

Searching by keyword

Click **Edit** > **Advanced Search**. Enter the keyword (text) for information you want to find in the search window, and then click **Search**. Hits are displayed as a list. Click one of the displayed hits to jump to that page.

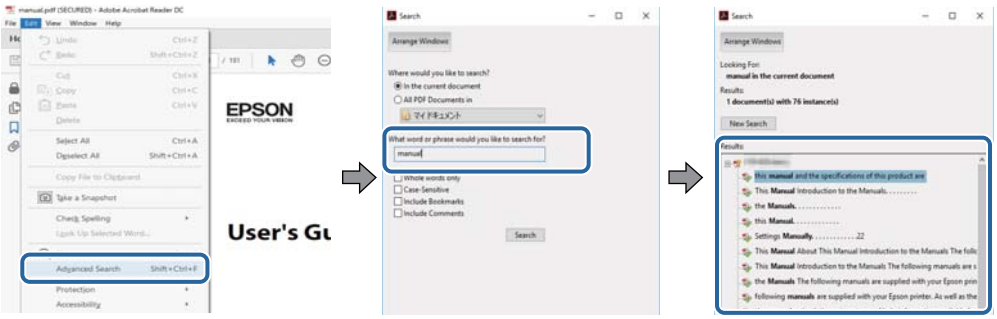

Jumping directly from bookmarks

Click a title to jump to that page. Click + or > to view the lower level titles in that section. To return to the previous page, perform the following operation on your keyboard.

❏ Windows: Hold down **Alt**, and then press ←.

❏ Mac OS: Hold down the command key, and then press ←.

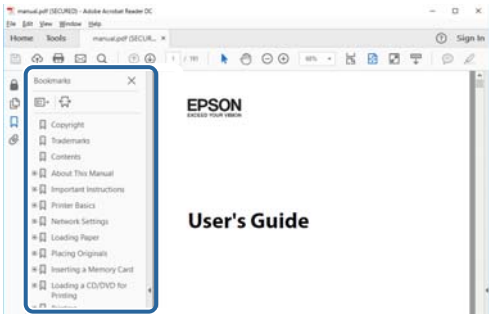

Printing only the pages you need

You can extract and print only the pages you need. Click **Print** in the **File** menu, and then specify the pages you want to print in **Pages** in **Pages to Print**.

❏ To specify a series of pages, enter a hyphen between the start page and the end page.

Example: 20-25

❏ To specify pages that are not in series, divide the pages with commas.

Example: 5, 10, 15

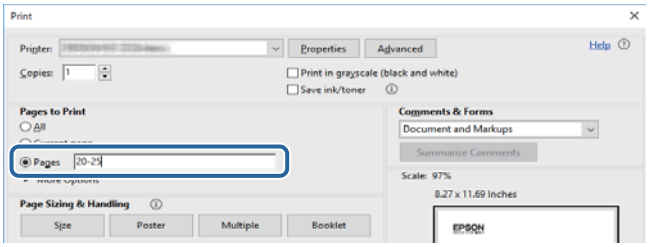

Marks and Symbols

Caution:

Instructions that must be followed carefully to avoid bodily injury.

Important:

Instructions that must be observed to avoid damage to your equipment.

Note:

Provides complementary and reference information.

➡ Related Information

Links to related sections.

Descriptions Used in this Manual

- Screenshots of the printer driver screens are from Windows 10 or macOS High Sierra. The content displayed on the screens varies depending on the model and situation.
- Illustrations of the printer used in this manual are examples only. Although there may be slight differences depending on the model, the method of operation is the same.

Operating System References

Windows

In this manual, terms such as "Windows 10", "Windows 8.1", "Windows 8", "Windows 7", "Windows Vista", "Windows XP", "Windows Server 2016", "Windows Server 2012 R2", "Windows Server 2012", "Windows Server 2008 R2", "Windows Server 2008", "Windows Server 2003 R2", and "Windows Server 2003" refer to the following operating systems. Additionally, "Windows" is used to refer to all versions.

- Microsoft® Windows® 10 operating system
- Microsoft® Windows® 8.1 operating system
- Microsoft® Windows® 8 operating system
- Microsoft® Windows® 7 operating system
- Microsoft® Windows Vista® operating system
- Microsoft® Windows® XP operating system
- Microsoft® Windows® XP Professional x64 Edition operating system
- Microsoft® Windows Server® 2016 operating system
- Microsoft® Windows Server® 2012 R2 operating system
- Microsoft® Windows Server® 2012 operating system
- Microsoft® Windows Server® 2008 R2 operating system
- Microsoft® Windows Server® 2008 operating system
- Microsoft® Windows Server® 2003 R2 operating system
- Microsoft® Windows Server® 2003 operating system

Mac OS

In this manual, "Mac OS" is used to refer to macOS High Sierra, macOS Sierra, OS X El Capitan, OS X Yosemite, OS X Mavericks, OS X Mountain Lion, Mac OS X v10.7.x, and Mac OS X v10.6.8.

Important Instructions

Safety Instructions

Read and follow these instructions to ensure safe use of this printer. Make sure you keep this manual for future reference. Also, be sure to follow all warnings and instructions marked on the printer.

- Some of the symbols used on your printer are to ensure safety and proper use of the printer. Visit the following Web site to learn the meaning of the symbols.

  http://support.epson.net/symbols

- Use only the power cord supplied with the printer and do not use the cord with any other equipment. Use of other cords with this printer or the use of the supplied power cord with other equipment may result in fire or electric shock.
- Be sure your AC power cord meets the relevant local safety standard.
- Never disassemble, modify, or attempt to repair the power cord, plug, printer unit, or options by yourself, except as specifically explained in the printer's manuals.
- Unplug the printer and refer servicing to qualified service personnel under the following conditions:

  The power cord or plug is damaged; liquid has entered the printer; the printer has been dropped or the casing damaged; the printer does not operate normally or exhibits a distinct change in performance. Do not adjust controls that are not covered by the operating instructions.

- Place the printer near a wall outlet where the plug can be easily unplugged.
- Do not place or store the printer outdoors, near excessive dirt or dust, water, heat sources, or in locations subject to shocks, vibrations, high temperature or humidity.
- Take care not to spill liquid on the printer and not to handle the printer with wet hands.

Safety Instructions for Ink

- Be careful not to touch ink when you handle the ink tank, ink tank cap, and opened ink bottle or ink bottle cap.
  - If ink gets on your skin, wash the area thoroughly with soap and water.
  - If ink gets into your eyes, flush them immediately with water. If discomfort or vision problems continue after a thorough flushing, see a doctor immediately.
  - If ink gets into your mouth, see a doctor right away.
- Do not shake an ink bottle too vigorously or subject it to strong impacts as this can cause ink to leak.
- Keep ink bottle and the ink tank unit out of the reach of children. Do not allow children to drink from or handle the ink bottle and ink bottle cap.

Printer Advisories and Warnings

Read and follow these instructions to avoid damaging the printer or your property. Make sure you keep this manual for future reference.

Advisories and Warnings for Setting Up the Printer

- ❏ Do not block or cover the vents and openings in the printer.
- ❏ Use only the type of power source indicated on the printer's label.
- ❏ Avoid using outlets on the same circuit as photocopiers or air control systems that regularly switch on and off.
- ❏ Avoid electrical outlets controlled by wall switches or automatic timers.
- ❏ Keep the entire computer system away from potential sources of electromagnetic interference, such as loudspeakers or the base units of cordless telephones.
- ❏ The power-supply cords should be placed to avoid abrasions, cuts, fraying, crimping, and kinking. Do not place objects on top of the power-supply cords and do not allow the power-supply cords to be stepped on or run over. Be particularly careful to keep all the power-supply cords straight at the ends and the points where they enter and leave the transformer.
- ❏ If you use an extension cord with the printer, make sure that the total ampere rating of the devices plugged into the extension cord does not exceed the cord's ampere rating. Also, make sure that the total ampere rating of all devices plugged into the wall outlet does not exceed the wall outlet's ampere rating.
- ❏ If you plan to use the printer in Germany, the building installation must be protected by a 10 or 16 amp circuit breaker to provide adequate short-circuit protection and over-current protection for the printer.
- ❏ When connecting the printer to a computer or other device with a cable, ensure the correct orientation of the connectors. Each connector has only one correct orientation. Inserting a connector in the wrong orientation may damage both devices connected by the cable.
- ❏ Place the printer on a flat, stable surface that extends beyond the base of the printer in all directions. The printer will not operate properly if it is tilted at an angle.
- ❏ Allow space above the printer so that you can fully raise the printer cover.
- ❏ Leave enough space in front of the printer for the paper to be fully ejected.
- ❏ Avoid places subject to rapid changes in temperature and humidity. Also, keep the printer away from direct sunlight, strong light, or heat sources.

Advisories and Warnings for Using the Printer

- ❏ Do not insert objects through the slots in the printer.
- ❏ Do not put your hand inside the printer during printing.
- ❏ Do not touch the white flat cable inside the printer.
- ❏ Do not use aerosol products that contain flammable gases inside or around the printer. Doing so may cause fire.
- ❏ Do not move the print head by hand; otherwise, you may damage the printer.
- ❏ If the ink tank is not filled up to the lower line, refill the ink soon. Prolonged use of the printer when the ink level is below the lower line could damage the printer.
- ❏ Always turn the printer off using the ⏻ button. Do not unplug the printer or turn off the power at the outlet until the ⏻ light stops flashing.
- ❏ If you are not going to use the printer for a long period, be sure to unplug the power cord from the electrical outlet.

Advisories and Warnings for Transporting or Storing the Printer

- When storing or transporting the printer, avoid tilting it, placing it vertically, or turning it upside down; otherwise ink may leak.
- Before transporting the printer, make sure that the print head is in the home (far right) position.

Printer Basics

Part Names and Functions

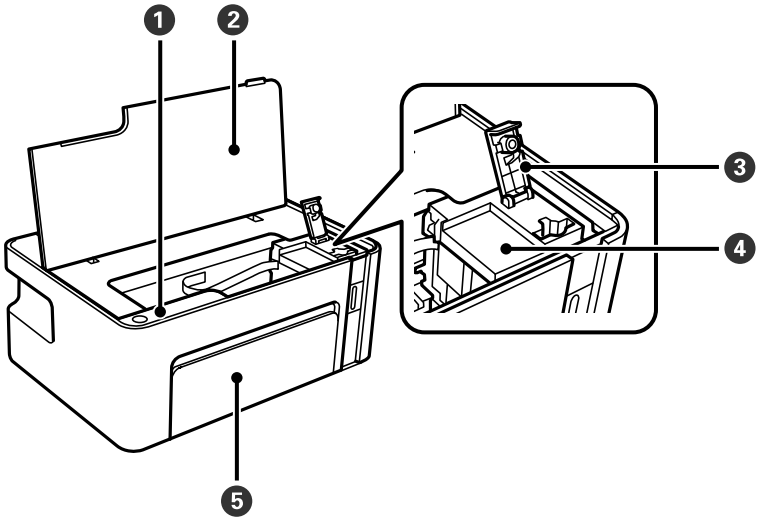

1	Control panel	Allows you to operate the printer and indicates the printer's status.
2	Printer cover	Open to refill the ink tank or to remove jammed paper.
3	Ink tank cap	Open to refill the ink tank.
4	Ink tank	Contains black ink and is located on the print head.
5	front cover	Open to load paper in the paper cassette.

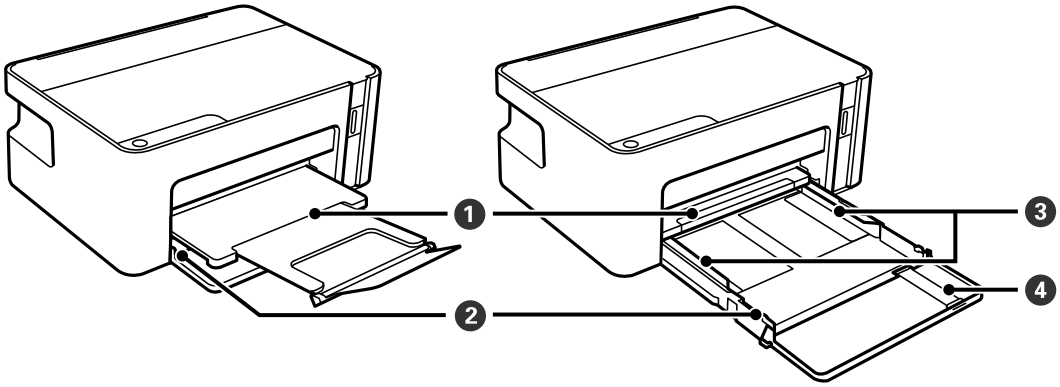

1	Output tray	Holds the ejected paper.
2	Paper cassette	Loads paper.
3	Edge guide	Feeds the paper straight into the printer. Slide to the edges of the paper.
4	paper guide extension	Slide out to load legal size paper.

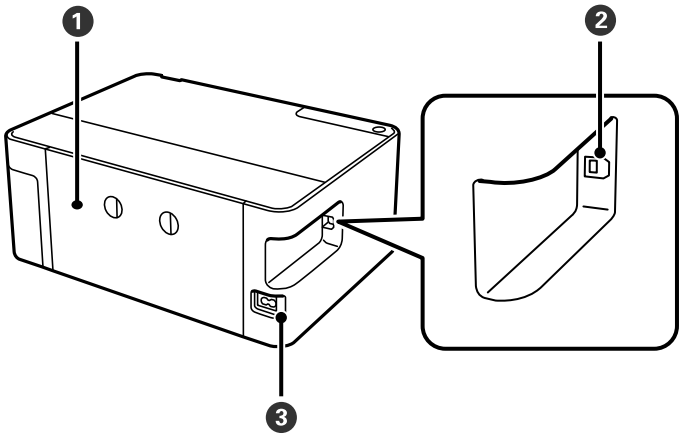

❶	Rear cover	Remove when removing jammed paper.
❷	USB port	Connects a USB cable to connect with a computer.
❸	AC inlet	Connects the power cord.

Control Panel

Buttons and Functions

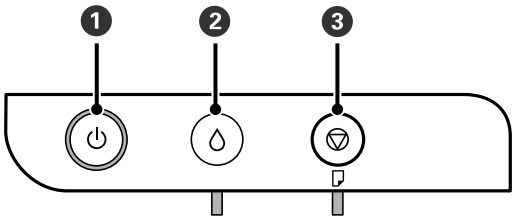

❶	Turns the printer on or off. Unplug the power cord after checking that the power light is off.
❷	When a error occurs, pressing this button cancels the error. Hold this button down for more than five seconds to move the ink tank to the ink refilling position, or to return it to the home position.
❸	Stops the current operation. Cancels paper out errors and paper jam errors. Hold this button down for five seconds until the ⏻ button flashes to run print head cleaning.

Functions using Button Combination

+	**Print Nozzle Check Pattern** Turn the printer on while holding down the button to print the nozzle check pattern. The total number of pages fed through the printer is also printed as well as the nozzle check pattern.

Lights and Printer Status

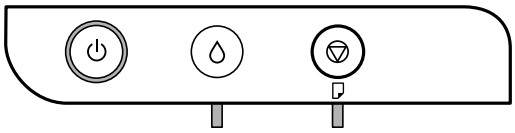

When an error occurs, the light turns on or flashes. Details of the error are displayed on the computer screen.

: On

: Flashing

Light	Situation	Solutions
	Initial ink charging may not be complete.	See the *Start Here* poster to complete initial ink charging.
	Ink refilling may not be complete.	Refill the ink inside the ink tank, and then press the button to return the tank to the home position.
	Ink tank cap is not fully closed.	Push in the cap firmly, and then press the button.
	No paper is loaded or more than one sheet has been fed at a time.	Load paper and press the button.
	A paper jam has occurred.	Remove the paper and press the button.
	Protective material may be inside the printer.	Open the printer cover, remove the protective material, and then press the button.

Light	Situation	Solutions
	When the power is on or flashing ❏ The printer was not turned off correctly.* ❏ Because the printer was turned off while operating, the nozzles may have dried and clogged. * The power was turned off with a power strip or breaker, the plug was pulled out of the outlet, or an electrical failure occurred.	❏ After clearing the error by pressing the button, we recommend performing a nozzle check. Cancel any pending print jobs. ❏ To turn off the printer, make sure you press the button.
	When the power is off The printer has started in recovery mode because the firmware update failed.	Follow the steps below to try to update the firmware again. 1. Connect the computer and the printer with a USB cable. 2. Visit your local Epson website for further instructions.
	When the light and the light flash simultaneously An ink pad is nearing or at the end of its service life.	The ink pads need to be replaced. Contact Epson or an authorised Epson service provider to replace the ink pad *1. It is not a user-serviceable part. When a message saying that you can continue printing is displayed on the computer, press the button to continue printing. The lights stop flashing for the time being, however, they will continue to flash at regular intervals until the ink pad is replaced.
	A printer error has occurred.	Open the front cover and remove any paper inside the printer. Turn the power off and on again. If the error continues to occur after turning the power off and on again, contact Epson support.

*1 In some print cycles a very small amount of surplus ink may be collected in the ink pad. To prevent ink leakage from the pad, the printer is designed to stop printing when the pad has reached its limit. Whether and how often this is required will vary according to the number of pages you print, the type of material that you print and the number of cleaning cycles that the printer performs. The need for replacement of the pad does not mean that your printer has ceased to operate in accordance with its specifications. The printer will advise you when the pad requires replacing and this can only be performed by an authorised Epson Service provider. The Epson warranty does not cover the cost of this replacement.

Related Information

➡ "Removing Jammed Paper" on page 72
➡ "Contacting Epson Support" on page 94
➡ "Installing Applications" on page 67

Preparing the Printer

Loading Papers

Available Paper and Capacities

Note:
The paper size displayed differs depending on the driver.

Genuine Epson Paper

Epson recommends using genuine Epson paper to ensure high-quality printouts.

Note:
The availability of paper varies by location. For the latest information on paper available in your area, contact Epson support.

Paper suitable for printing documents

Media Name	Size	Loading Capacity (Sheets)	Manual 2-Sided Printing
Epson Bright White Ink Jet Paper	A4	120*1	✓

*1 For manual 2-sided printing, you can load up to 30 sheets for paper with one side already printed.

Paper suitable for printing documents and Photos

Media Name	Size	Loading Capacity (Sheets)	Manual 2-Sided Printing
Epson Photo Quality Ink Jet Paper	A4	100	-
Epson Matte Paper-Heavyweight	A4	20	-

Commercially Available Paper

Plain papers

Media Name	Size	Loading Capacity (Sheets)	Manual 2-Sided Printing
Plain paper Copy paper High quality plain paper	Letter, A4, B5, 16K (195×270 mm), A5, A6, B6	150*1	✓
	Legal, Indian-Legal, 8.5×13 in.	1	✓
	User Defined (mm) 89×127 to 215.9×1200	1	✓

*1 For manual 2-sided printing, you can load up to 30 sheets for paper with one side already printed.

Envelopes

Media Name	Size	Loading Capacity (Envelopes)	Manual 2-Sided Printing
Envelope	Envelope #10, Envelope DL, Envelope C6	10	✓

Paper Handling Precautions

❏ Read the instruction sheets supplied with the paper.

❏ To achieve high-quality printouts with genuine Epson paper, use the paper in the environment stated on the sheets supplied with the paper.

❏ Fan and align the edges of the paper before loading. Do not fan or curl photo paper. Doing so may damage the printable side.

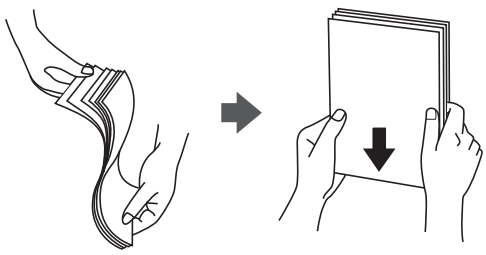

❏ If the paper is curled, flatten it or curl it slightly in the opposite direction before loading. Printing on curled paper may cause paper jams and smears on the printout.

- Do not use paper that is wavy, torn, cut, folded, damp, too thick, too thin, or paper that has stickers stuck to it. Using these types of paper causes paper jams and smears on the printout.
- Make sure you are using long-grain paper. If you are not sure what type of paper you are using, check the paper packaging or contact the manufacturer to confirm the paper specifications.

Related Information

➡ "Printer Specifications" on page 87

Loading Paper in the Paper Cassette

1. Open the front cover until it clicks, and then slide out the paper cassette until it stops.

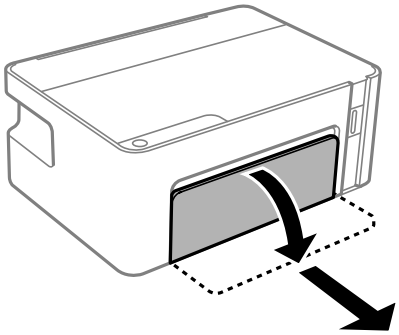

> **Important:**
> *The paper cassette cannot be removed.*

2. Slide the edge guides to their maximum position.

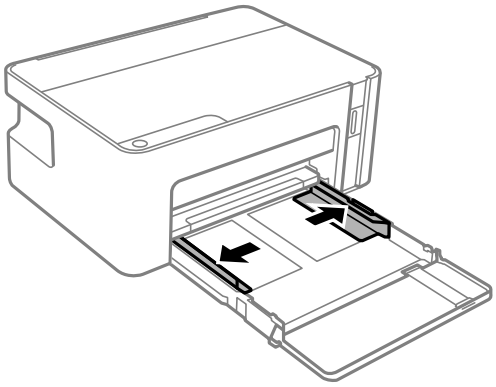

3. With the printable side facing down, load paper until it touches the back of the paper cassette.

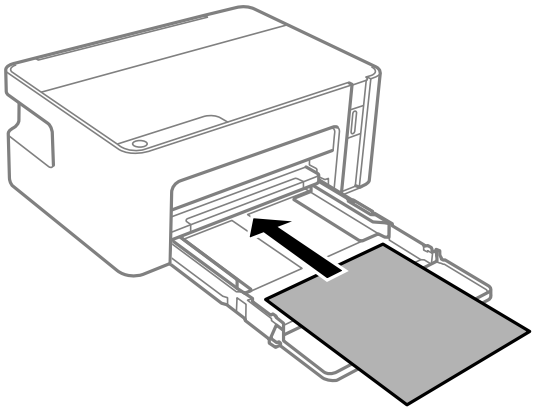

> **Important:**
> *Do not load more than the maximum number of sheets specified for the paper.*

❏ 8.5 x 13 in.

Load paper using the line.

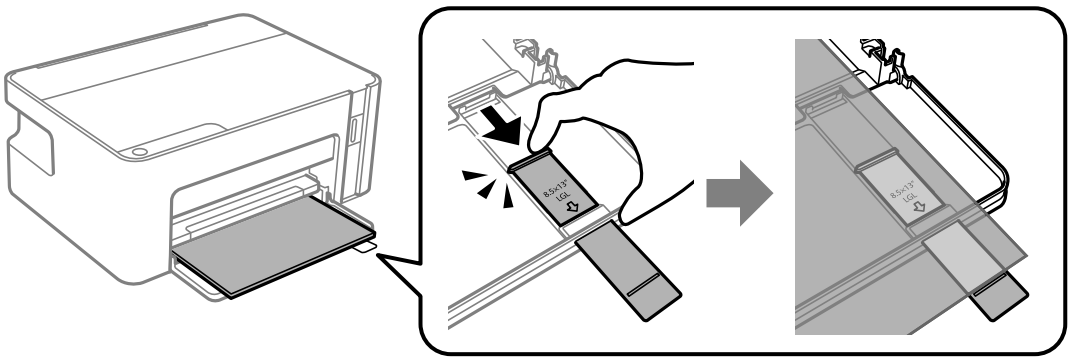

❏ Legal

Pull out the paper guide extension and load paper using the line.

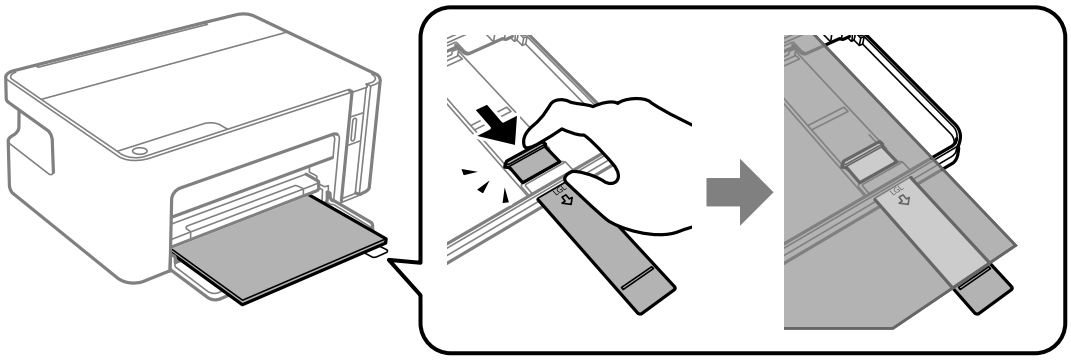

4. Slide the edge guides to the edges of the paper.

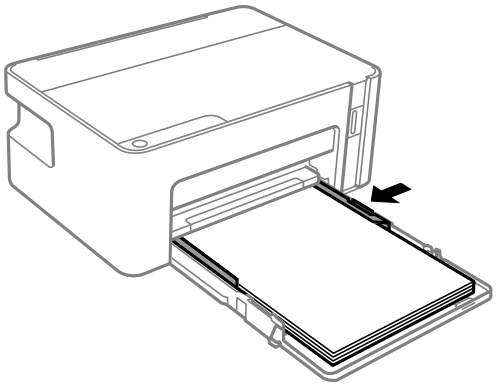

5. Insert the paper cassette as far as it will go.

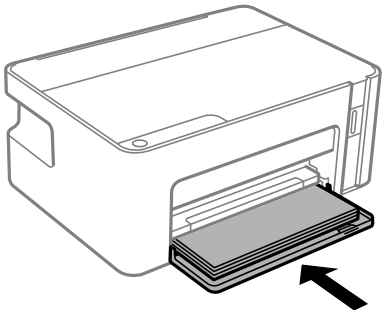

Important:

Do not push in the paper after inserting the paper cassette. It may cause a paper feed problem. If the paper is pushed in, align the paper to the paper size line.

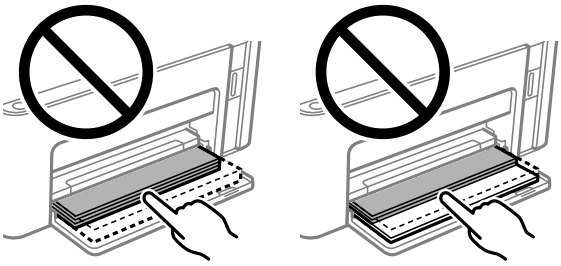

6. Slide out the output tray.

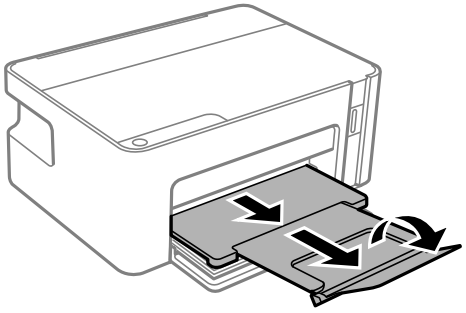

Related Information

➡ "Paper Handling Precautions" on page 15
➡ "Available Paper and Capacities" on page 14
➡ "List of Paper Type" on page 19
➡ "Loading Envelopes and Precautions" on page 19

Loading Envelopes and Precautions

Load envelopes with the flap facing up until they touch the back of the paper cassette, and then slide the edge guides to the edges of the envelopes.

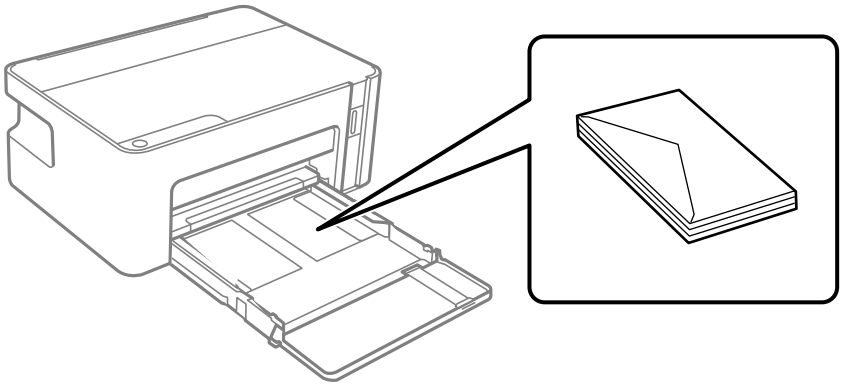

❏ Fan and align the edges of the envelopes before loading. When the stacked envelopes are puffed up with air, press them down to flatten them before loading.

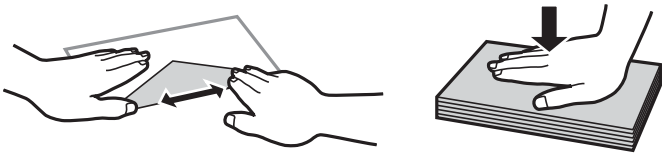

❏ Do not use envelopes that are curled or folded. Using these envelopes causes paper jams and smears on the printout.

❏ Do not use envelopes with adhesive surfaces on the flaps or window envelopes.

❏ Avoid using envelopes that are too thin, as they may curl during printing.

Related Information

➡ "Available Paper and Capacities" on page 14
➡ "Loading Paper in the Paper Cassette" on page 16

List of Paper Type

To obtain optimum printing results, select the paper type that suits the paper.

Media Name	Media Type
Epson Bright White Ink Jet Paper	Plain paper
Epson Matte Paper-Heavyweight	Epson Matte
Epson Photo Quality Ink Jet Paper	Epson Photo Quality Ink Jet

Saving Power

The printer enters sleep mode or turns off automatically if no operations are performed for a set period. You can adjust the time before power management is applied. Any increase will affect the product's energy efficiency. Please consider the environment before making any change.

Depending on the location of purchase, the printer may have a feature that turns it off automatically if it is not connected to for a specified amount of time.

https://www.epson.eu/energy-consumption

Saving Power - Windows

1. Access the printer driver window.
2. Click **Printer and Option Information** on the **Maintenance** tab.
3. Do one of the following.

   Note:
   *Your product may have the **Power Off Timer** feature or Power Off If Disconnected and **Power Off If Disconnected** features depending on the location of purchase.*

   - ❏ Select the time period before the printer enters sleep mode as the **Sleep Timer** setting, and click **Send**. To make the printer turn off automatically, select the time period as the **Power Off Timer** setting, and click **Send**.
   - ❏ Select the time period before the printer enters sleep mode as the **Sleep Timer** setting, and click **Send**. To make the printer turn off automatically, select the time period in the **Power Off If Inactive** or **Power Off If Disconnected** setting, and then click **Send**.
4. Click **OK**.

Saving Power - Mac OS

1. Select **System Preferences** from the menu > **Printers & Scanners** (or **Print & Scan**, **Print & Fax**), and then select the printer.
2. Click **Options & Supplies** > **Utility** > **Open Printer Utility**.
3. Click **Printer Settings**.

4. Do one of the following.

   Note:
   Your product may have the ***Power Off Timer*** *feature or* ***Power Off If Inactive*** *and* ***Power Off If Disconnected*** *features depending on the location of purchase.*

   ❏ Select the time period before the printer enters sleep mode as the **Sleep Timer** setting, and click **Apply**. To make the printer turn off automatically, select the time period as the **Power Off Timer** setting, and click **Apply**.

   ❏ Select the time period before the printer enters sleep mode as the **Sleep Timer** setting, and click **Apply**. To make the printer turn off automatically, select the time period in the **Power Off If Inactive** or **Power Off If Disconnected** setting, and then click **Apply**.

Printing

Printing from the Printer Driver on Windows

Accessing the Printer Driver

When accessing the printer driver from the computer's control panel, the settings are applied to all of the applications.

Accessing the printer driver from the control panel

❏ Windows 10/Windows Server 2016

Click on the start button, and then select **Windows System** > **Control Panel** > **View devices and printers** in **Hardware and Sound**. Right-click on your printer, or press and hold it and then select **Printing preferences**.

❏ Windows 8.1/Windows 8/Windows Server 2012 R2/Windows Server 2012

Select **Desktop** > **Settings** > **Control Panel** > **View devices and printers** in **Hardware and Sound**. Right-click on your printer, or press and hold it and then select **Printing preferences**.

❏ Windows 7/Windows Server 2008 R2

Click the start button, and select **Control Panel** > **View devices and printers** in **Hardware and Sound**. Right-click on your printer and select **Printing preferences**.

❏ Windows Vista/Windows Server 2008

Click the start button, and select **Control Panel** > **Printers** in **Hardware and Sound**. Right-click on your printer and select **Select printing preferences**.

❏ Windows XP/Windows Server 2003 R2/Windows Server 2003

Click the start button, and select **Control Panel** > **Printers and Other Hardware** > **Printers and Faxes**. Right-click on your printer and select **Printing preferences**.

Accessing the printer driver from the printer icon on the task bar

The printer icon on the desktop task bar is a shortcut icon allowing you to quickly access the printer driver.

If you click the printer icon and select **Printer Settings**, you can access the same printer settings window as the one displayed from the control panel. If you double-click this icon, you can check the status of the printer.

Note:
*If the printer icon is not displayed on the task bar, access the printer driver window, click **Monitoring Preferences** on the **Maintenance** tab, and then select **Register the shortcut icon to the taskbar**.*

Printing Basics

Note:
Operations may differ depending on the application. See the application's help for details.

1. Open the file you want to print.

   Load paper in the printer if it has not already been loaded.

2. Select **Print** or **Page Setup** from the **File** menu.

3. Select your printer.

4. Select **Preferences** or **Properties** to access the printer driver window.

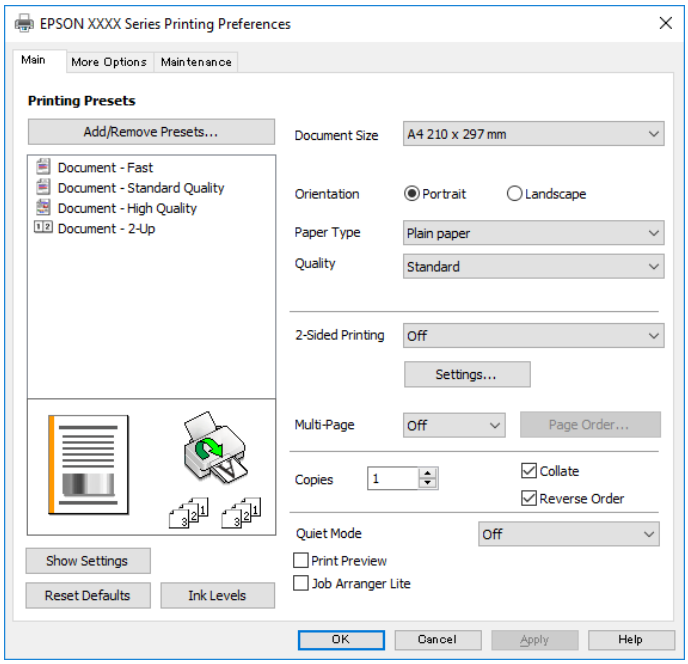

5. Change the settings as necessary.

   See the menu options for the printer driver for details.

   Note:
   - ❏ *You can also see the online help for explanations of the setting items. Right-clicking an item displays* ***Help****.*
   - ❏ *When you select* ***Print Preview****, you can see a preview of your document before printing.*

6. Click **OK** to close the printer driver window.

7. Click **Print**.

   Note:
   When you select ***Print Preview****, a preview window is displayed. To change the settings, click* ***Cancel****, and then repeat the procedure from step 2.*

Related Information

➡ "Available Paper and Capacities" on page 14

➡ "Loading Paper in the Paper Cassette" on page 16

➡ "Main Tab" on page 37

Printing on 2-Sides

You can print on both sides of the paper. You can also print a booklet that can be created by re-ordering the pages and folding the printout.

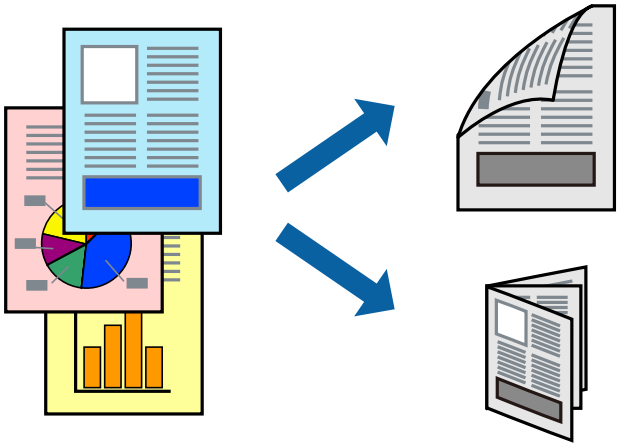

Note:

- *Flip the paper over to print on the other side when the printer has finished printing the first side.*
- *If you do not use paper that is suitable for 2-sided printing, the print quality may decline and paper jams may occur.*
- *Depending on the paper and the data, ink may bleed through to the other side of the paper.*

Related Information

➡ "Available Paper and Capacities" on page 14

Print Settings

2-sided printing is available when EPSON Status Monitor 3is enabled.

Note:
*To enable EPSON Status Monitor 3, click **Extended Settings** on the **Maintenance** tab, and then select **Enable EPSON Status Monitor 3**.*

1. On the printer driver's **Main** tab, select an option from **2-Sided Printing**.
2. Click **Settings**, make the appropriate settings, and then click **OK**.

   Note:
   *To print a folded booklet, select **Booklet**.*

3. Click **Print**.

   When the first side has finished printing, a pop-up window is displayed on the computer. Follow the on-screen instructions.

Related Information

➡ "Printing Basics" on page 22

➡ "Main Tab" on page 37

Printing Several Pages on One Sheet

You can print two or four pages of data on a single sheet of paper.

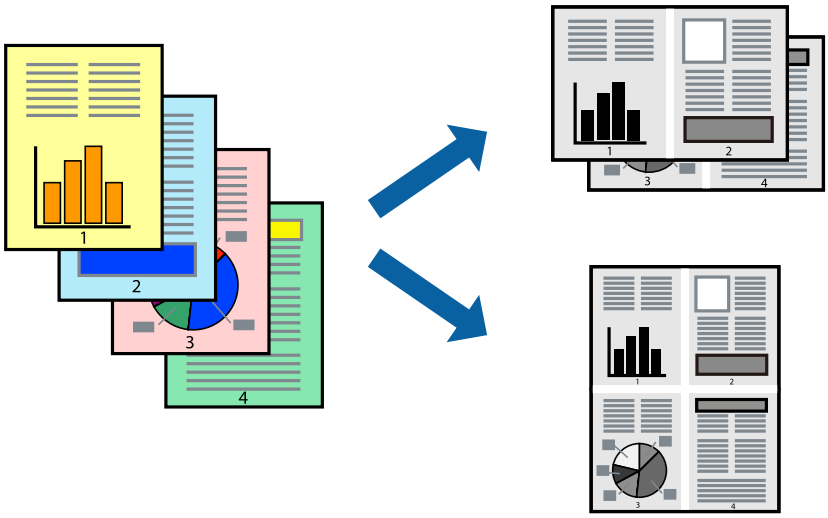

Print Settings

On the printer driver's **Main** tab, select **2-Up** or **4-Up** as the **Multi-Page** setting.

Related Information

➡ "Printing Basics" on page 22

➡ "Main Tab" on page 37

Printing and Stacking in Page Order (Reverse Order Printing)

You can print from the last page so that the documents are stacked in page order.

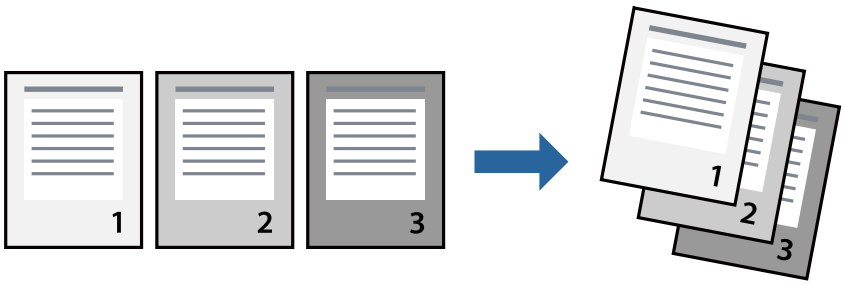

Print Settings

On the printer driver's **Main** tab, select **Reverse Order**.

Related Information

➡ "Printing Basics" on page 22

➡ “Main Tab” on page 37

Printing a Reduced or Enlarged Document

You can reduce or enlarge the size of a document by a specific percentage or to fit the paper size you loaded in the printer.

Print Settings

On the printer driver's **More Options** tab, select the document size from the **Document Size** setting. Select the paper size you want to print on from the **Output Paper** setting. Select **Reduce/Enlarge Document**, and then select **Fit to Page** or **Zoom to**. When you select **Zoom to**, enter a percentage.

Select **Center** to print the images in the center of the page.

Related Information

➡ “Printing Basics” on page 22

➡ “More Options Tab” on page 37

Printing One Image on Multiple Sheets for Enlargement (Creating a Poster)

This feature allows you to print one image on multiple sheets of paper. You can create a larger poster by taping them together.

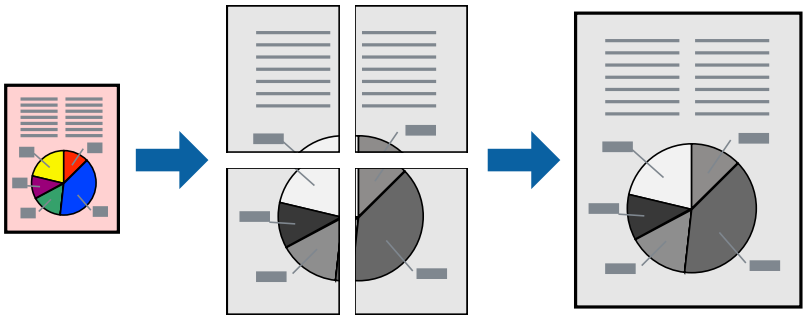

Print Settings

On the printer driver's **Main** tab, select **2x1 Poster**, **2x2 Poster**, **3x3 Poster**, or **4x4 Poster** as the **Multi-Page** setting. If you click **Settings**, you can select the panels that you do not want to print. You can also select the cutting guide options.

Related Information

➡ "Printing Basics" on page 22

➡ "Main Tab" on page 37

Making Posters Using Overlapping Alignment Marks

Here is an example of how to make a poster when **2x2 Poster** is selected, and **Overlapping Alignment Marks** is selected in **Print Cutting Guides**.

The actual guides are printed in monochrome, but for this explanation they are shown as blue and red lines.

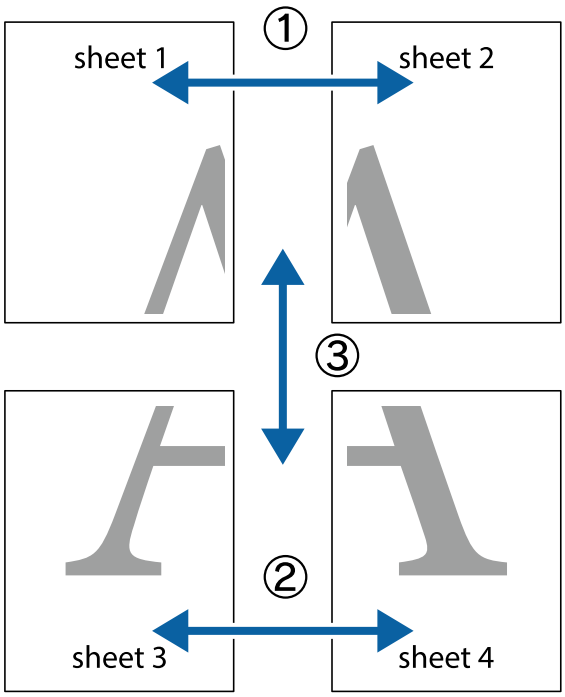

1. Prepare Sheet 1 and Sheet 2. Cut off the margins of Sheet 1 along the vertical blue line through the center of the top and bottom cross marks.

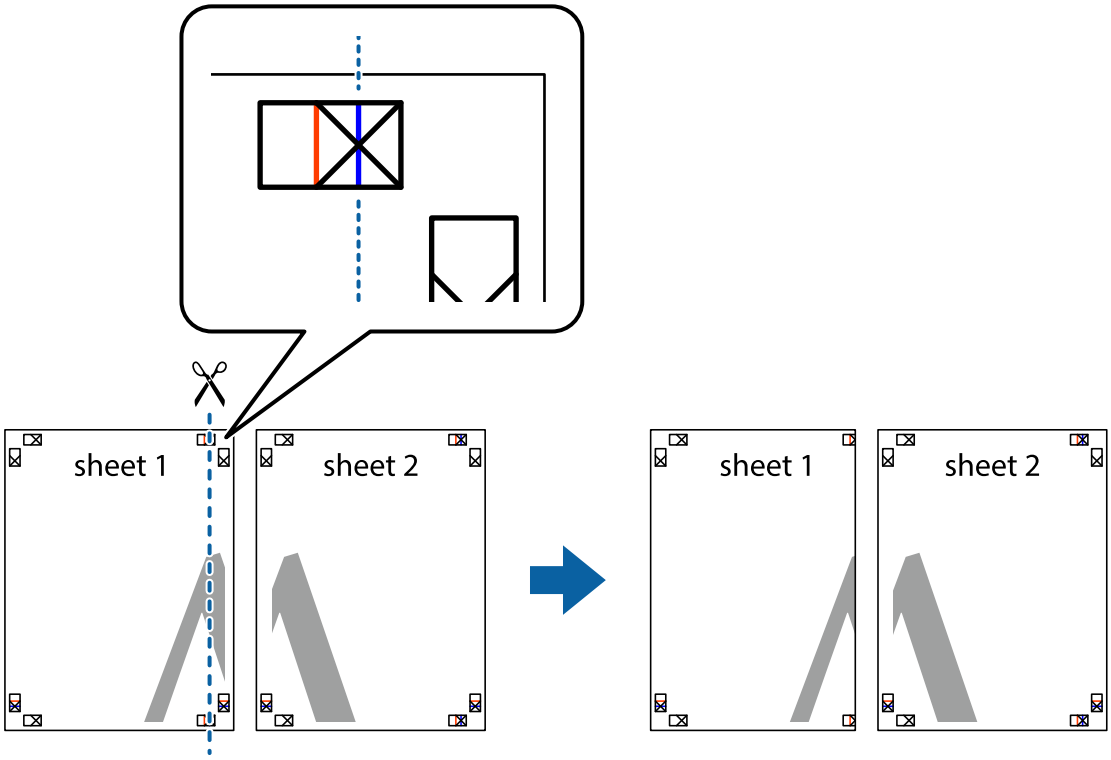

2. Place the edge of Sheet 1 on top of Sheet 2 and align the cross marks, then temporarily tape the two sheets together from the back.

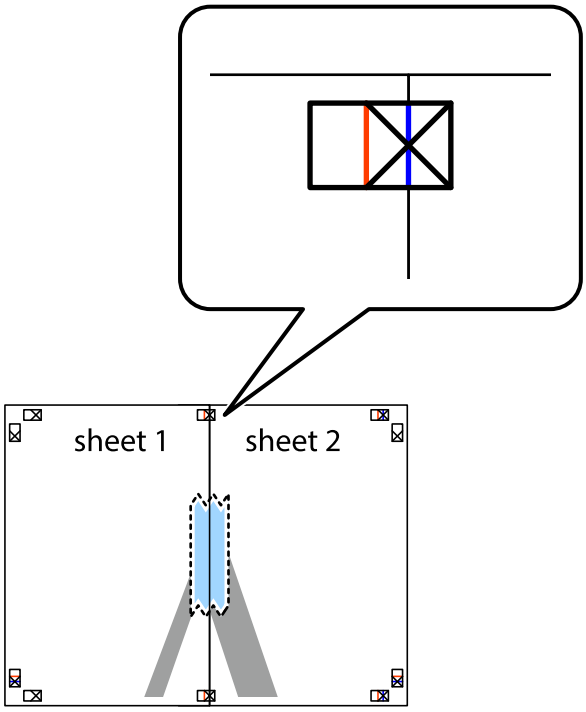

3. Cut the taped sheets in two along the vertical red line through the alignment markers (this time, the line to the left of the cross marks).

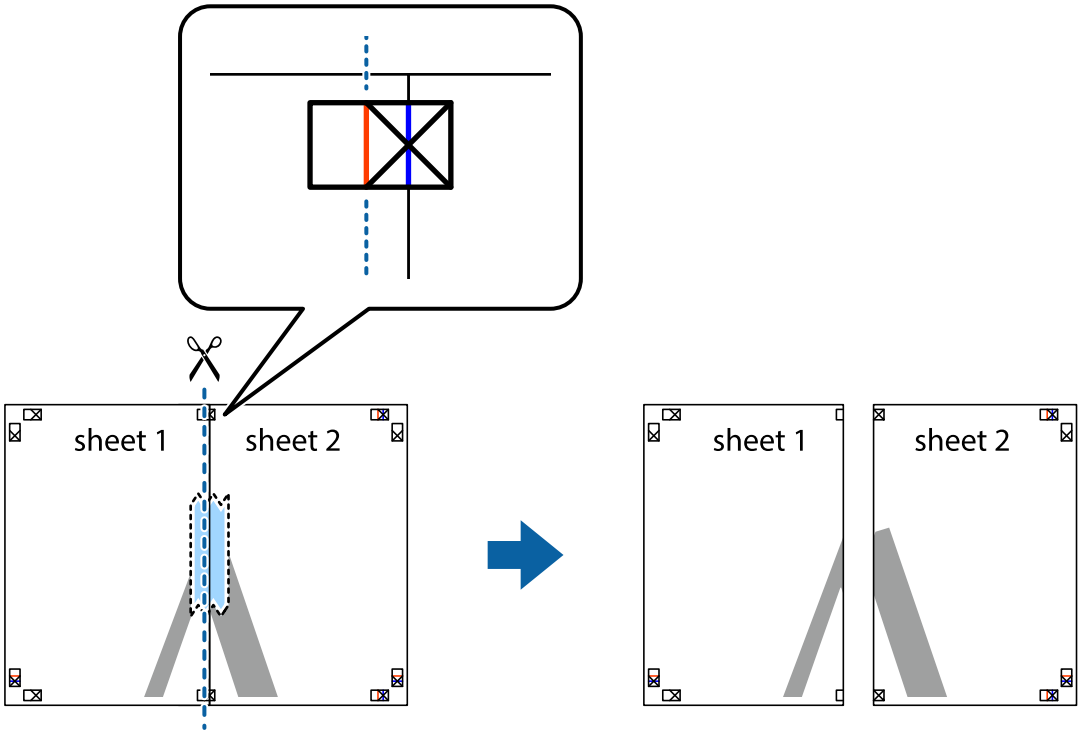

4. Tape the sheets together from the back.

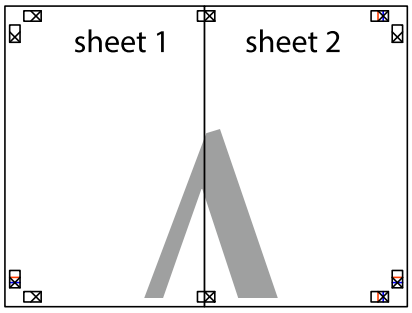

5. Repeat steps 1 to 4 to tape Sheet 3 and Sheet 4 together.

6. Cut off the margins of Sheet 1 and Sheet 2 along the horizontal blue line through the center of the left and right side cross marks.

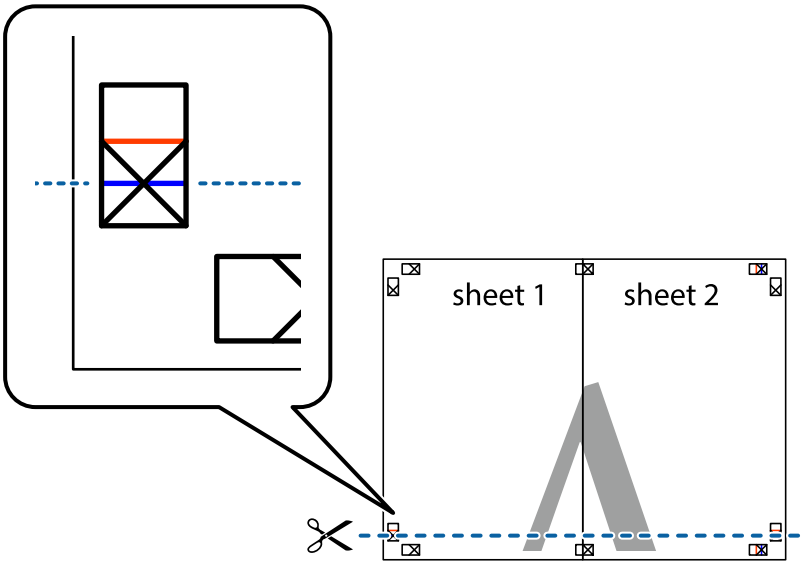

7. Place the edge of Sheet 1 and Sheet 2 on top of Sheet 3 and Sheet 4 and align the cross marks, and then temporarily tape them together from the back.

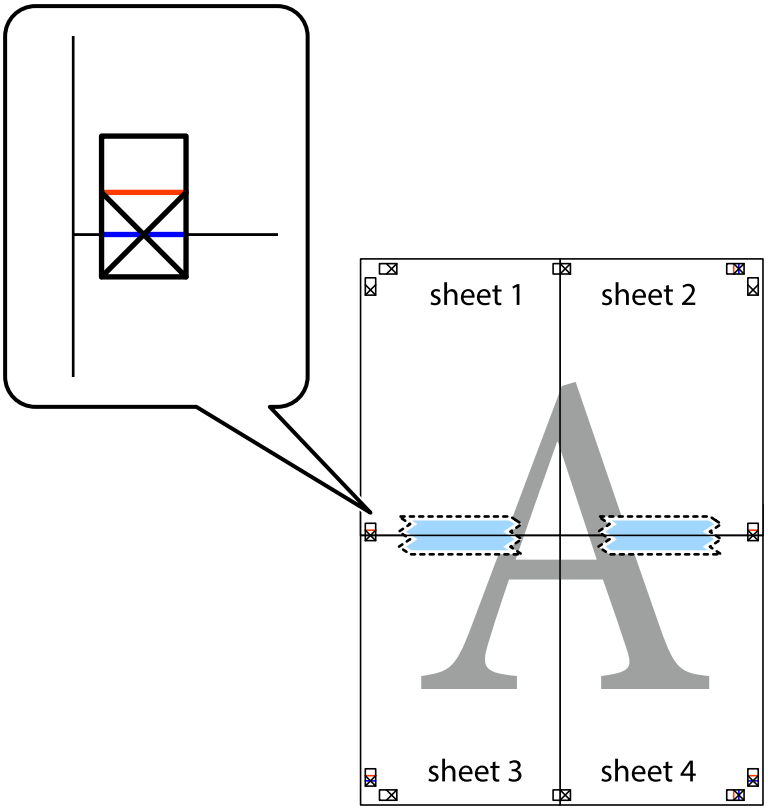

8. Cut the taped sheets in two along the horizontal red line through the alignment markers (this time, the line above the cross marks).

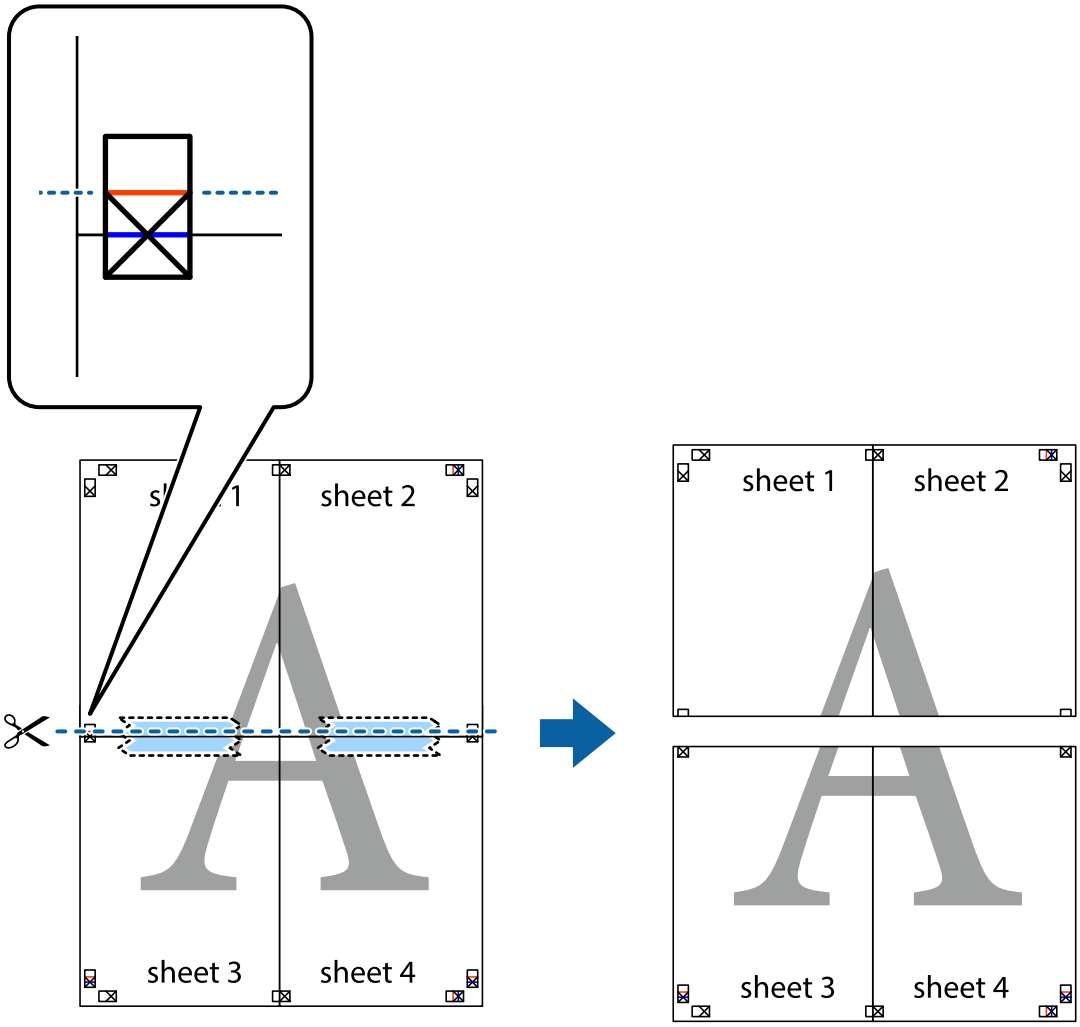

9. Tape the sheets together from the back.

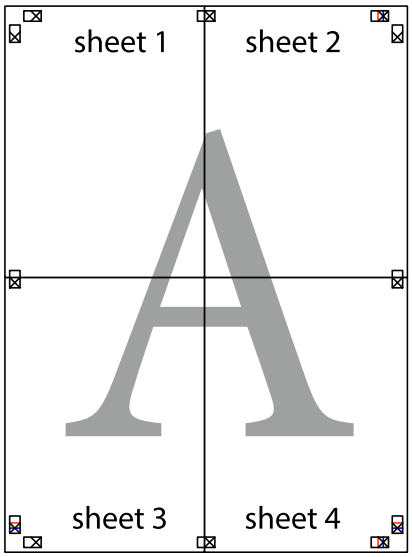

10. Cut off the remaining margins along the outer guide.

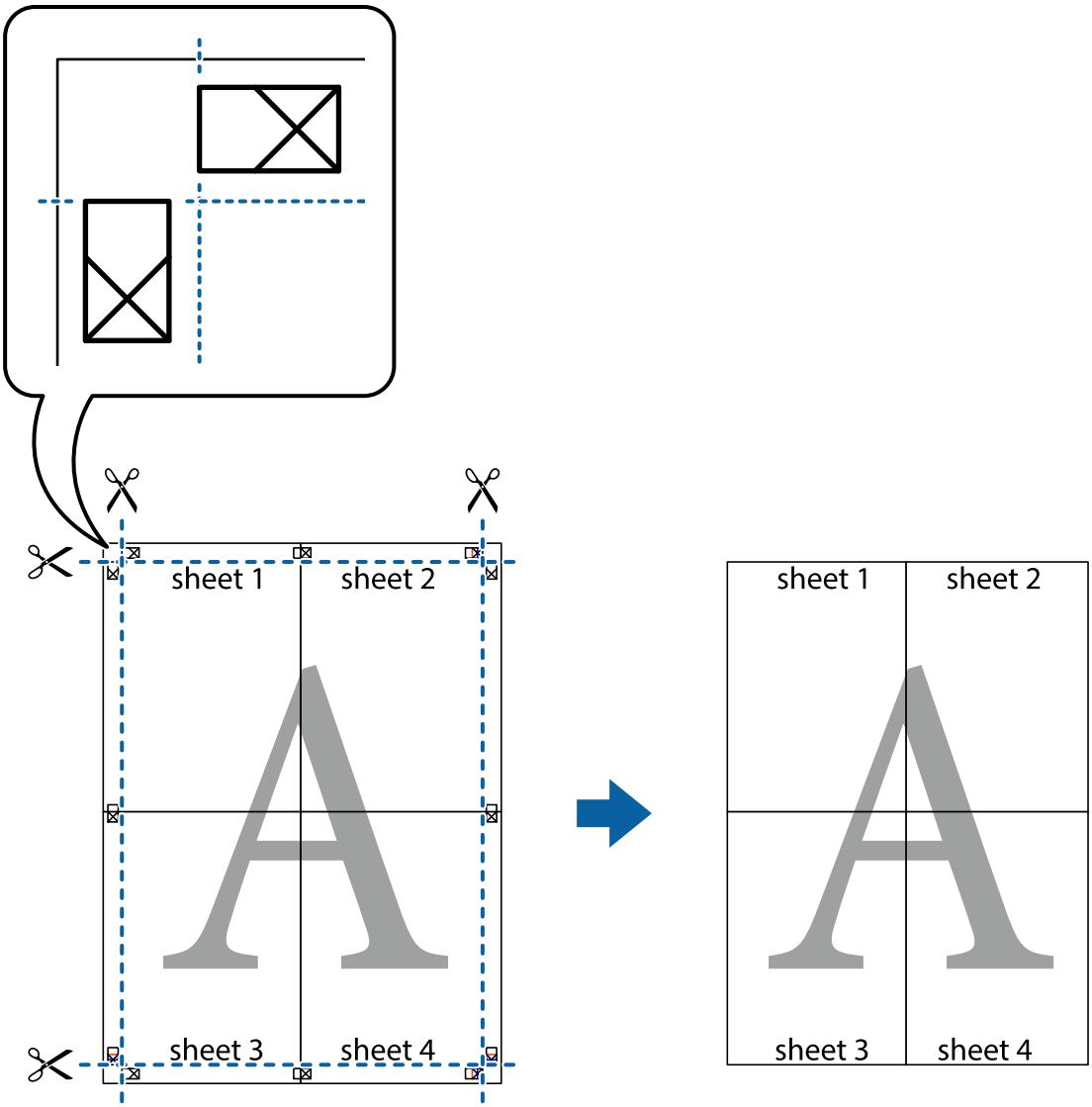

Printing with a Header and Footer

You can print information such as a user name and printing date in headers or footers.

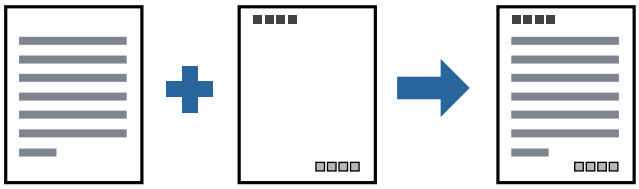

Print Settings

On the printer driver's **More Options** tab, click **Watermark Features**, and then select **Header/Footer**. Click **Settings**, and then select the items you want to print.

Related Information

➡ “Printing Basics” on page 22

➡ “More Options Tab” on page 37

Printing a Watermark

You can print a watermark such as "Confidential" on your printouts. You can also add your own watermark.

Note:
This feature is not available with borderless printing.

Print Settings

On the printer driver's **More Options** tab, click **Watermark Features**, and then select Watermark. Click **Settings** to change details such as the size, density, or position of the watermark.

Related Information

➡ “Printing Basics” on page 22

➡ “More Options Tab” on page 37

Printing Multiple Files Together

Job Arranger Lite allows you to combine several files created by different applications and print them as a single print job. You can specify the print settings for combined files, such as multi-page layout, and 2-sided printing.

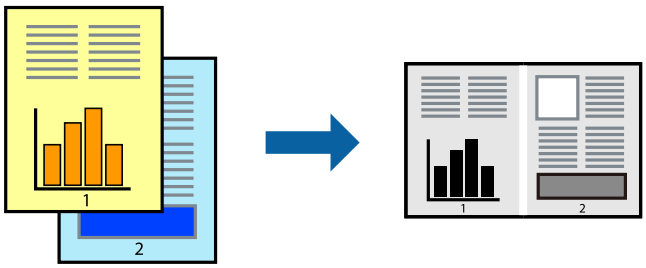

Print Settings

On the printer driver's **Main** tab, select **Job Arranger Lite**. When you start printing, the Job Arranger Lite window is displayed. With the Job Arranger Lite window opened, open the file that you want to combine with the current file, and then repeat the above steps.

When you select a print job added to Print Project in the Job Arranger Lite window, you can edit the page layout.

Click **Print** from the **File** menu to start printing.

Note:
*If you close the Job Arranger Lite window before adding all the print data to the Print Project, the print job you are currently working on is canceled. Click **Save** from the **File** menu to save the current job. The extension of the saved files is "ecl".*

*To open a Print Project, click **Job Arranger Lite** on the printer driver's **Maintenance** tab to open the Job Arranger Lite window. Next, select **Open** from the **File** menu to select the file.*

Related Information

➡ "Printing Basics" on page 22

➡ "Main Tab" on page 37

Adjusting the Print Tone

You can adjust the tone used in the print job.

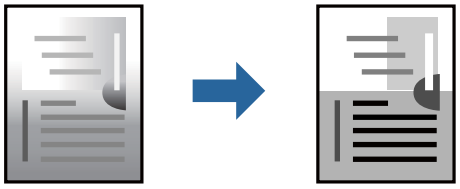

Note:
These adjustments are not applied to the original data.

Print Settings

On the printer driver's **More Options** tab, select **Custom** as the **Tone Correction** setting. Click **Advanced** to open the **Tone Correction** window, and then select the method of tone correction.

Note:
❏ ***Automatic** is selected as default on the **More Options** tab. This setting automatically adjusts the tone to match the paper type and print quality settings.*

Related Information

➡ "Printing Basics" on page 22

➡ "More Options Tab" on page 37

Printing to Emphasize Thin Lines

You can thicken thin lines that are too thin to print.

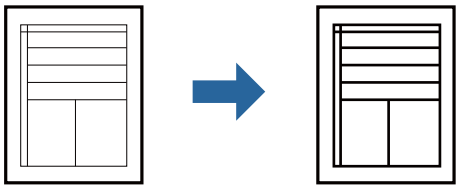

Print Settings

On the printer driver's **More Options** tab, click **Image Options** in the **Tone Correction** setting. Select **Emphasize Thin Lines**.

Related Information

➡ "Printing Basics" on page 22

➡ "More Options Tab" on page 37

Printing to Enhance Light Text and Lines

You can enhance light letters and lines to make them more visible, or to sharpen images.

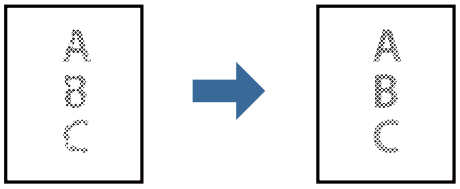

Print Settings

On the printer driver's **More Options** tab, click **Image Options** in the **Tone Correction** setting. Select **Enhance Light Text and Lines**.

Related Information

➡ "Printing Basics" on page 22

➡ "More Options Tab" on page 37

Printing Clear Bar Codes

You can print a bar code clearly and make it easy to scan. Only enable this feature if the bar code you printed cannot be scanned.

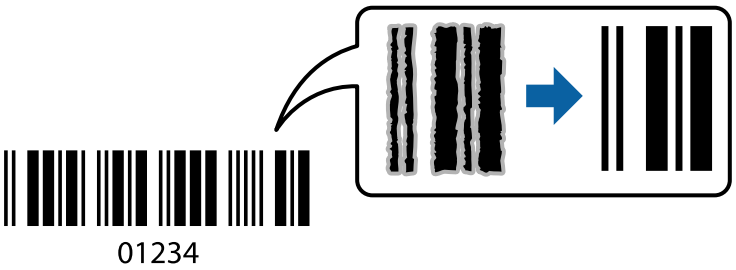

You can use this feature under the following conditions.

❏ Paper: Plain paper, Copy paper, High quality plain paper, or Envelope

❏ Quality: **Standard**

The print quality may be changed when printing. The print speed may become slower and print density may become higher.

Note:
Deblurring may not always be possible depending on the circumstances.

Print Settings

On the printer driver's **Maintenance** tab, click **Extended Settings**, and then select **Barcode mode**.

Related Information

➡ "Printing Basics" on page 22

➡ "Maintenance Tab" on page 38

Canceling Printing

You can cancel a print job from the computer. However, you cannot cancel a print job from the computer once it has been completely sent to the printer. In this case, cancel the print job by using the printer's control panel.

Canceling

On your computer, right-click on your printer in **Devices and Printers**, **Printer**, or in **Printers and Faxes**. Click **See what's printing**, right-click on the job you want to cancel, and then select **Cancel**.

Menu Options for the Printer Driver

Open the print window in an application, select the printer, and then access the printer driver window.

Note:
Menus vary depending on the option you selected.

Main Tab

Printing Presets	Add/Remove Presets	You can add or remove your own presets for frequently used print settings. Select the preset you want to use from the list.
Show Settings	Displays a list of items currently set on the **Main** and **More Options** tabs.	
Reset Defaults	Return all settings to their factory default values. The settings on the **More Options** tab are also reset to their defaults.	
Ink Levels	Displays how to check the ink level.	
Paper Source	Select the paper source from which the paper is fed. Select **Auto Select** to automatically select the paper source selected in the print settings on the printer. If the printer has only one paper source, this item is not displayed.	
Document Size	Select the paper size on which you want to print. If you select **User-Defined**, enter the paper width and height.	
Orientation	Select the orientation you want to use to print.	
Paper Type	Select the type of paper on which you print.	
Quality	Select the pint quality you want to use for printing. Available settings depend on the paper type you select.	
2-Sided Printing	Allows you to perform 2-sided printing.	
	Settings	You can specify the binding edge and the binding margins.
Multi-Page	Allows you to print several pages on one sheet or perform poster printing. Click **Page Order** to specify the order in which pages are printed.	
Copies	Set the number of copies you want to print.	
	Collate	Prints multi-page documents collated in order and sorted into sets.
	Reverse Order	Allows you to print from the last page so that the pages are stacked in the correct order after printing.
Quiet Mode	Reduces the noise the printer makes. However, enabling this may reduce print speed.	
Print Preview	Displays a preview of your document before printing.	
Job Arranger Lite	Select to print using the Job Arranger Lite feature.	

More Options Tab

Printing Presets	Add/Remove Presets	You can add or remove your own presets for frequently used print settings. Select the preset you want to use from the list.
Show Settings	Displays a list of items currently set on the **Main** and **More Options** tabs.	
Reset Defaults	Return all settings to their factory default values. The settings on the **Main** tab are also reset to their defaults.	
Document Size	Select the size of your document.	

Output Paper	Select the paper size on which you want to print. If the **Output Paper** differs from the **Document Size**, **Reduce/Enlarge Document** is selected automatically. You do not have to select it when printing without reducing or enlarging the size of a document.	
Reduce/Enlarge Document	Allows you to reduce or enlarge the size of a document.	
	Fit to Page	Automatically reduce or enlarge the document to fit to the paper size selected in **Output Paper**.
	Zoom to	Prints with a specific percentage.
	Center	Prints images in the center of the paper.
Tone Correction	Automatic	Adjusts the tone of images automatically.
	Custom	Allows you to perform manual tone correction. Click **Advanced** for further settings.
	Image Options	Enables print quality options such as Emphasize Text. You can also thicken thin lines to make them visible on the printouts.
Watermark Features	Allows you to make settings for anti-copy pattern or watermarks.	
Additional Settings	Rotate 180°	Rotates pages 180 degrees before printing. This feature is helpful when printing on paper such as envelopes that are loaded in fixed direction in the printer.
	High Speed	Prints when the print head moves in both directions. The print speed is faster, but the quality may decline.
	Mirror Image	Inverts an image to print as it would appear in a mirror.

Maintenance Tab

Nozzle Check	Prints a nozzle check pattern to check if the print head nozzles are clogged.
Head Cleaning	Cleans the clogged nozzles in the print head. Because this feature uses some ink, clean the print head only if some nozzles are clogged as shown in the illustration of the nozzle check pattern. 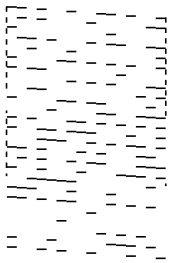

Power Cleaning	Runs power cleaning to clean the clogged nozzles in the print head. Because this feature uses more ink than head cleaning, run power cleaning only if most nozzles are clogged as shown in the illustration of the nozzle check pattern. 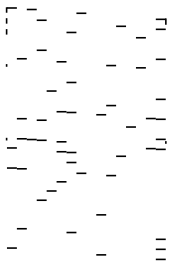
Print Head Alignment	Aligns the print head if vertical lines are misaligned.
Paper Guide Cleaning	Cleans the paper path if the printouts are smeared.
Job Arranger Lite	Opens the Job Arranger Lite window. Here you can open and edit previously saved data.
EPSON Status Monitor 3	Opens the EPSON Status Monitor 3 window. Here you can confirm the status of the printer and the consumables.
Monitoring Preferences	Allows you to make settings for items on the EPSON Status Monitor 3 window.
Extended Settings	Allows you to make a variety of settings. Right-click each item to view the Help for more details.
Print Queue	Displays the jobs waiting to be printed. You can check, pause, or resume print jobs.
Printer and Option Information	Displays the number of sheets of paper fed into the printer.
Language	Changes the language used on the printer driver window. To apply the settings, close the printer driver, and then open it again.
Software Update	Starts EPSON Software Updater to check for the latest version of applications on the Internet.
Technical Support	Allows you to access the Epson technical support website.

Printing from the Printer Driver on Mac OS

Printing Basics

Note:
Operations differ depending on the application. See the application's help for details.

1. Open the file you want to print.

   Load paper in the printer if it has not already been loaded.

2. Select **Print** from the **File** menu or another command to access the print dialog.

   If necessary, click **Show Details** or▼ to expand the print window.

3. Select your printer.

4. Select **Print Settings** from the pop-up menu.

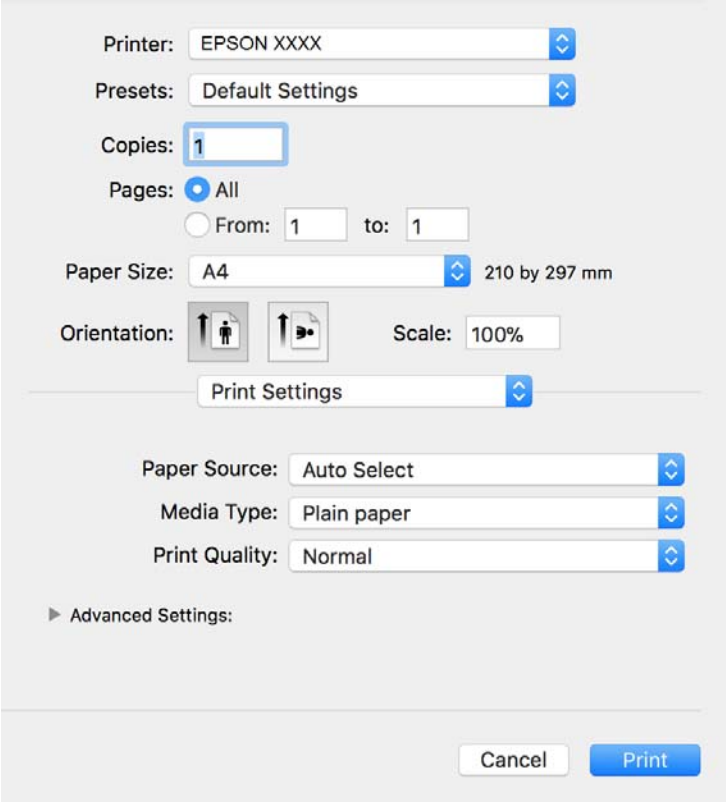

Note:
On OS X Mountain Lion or later, if the ***Print Settings*** *menu is not displayed, the Epson printer driver has not been installed correctly.*

Select ***System Preferences*** *from the* *menu >* ***Printers & Scanners*** *(or* ***Print & Scan, Print & Fax****), remove the printer, and then add the printer again. See the following to add a printer.*

http://epson.sn

5. Change the settings as necessary.

   See the menu options for the printer driver for details.

6. Click **Print**.

Related Information

➡ "Available Paper and Capacities" on page 14
➡ "Loading Paper in the Paper Cassette" on page 16
➡ "Menu Options for Print Settings" on page 44

Printing Several Pages on One Sheet

You can print two or four pages of data on a single sheet of paper.

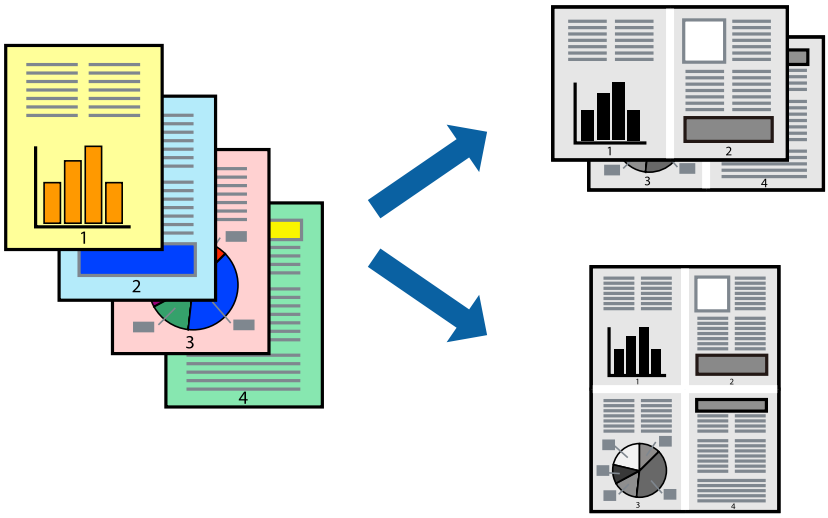

Print Settings

Select **Layout** from the pop-up menu. Set the number of pages in **Pages per Sheet**, the **Layout Direction** (page order), and **Border**.

Related Information

➡ "Printing Basics" on page 39

➡ "Menu Options for Layout" on page 43

Printing and Stacking in Page Order (Reverse Order Printing)

You can print from the last page so that the documents are stacked in page order.

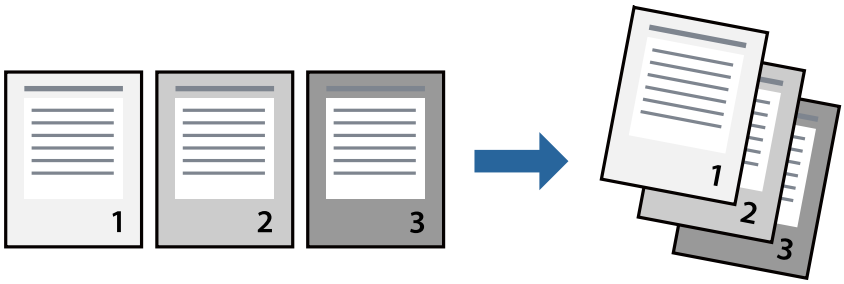

Print Settings

Select **Paper Handling** from the pop-up menu. Select **Reverse** as the **Page Order** setting.

Related Information

➡ "Printing Basics" on page 39

➡ "Menu Options for Paper Handling" on page 43

Printing a Reduced or Enlarged Document

You can reduce or enlarge the size of a document by a specific percentage or to fit the paper size you loaded in the printer.

Print Settings

When printing to fit to the paper size, select **Paper Handling** from the pop-up menu, and then select **Scale to fit paper size**. Select the paper size you loaded in the printer in **Destination Paper Size**. When reducing the size of the document, select **Scale down only**.

When printing at a specific percentage, do one of the following.

❏ Select **Print** from the **File** menu of the application. Select **Printer**, enter a percentage in **Scale**, and then click **Print**.

❏ Select **Page Setup** from the **File** menu of the application. Select your printer in **Format For**, enter a percentage in **Scale**, and then click **OK**.

Note:
*Select the paper size you set in the application as the **Paper Size** setting.*

Related Information

➡ "Printing Basics" on page 39

➡ "Menu Options for Paper Handling" on page 43

Canceling Printing

You can cancel a print job from the computer. However, you cannot cancel a print job from the computer once it has been completely sent to the printer. In this case, cancel the print job by using the printer's control panel.

Canceling

Click the printer icon in the **Dock**. Select the job you want to cancel, and then do one of the following.

❏ OS X Mountain Lion or later

Click ⊗ next to the progress meter.

❏ Mac OS X v10.6.8 to v10.7.x

Click **Delete**.

Menu Options for the Printer Driver

Open the print window in an application, select the printer, and then access the printer driver window.

Note:
Menus vary depending on the option you selected.

Menu Options for Layout

Pages per Sheet	Select the number of pages to be printed on one sheet.
Layout Direction	Specify the order in which the pages will be printed.
Border	Prints a border around the pages.
Reverse page orientation	Rotates pages 180 degrees before printing. Select this item when printing on paper such as envelopes that are loaded in fixed direction in the printer.
Flip horizontally	Inverts an image to print as it would appear in a mirror.

Menu Options for Color Matching

ColorSync	Select the method for color adjustment. These options adjusts colors between the printer and the computer display to minimize the difference in color.
EPSON Color Controls	

Menu Options for Paper Handling

Collate pages	Prints multi-page documents collated in order and sorted into sets.	
Pages to Print	Select to print only odd pages or even pages.	
Page Order	Select to print from the top or the last page.	
Scale to fit paper size	Prints to fit to the paper size you loaded.	
	Destination Paper Size	Select the paper size to print on.
	Scale down only	Select when reducing the size of the document.

Menu Options for Cover Page

Print Cover Page	Select whether or not to print a cover page. When you want to add a back cover, select **After document**.
Cover Page Type	Select the contents of the cover page.

Menu Options for Print Settings

Paper Source	Select the paper source from which the paper is fed. If the printer has only one paper source, this item is not displayed. Selecting **Auto Select** selects the paper source that matches the paper setting on the printer automatically.
Media Type	Select the type of paper on which you print.
Print Quality	Select the pint quality you want to use for printing. The options vary depending on the paper type.
Advanced Settings	Adjusts the brightness and the contrast of images.

Making Operation Settings for the Mac OS Printer Driver

Accessing the Operation Settings Window of the Mac OS Printer Driver

Select **System Preferences** from the menu > **Printers & Scanners** (or **Print & Scan**, **Print & Fax**), and then select the printer. Click **Options & Supplies** > **Options** (or **Driver**).

Operation Settings of the Mac OS Printer Driver

- Skip Blank Page: Avoids printing blank pages.
- Quiet Mode: Prints quietly. However, the print speed may be slower.
- High Speed Printing: Prints when the print head moves in both directions. The print speed is faster, but the quality may decline.
- Warning Notifications: Allows the printer driver to display warning notifications.
- Establish bidirectional communication: Usually, this should be set to **On**. Select **Off** when acquiring the printer information is impossible because the printer is shared with Windows computers on a network or for any other reason.

Canceling Printing - Printer Button

Press the button to cancel the print job in progress.

Refilling Ink

Checking the Ink Level

To confirm the actual ink remaining, visually check the ink level in the printer's tank.

Important:

Prolonged use of the printer when the ink level is below the lower line could damage the printer.

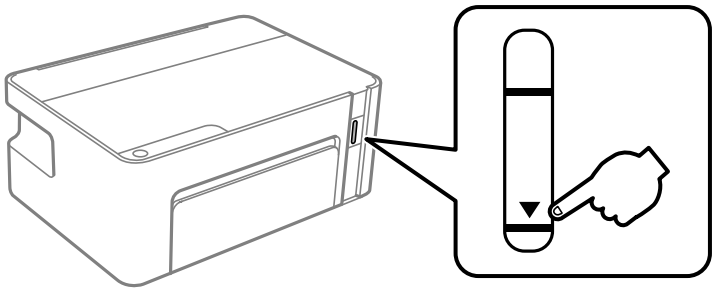

Ink Bottle Codes

Epson recommends the use of genuine Epson ink bottles.

The following are the codes for genuine Epson ink bottles.

Important:

- *Epson warranty does not cover damage caused by inks other than those specified, including any genuine Epson ink not designed for this printer or any third party ink.*
- *Other products not manufactured by Epson may cause damage that is not covered by Epson's warranties, and under certain circumstances, may cause erratic printer behavior.*

Note:

- *Ink bottle codes may vary by location. For the correct codes in your area, contact Epson support.*
- *Although the ink bottles may contain recycled materials, this does not affect printer function or performance.*
- *Specifications and appearance of the ink bottle are subject to change without prior notice for improvement.*

For Europe

Product	BK: Black
ET-M1100	111
M1100	110 *1 110S*2

*1 High capacity

*2 Standard capacity

Note:
For users in Europe, visit the following website for information on Epson's ink bottle yields.

http://www.epson.eu/pageyield

For Australia and New Zealand

BK: Black
532

For Asian countries except for China

BK: Black
005*1 005S *2

*1 High capacity

*2 Standard capacity

Related Information

➡ "Technical Support Web Site" on page 94

Ink Bottle Handling Precautions

Storing precautions for ink

- ❏ Store ink bottles at normal room temperature and keep them away from direct sunlight.
- ❏ Epson recommends using the ink bottle before the date printed on the package.
- ❏ When storing or transporting an ink bottle, do not tilt the bottle and do not subject it to impacts or temperature changes. Otherwise, ink may leak even if the cap on the ink bottle is tightened securely. Be sure to keep the ink bottle upright when tightening the cap, and take precautions to prevent ink from leaking when transporting the bottle, for example, putting the bottle in a bag.
- ❏ After bringing an ink bottle inside from a cold storage site, allow it to warm up at room temperature for at least three hours before using it.
- ❏ Do not open the ink bottle package until you are ready to fill the ink tank. The ink bottle is vacuum packed to maintain its reliability. If you leave an ink bottle unpacked for a long time before using it, normal printing may not be possible.
- ❏ Once you open an ink bottle, we recommend using it as soon as possible.
- ❏ For optimum print results do not maintain low ink levels for extended periods of time.

Handling precautions for refilling ink

- ❏ Use ink bottles with the correct part code for this printer.
- ❏ This printer requires careful handling of ink. Ink may splatter when the ink tank is filled or refilled with ink. If ink gets on your clothes or belongings, it may not come off.

- If the ink tank is not filled up to the lower line, refill the ink soon. Continued use of the printer when the ink level is below the lower line on the tank could damage the printer.
- To obtain optimum printing results, refill the ink tank to the upper line at least once every year.
- Do not shake too vigorously or squeeze the ink bottles.

Ink consumption

- To maintain optimum print head performance, some ink is consumed from the ink tank during maintenance operations such as print head cleaning. Ink may also be consumed when you turn the printer on.
- The ink in the ink bottle supplied with your printer is partly used during initial setup. In order to produce high quality printouts, the print head in your printer will be fully charged with ink. This one-off process consumes a quantity of ink and therefore this bottle may print fewer pages compared to subsequent ink bottles.
- Quoted yields may vary depending on the images that you are printing, the paper type that you are using, the frequency of your prints and environmental conditions such as temperature.

Refilling the Ink Tank

Ink can be refilled at any time.

> ***Important:***
> *Epson recommends the use of genuine Epson ink bottles.*

1. Open the printer cover.

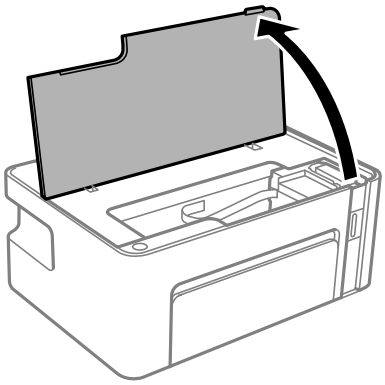

2. Hold down the button on the printer for at least five seconds until the light flashes.

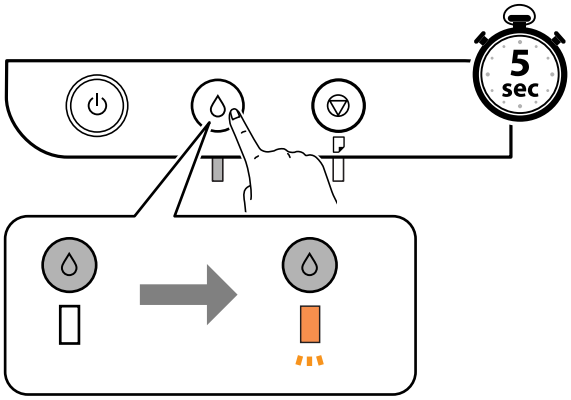

3. Check that the ink tank moves to the filling position and aligns with the ▲ mark.

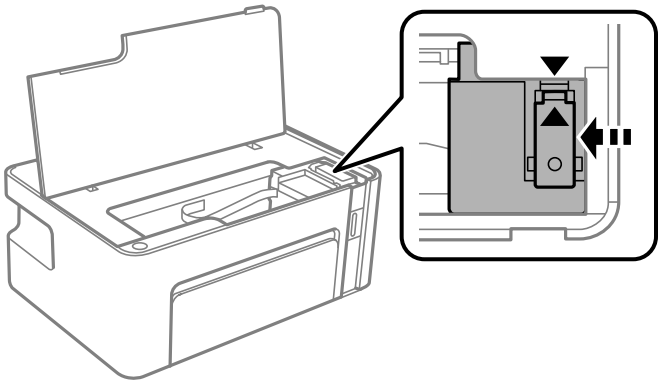

> **Important:**
> *Do not put your hand inside the printer until everything has stopped moving.*

Note:
To cancel refilling the ink tank, hold down the button on the printer for at least five seconds until the light flashes.

4. Open the ink tank cap.

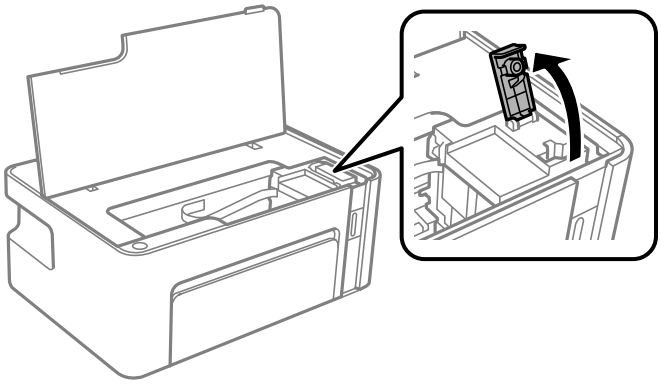

5. While holding the ink bottle upright, turn the cap slowly to remove it.

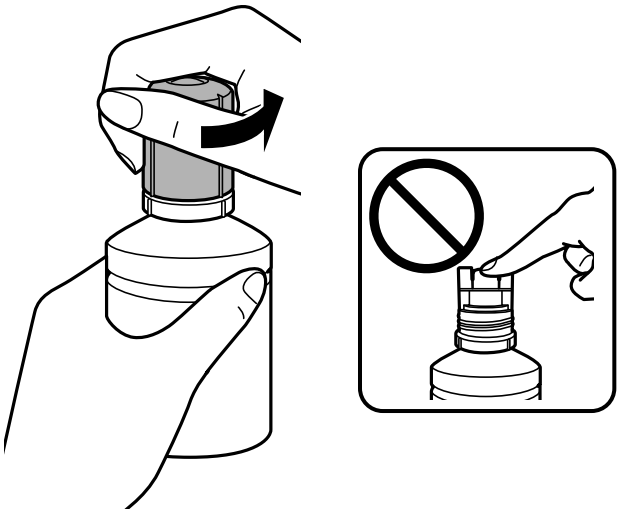

> ***Important:***
> - *Be careful not to spill any ink.*
> - *Do not touch the top of the ink bottle after removing the cap; otherwise you may be smeared with ink.*

6. Position the top of the ink bottle along the slot in front of the filling port, and then stand the bottle slowly to insert it into the filling port.

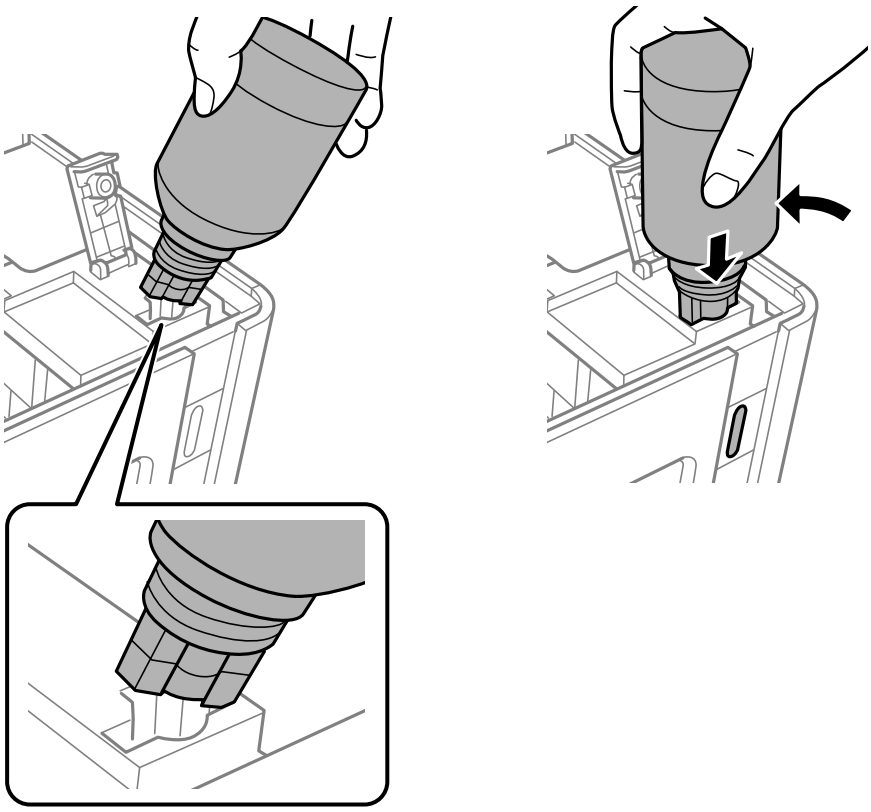

> **Important:**
> ❏ *Do not allow the top of the ink bottle to hit against any objects after removing its cap; otherwise ink may spill.*

7. Insert the top of the ink bottle securely into the filling port of the tank to refill the tank with ink.

   Ink pours into the tank just by holding the bottle normally without squeezing. The ink flow stops automatically when the ink is filled to the upper line.

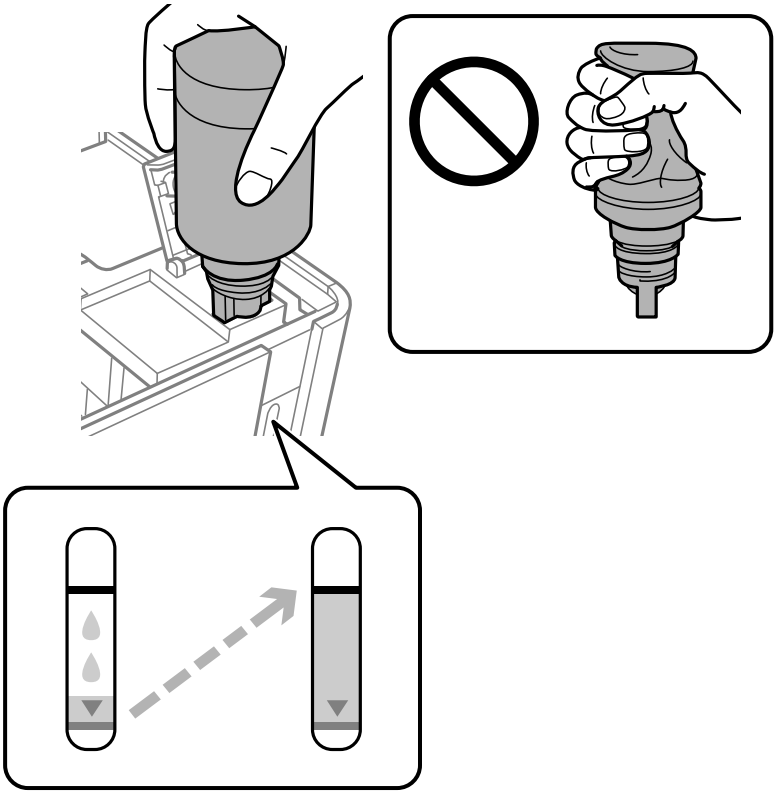

> **Important:**
> *Do not leave the ink bottle inserted; otherwise the bottle may be damaged or ink may leak.*

Note:
If the ink does not start flowing into the tank, remove the ink bottle and try reinserting it.

8. When you have finished refilling the ink, remove the ink bottle, and then close the cap of the ink tank securely.

   Note:
   If any ink remains in the ink bottle, tighten the cap and store the bottle upright for later use.

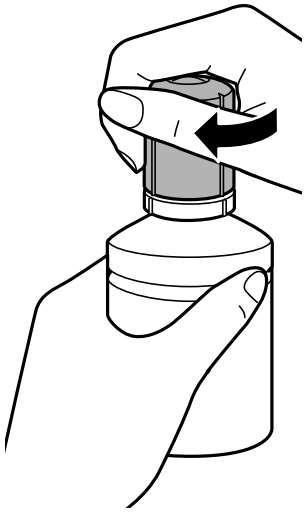

9. Close the ink tank cap.

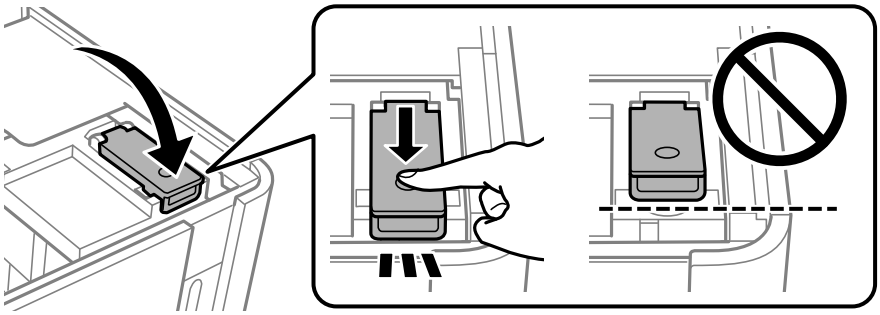

10. Close the printer cover.

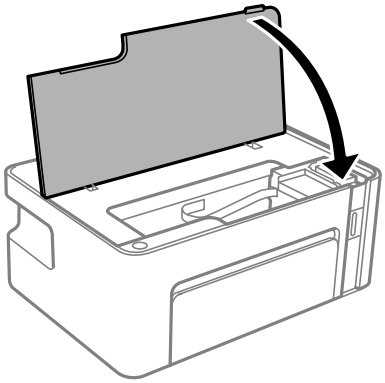

11. Hold down the button on the printer for at least five seconds until the light flashes.

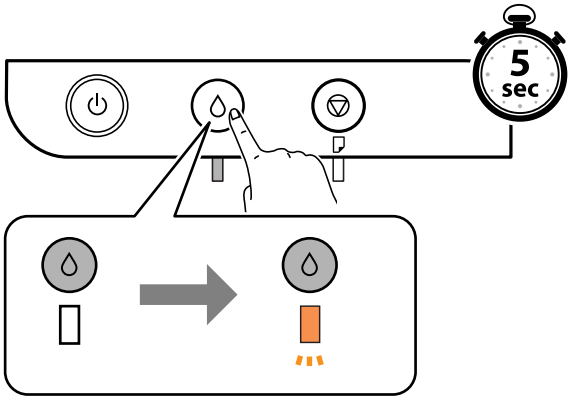

Related Information

➡ "Ink Bottle Codes" on page 45
➡ "Ink Bottle Handling Precautions" on page 46
➡ "Ink Spilled" on page 86

Maintaining the Printer

Preventing the Print Head from Drying

Always use the power button when turning the printer on and off.

Check that the power light is off before you disconnect the power cord.

The ink itself can dry out if it is not covered. Just like placing a cap on a fountain pen or an oil pen to prevent it from drying, make sure the print head is capped properly to prevent the ink from drying.

When the power cord is unplugged or a power outage occurs while the printer is in operation, the print head may not be capped properly. If the print head is left as it is, it will dry out causing nozzles (ink outlets) to clog.

In these cases, turn the printer on and off again as soon as possible to cap the print head.

Check if Nozzles are Clogged (Nozzle Check)

If the nozzles are clogged, the printouts become faint or visible banding appears.

When print quality has declined, first use the nozzle check feature to check if the nozzles are clogged.

Check if Nozzles are Clogged (Nozzle Check) - Printer Buttons

1. Load A4-size plain paper in the printer.

2. Press the ⏻ button to turn off the printer.

3. While holding down the button, press the ⏻ button to turn on the printer for at least five seconds until the power light flashes.

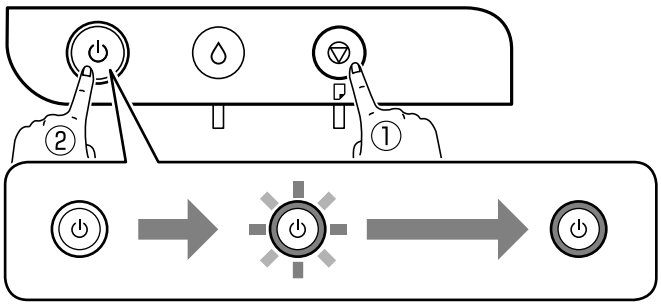

The nozzle check pattern is printed.

Note:
It may take some time to start printing the nozzle check pattern.

4. Examine the printed pattern, and then perform one of the following options depending on the print results.

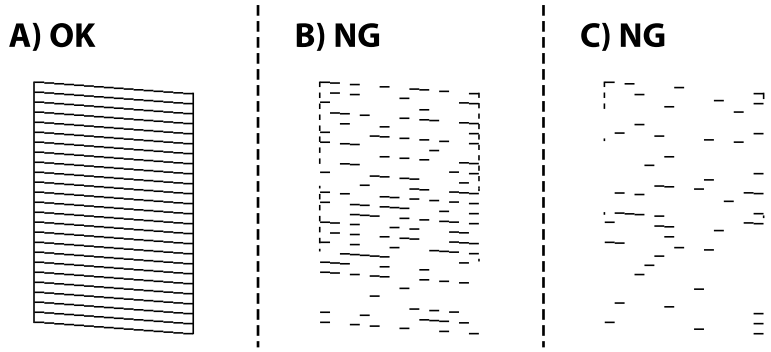

- ❏ A:

  All lines are printed. No further steps are needed.

- ❏ B or close to B: Clean the print head.

  When some nozzles are clogged, perform head cleaning. For details, see the related information below.

- ❏ C or close to C: Power Clean the print head.

  When most lines are broken or most segments are missing, perform head cleaning. For details, see the related information below.

Related Information

➡ "Loading Paper in the Paper Cassette" on page 16
➡ "Cleaning the Print Head (Head Cleaning)" on page 56
➡ "Power Cleaning the Print Head (Power Cleaning)" on page 57

Check if Nozzles are Clogged (Nozzle Check) - Windows

1. Load A4-size plain paper in the printer.
2. Access the printer driver window.
3. Click **Nozzle Check** on the **Maintenance** tab.
4. Follow the on-screen instructions to print the nozzle check pattern.
5. Examine the printed pattern, and then perform one of the following options depending on the print results.

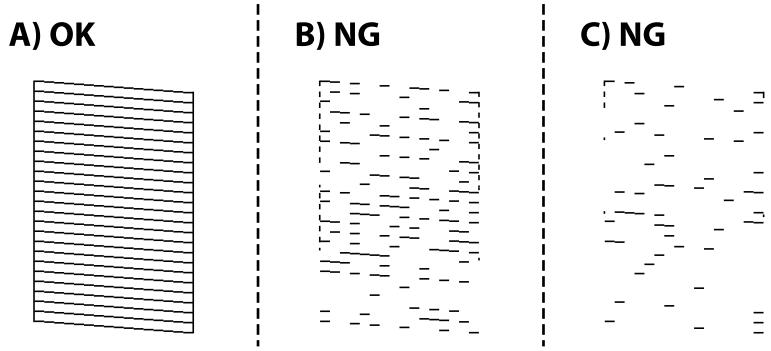

- A:

  All lines are printed. No further steps are needed.

- B or close to B: Clean the print head.

  When some nozzles are clogged, perform head cleaning. For details, see the related information below.

- C or close to C: Power Clean the print head.

  When most lines are broken or most segments are missing, perform power cleaning. For details, see the related information below.

Related Information

➡ "Accessing the Printer Driver" on page 22
➡ "Loading Paper in the Paper Cassette" on page 16
➡ "Cleaning the Print Head (Head Cleaning)" on page 56
➡ "Power Cleaning the Print Head (Power Cleaning)" on page 57

Check if Nozzles are Clogged (Nozzle Check) - Mac OS

1. Load A4-size plain paper in the printer.

2. Select **System Preferences** from the menu > **Printers & Scanners** (or **Print & Scan**, **Print & Fax**), and then select the printer.

3. Click **Options & Supplies** > **Utility** > **Open Printer Utility**.

4. Click **Nozzle Check**.

5. Follow the on-screen instructions to print the nozzle check pattern.

6. Examine the printed pattern, and then perform one of the following options depending on the print results.

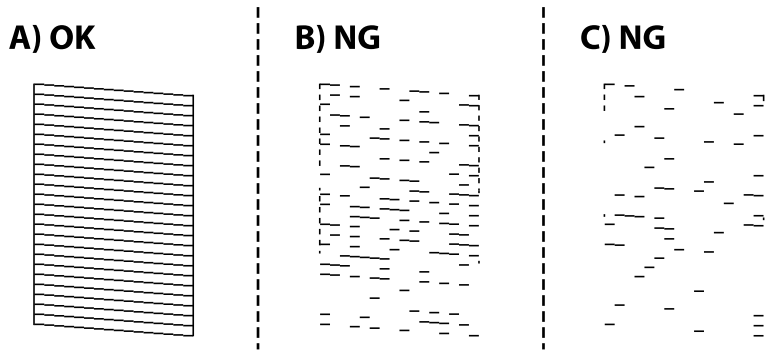

- A:

  All lines are printed. No further steps are needed.

- B or close to B: Clean the print head.

  When some nozzles are clogged, perform head cleaning. For details, see the related information below.

- C or close to C: Power Clean the print head.

  When most lines are broken or most segments are missing, perform power cleaning. For details, see the related information below.

Related Information

➡ "Loading Paper in the Paper Cassette" on page 16
➡ "Cleaning the Print Head (Head Cleaning)" on page 56
➡ "Power Cleaning the Print Head (Power Cleaning)" on page 57

Cleaning the Print Head (Head Cleaning)

When printouts are faint or visible banding appears, the nozzles are clogged. When print quality has declined, use the nozzle check feature to check if the nozzles are clogged, and then clean the print head. For details on how to run the nozzle check, see the related information below.

Important:

- *Do not open the printer cover or turn off the printer during head cleaning. If the head cleaning is incomplete, you may not be able to print.*
- *Because print head cleaning uses some ink, clean the print head only if quality declines.*
- *When ink is low, you may not be able to clean the print head.*
- *If print quality has not improved after repeating nozzle check and head cleaning three times, wait for at least six hours without printing, and then run the nozzle check again and repeat the head cleaning if necessary. We recommend to turn off the printer. If print quality has still not improved, run Power Cleaning. If it has still not improved, contact Epson support.*
- *To prevent the print head from drying out, do not unplug the printer while the power is on.*

Related Information

➡ **"Check if Nozzles are Clogged (Nozzle Check)"** on page 53

Cleaning the Print Head - Printer Buttons

Hold the button down for at least five seconds until the power light starts flashing.

Print head cleaning starts.

Note:
It may take some time to start print head cleaning.

After the power light stops flashing, turn off the printer, run nozzle check, and then check if the print head nozzles have been un-clogged.

For details on how to run the nozzle check, see the related information below.

Repeat the nozzle check and head cleaning up to three times until all lines are printed correctly.

Related Information

➡ **"Check if Nozzles are Clogged (Nozzle Check)"** on page 53

Cleaning the Print Head - Windows

1. Access the printer driver window.
2. Click **Head Cleaning** on the **Maintenance** tab.
3. Follow the on-screen instructions.

After the print head cleaning is finished, run **Nozzle Check** and then check if the print head nozzles have been unclogged. For details on how to run the nozzle check, see the related information below.

Repeat the steps up to three times until all lines are printed correctly.

Related Information

➡ "Accessing the Printer Driver" on page 22

➡ **"Check if Nozzles are Clogged (Nozzle Check)"** on page 53

Cleaning the Print Head - Mac OS

1. Select **System Preferences** from the menu > **Printers & Scanners** (or **Print & Scan**, **Print & Fax**), and then select the printer.
2. Click **Options & Supplies** > **Utility** > **Open Printer Utility**.
3. Click **Head Cleaning**.
4. Follow the on-screen instructions.

After the print head cleaning is finished, run **Nozzle Check** and then check if the print head nozzles have been unclogged. For details on how to run the nozzle check, see the related information below.

Repeat the steps up to three times until all lines are printed correctly.

Related Information

➡ **"Check if Nozzles are Clogged (Nozzle Check)"** on page 53

Power Cleaning the Print Head (Power Cleaning)

The power cleaning feature may improve print quality in the following cases.

- ❏ The most nozzles are clogged.
- ❏ You performed the nozzle check and head cleaning three times and then waited for at least six hours without printing, but print quality still did not improve.

Before running this feature, use the nozzle check feature to check if the nozzles are clogged, read the following instructions, and then power clean the print head.

> **Important:**
> *Make sure that there is enough ink in the ink tank.*
> *Visually check the ink tank is at least a third full. Low ink levels during Power Cleaning could damage the product.*

> **Important:**
> *An interval of 12 hours is required between each Power Cleaning.*
> *Normally, a single Power Cleaning should resolve the print quality issue within 12 hours. Therefore, to avoid unnecessary ink usage, you must wait 12 hours before you try it again.*

> **Important:**
> *This feature effects the service life of the ink pads. The ink pads reach their capacity earlier by running this feature. If the ink pads have reached the end of their service life, contact Epson Support to request replacement.*

Note:
When the ink levels are insufficient for Power Cleaning, you cannot run this feature. Even in this case, the levels for printing may remain.

Related Information

➡ **"Check if Nozzles are Clogged (Nozzle Check)"** on page 53

Running Power Cleaning - Windows

1. Access the printer driver window.
2. Click **Power Cleaning** on the **Maintenance** tab.
3. Follow the on-screen instructions.

Related Information

➡ "Accessing the Printer Driver" on page 22
➡ **"Check if Nozzles are Clogged (Nozzle Check)"** on page 53

Running Power Cleaning - Mac OS

1. Select **System Preferences** from the menu > **Printers & Scanners** (or **Print & Scan**, **Print & Fax**), and then select the printer.
2. Click **Options & Supplies** > **Utility** > **Open Printer Utility**.
3. Click **Power Cleaning**.
4. Follow the on-screen instructions.

Related Information

➡ "Check if Nozzles are Clogged (Nozzle Check)" on page 53

Aligning the Print Head

If you notice a misalignment of vertical lines or blurred images, align the print head.

Aligning the Print Head - Windows

1. Load four or more sheets of A4-size plain paper in the printer.
2. Access the printer driver window.
3. Click **Print Head Alignment** on the **Maintenance** tab.
4. Follow the on-screen instructions.

Related Information

➡ "Loading Paper in the Paper Cassette" on page 16
➡ "Accessing the Printer Driver" on page 22

Aligning the Print Head - Mac OS

1. Load four or more sheets of A4-size plain paper in the printer.
2. Select **System Preferences** from the menu > **Printers & Scanners** (or **Print & Scan**, **Print & Fax**), and then select the printer.
3. Click **Options & Supplies** > **Utility** > **Open Printer Utility**.
4. Click **Print Head Alignment**.
5. Follow the on-screen instructions.

Related Information

➡ "Loading Paper in the Paper Cassette" on page 16

Cleaning the Paper Path

When the printouts are smeared or scuffed or paper does not feed correctly, clean the roller inside.

> ***Important:***
> *Do not use tissue paper to clean the inside of the printer. The print head nozzles may be clogged with lint.*

Cleaning the Paper Path - Windows

1. Access the printer driver window.
2. Click **Paper Guide Cleaning** on the **Maintenance** tab.
3. Follow the on-screen instructions.

Cleaning the Paper Path - Mac OS X

1. Select **System Preferences** from the menu > **Printers & Scanners** (or **Print & Scan**, **Print & Fax**), and then select the printer.
2. Click **Options & Supplies** > **Utility** > **Open Printer Utility**.
3. Click **Paper Guide Cleaning**.
4. Follow the on-screen instructions.

Cleaning the Paper Path for Paper Feeding Problems

When paper is not fed from paper cassette correctly, clean the roller inside.

1. Turn off the printer by pressing the button.
2. Unplug the power cord, and then disconnect the power cord.
3. Make sure that the cap of the ink tank is securely closed.

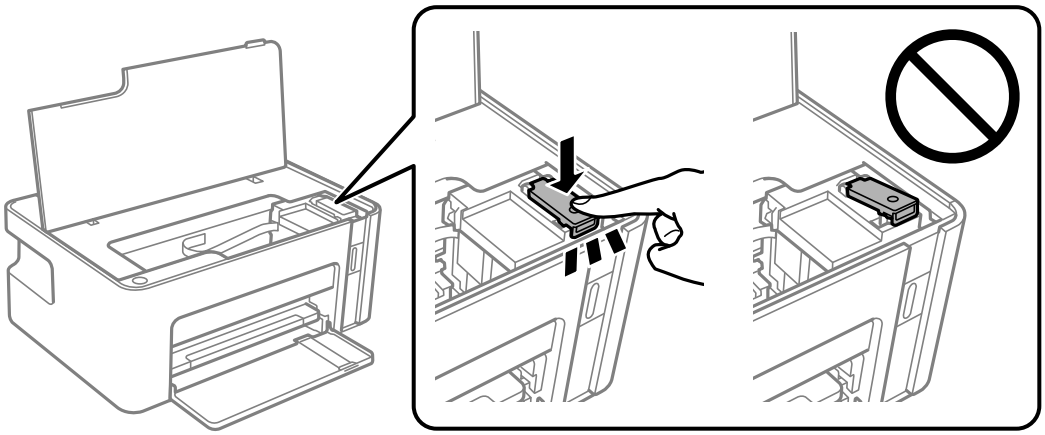

> ***Important:***
> *If the cap of the ink tank is not securely closed, ink may leak.*

4. Close the printer cover.

5. Slide out the paper cassette, and then remove the paper.

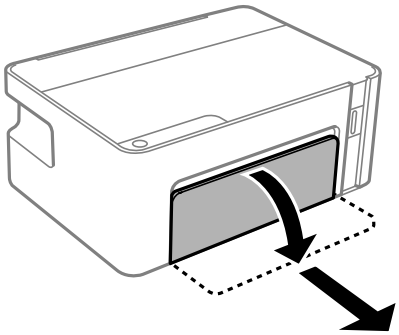

6. Stand the printer on its side with the printer's ink tank at the bottom.

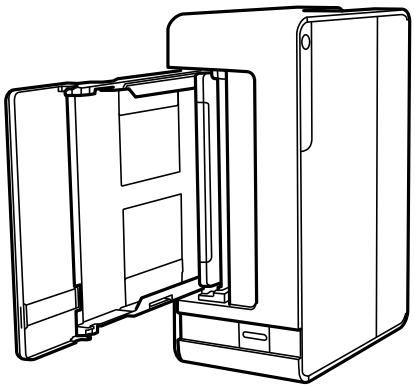

> ***Caution:***
> *Be careful not to trap your hand or fingers when standing the printer. Otherwise you may be injured.*

> ***Important:***
> *Do not leave the printer standing for a long time.*

7. Dampen a soft cloth with water, wring it out thoroughly, and then wipe the roller while rotating it with the cloth.

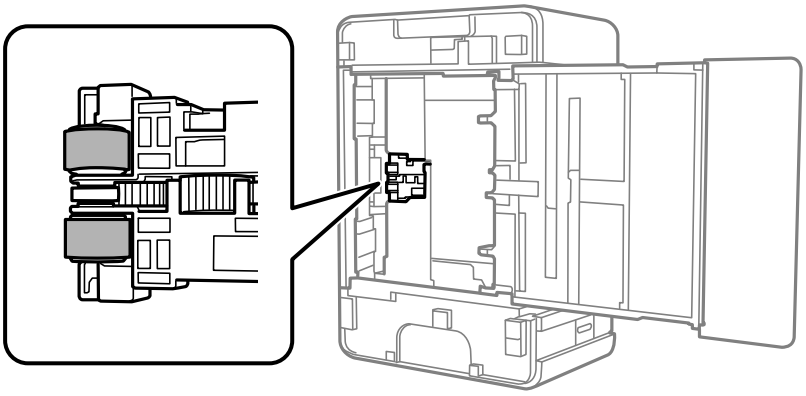

8. Return the printer to its normal position, and then insert the paper cassette.

9. Connect the power cord.

Cleaning the Translucent Film

When the printout is not improved after aligning the print head or cleaning the paper path, the translucent film inside the printer may be smeared.

Items required:

❏ Cotton swabs (several)

❏ Water with a few drops of detergent (2 to 3 drops of detergent in 1/4 cup of tap water)

❏ Light for checking smears

> ***Important:***
> *Do not use cleaning liquid other than water with a few drops of detergent.*

1. Turn off the printer by pressing the ⏻ button.

2. Open the printer cover.

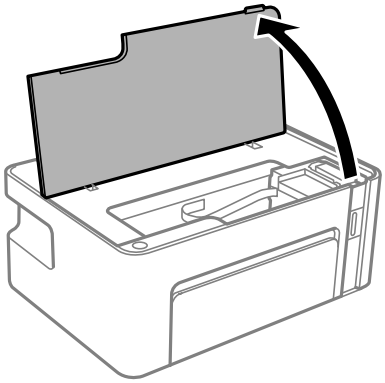

3. Check if the translucent film is smeared. Smears are easier to see if you use a light.

   If there are smears (such as finger marks or grease) on the translucent film (A), go to the next step.

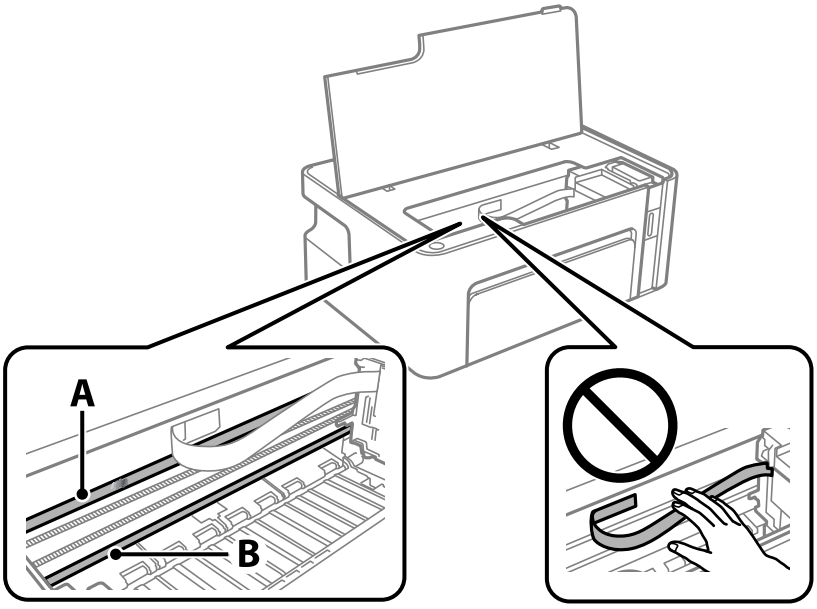

A: Translucent film

B: Rail

> ***Important:***
>
> *Be careful not to touch the rail (B). Otherwise, you may not be able to print. Do not wipe off the grease on the rail, because this is necessary for operations.*

4. Moisten a cotton swab with the water with a few drops of detergent so that it is not dripping water, and then wipe the smeared part.

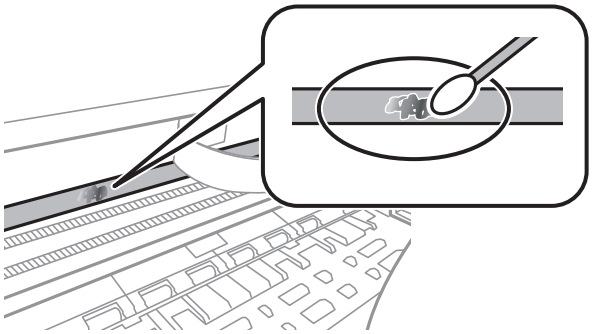

> ***Important:***
>
> *Wipe off the smear gently. If you press the cotton swab too hard to the film, the springs of the film may be dislocated and the printer may be damaged.*

5. Use a new dry cotton swab to wipe the film.

> **Important:**
> *Do not leave any fibers on the film.*

Note:
To prevent the smear from spreading, frequently replace the cotton swab with a new one.

6. Repeat steps 4 and 5 until the film is not smeared.

7. Visually check that the film is not smeared.

Checking the Total Number of Pages Fed Through the Printer

You can check the total number of pages fed through the printer.

Checking the Total Number of Pages Fed Through the Printer - Printer Buttons

The information is printed together with the nozzle check pattern.

1. Load A4-size plain paper in the printer.

2. Press the ⏻ button to turn off the printer.

3. Turn the printer on while holding the button down, and then release the buttons when the power light flashes.

Checking the Total Number of Pages Fed Through the Printer - Windows

1. Access the printer driver window.

2. Click **Printer and Option Information** on the **Maintenance** tab.

Related Information

➡ "Accessing the Printer Driver" on page 22

Checking the Total Number of Pages Fed Through the Printer - Mac OS

1. Select **System Preferences** from the menu > **Printers & Scanners** (or **Print & Scan**, **Print & Fax**), and then select the printer.

2. Click **Options & Supplies** > **Utility** > **Open Printer Utility**.

3. Click **Printer and Option Information**.

Software Information

This section introduces software products available for your printer from the supplied CD.

Application for Printing Web Pages (E-Web Print)

E-Web Print is an application that allows you to easily print web pages with various layouts. See the application's help for details. You can access the help from the **E-Web Print** menu on the **E-Web Print** tool bar.

Note:

- *Windows Server operating systems are not supported.*
- *Mac OS is not supported.*
- *Check for supported browsers and the latest version from the download site.*

Starting

When you install E-Web Print, it is displayed in your browser. Click **Print** or **Clip**.

Related Information

➡ "Installing Applications" on page 67

Software Update Tools (EPSON Software Updater)

EPSON Software Updater is an application that checks for new or updated software on the internet and installs it. You can also update the printer's firmware and manual.

Note:
Windows Server operating systems are not supported.

Installing Method

Download EPSON Software Updater from the Epson website.

If you are using a Windows computer and cannot to download it from the website, you can install it from the supplied software disc.

http://www.epson.com

Starting on Windows

- Windows 10

  Click the start button, and then select **Epson Software** > **EPSON Software Updater**.

- Windows 8.1/Windows 8

  Enter the application name in the search charm, and then select the displayed icon.

- Windows 7/Windows Vista/Windows XP

  Click the start button, and then select **All Programs** or **Programs** > **Epson Software** > **EPSON Software Updater**.

Note:
You can also start EPSON Software Updater by clicking the printer icon on the task bar on the desktop, and then selecting ***Software Update****.*

Starting on Mac OS

Select **Go** > **Applications** > **Epson Software** > **EPSON Software Updater**.

Installing Applications

Connect your computer to the network and install the latest version of applications from the website.

Note:
❏ *Log on to your computer as an administrator. Enter the administrator password if the computer prompts you.*

❏ *When reinstalling an application, you need to uninstall it first.*

1. Quit all running applications.

2. When installing the printer driver, disconnect the printer and the computer temporarily.

   Note:
   Do not connect the printer and the computer until you are instructed to do so.

3. Access to the following website, and then enter the product name.

   http://epson.sn

4. Select **Setup**, and then click **Download**.

5. Click or double-click the downloaded file, and then follow the on-screen instructions.

Note:
If you are using a Windows computer and you cannot download applications from the website, install them from the software disc that came with the printer.

Updating Applications and Firmware

You may be able to clear certain problems and improve or add functions by updating the applications and the firmware. Make sure you use the latest version of the applications and firmware.

1. Make sure that the printer and the computer are connected, and the computer is connected to the internet.

2. Start EPSON Software Updater, and update the applications or the firmware.

   Important:
   Do not turn off the computer or the printer until the update is complete; otherwise, the printer may malfunction.

   Note:
   If you cannot find the application you want to update in the list, you cannot update using the EPSON Software Updater. Check for the latest versions of the applications from your local Epson website.

   http://www.epson.com

Uninstalling Applications

Log in to your computer as an administrator. Enter the administrator password if the computer prompts you.

Uninstalling Applications - Windows

1. Press the ⏻ button to turn off the printer.
2. Quit all running applications.
3. Open **Control Panel**:
   - ❏ Windows 10/Windows Server 2016

     Click on the start button, and then select **Windows System** > **Control Panel**.
   - ❏ Windows 8.1/Windows 8/Windows Server 2012 R2/Windows Server 2012

     Select **Desktop** > **Settings** > **Control Panel**.
   - ❏ Windows 7/Windows Vista/Windows XP/Windows Server 2008 R2/Windows Server 2008/Windows Server 2003 R2/Windows Server 2003

     Click the start button and select **Control Panel**.
4. Open **Uninstall a program** (or **Add or Remove Programs**):
   - ❏ Windows 10/Windows 8.1/Windows 8/Windows 7/Windows Vista/Windows Server 2016/Windows Server 2012 R2/Windows Server 2012/Windows Server 2008 R2/Windows Server 2008

     Select **Uninstall a program** in **Programs**.
   - ❏ Windows XP/Windows Server 2003 R2/Windows Server 2003

     Click **Add or Remove Programs**.
5. Select the application you want to uninstall.

   You cannot uninstall the printer driver if there is any print jobs. Delete or wait to be printed the jobs before uninstalling.
6. Uninstall the applications:
   - ❏ Windows 10/Windows 8.1/Windows 8/Windows 7/Windows Vista/Windows Server 2016/Windows Server 2012 R2/Windows Server 2012/Windows Server 2008 R2/Windows Server 2008

     Click **Uninstall/Change** or **Uninstall**.
   - ❏ Windows XP/Windows Server 2003 R2/Windows Server 2003

     Click **Change/Remove** or **Remove**.

   Note:
   *If the **User Account Control** window is displayed, click **Continue**.*
7. Follow the on-screen instructions.

Uninstalling Applications - Mac OS

1. Download the Uninstaller using EPSON Software Updater.

   Once you have downloaded the Uninstaller, you do not need to download it again each time you uninstall the application.

2. Press the ⏻ button to turn off the printer.

3. To uninstall the printer driver, select **System Preferences** from the menu > **Printers & Scanners** (or **Print & Scan**, **Print & Fax**), and then remove the printer from the enabled printers list.

4. Quit all running applications.

5. Select **Go** > **Applications** > **Epson Software** > **Uninstaller**.

6. Select the application you want to uninstall, and then click **Uninstall**.

   Important:
   The Uninstaller removes all drivers for Epson inkjet printers on the computer. If you use multiple Epson inkjet printers and you only want to delete some drivers, delete all of them first, and then install the necessary printer driver again.

   Note:
   *If you cannot find the application you want to uninstall in the application list, you cannot uninstall using the Uninstaller. In this situation, select **Go** > **Applications** > **Epson Software**, select the application you want to uninstall, and then drag it to the trash icon.*

Related Information

➡ "Software Update Tools (EPSON Software Updater)" on page 66

Solving Problems

Checking the Printer Status

Lights and Printer Status

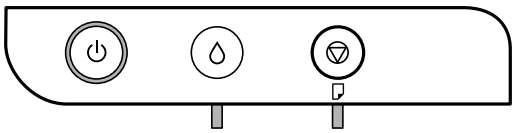

When an error occurs, the light turns on or flashes. Details of the error are displayed on the computer screen.

: On

: Flashing

Light	Situation	Solutions
	Initial ink charging may not be complete.	See the *Start Here* poster to complete initial ink charging.
	Ink refilling may not be complete.	Refill the ink inside the ink tank, and then press the button to return the tank to the home position.
	Ink tank cap is not fully closed.	Push in the cap firmly, and then press the button.
	No paper is loaded or more than one sheet has been fed at a time.	Load paper and press the button.
	A paper jam has occurred.	Remove the paper and press the button.
	Protective material may be inside the printer.	Open the printer cover, remove the protective material, and then press the button.

Light	Situation	Solutions
	When the power is on or flashing ❏ The printer was not turned off correctly.* ❏ Because the printer was turned off while operating, the nozzles may have dried and clogged. * The power was turned off with a power strip or breaker, the plug was pulled out of the outlet, or an electrical failure occurred.	❏ After clearing the error by pressing the button, we recommend performing a nozzle check. Cancel any pending print jobs. ❏ To turn off the printer, make sure you press the button.
	When the power is off The printer has started in recovery mode because the firmware update failed.	Follow the steps below to try to update the firmware again. 1. Connect the computer and the printer with a USB cable. 2. Visit your local Epson website for further instructions.
	When the light and the light flash simultaneously An ink pad is nearing or at the end of its service life.	The ink pads need to be replaced. Contact Epson or an authorised Epson service provider to replace the ink pad *1. It is not a user-serviceable part. When a message saying that you can continue printing is displayed on the computer, press the button to continue printing. The lights stop flashing for the time being, however, they will continue to flash at regular intervals until the ink pad is replaced.
	A printer error has occurred.	Open the front cover and remove any paper inside the printer. Turn the power off and on again. If the error continues to occur after turning the power off and on again, contact Epson support.

*1 In some print cycles a very small amount of surplus ink may be collected in the ink pad. To prevent ink leakage from the pad, the printer is designed to stop printing when the pad has reached its limit. Whether and how often this is required will vary according to the number of pages you print, the type of material that you print and the number of cleaning cycles that the printer performs. The need for replacement of the pad does not mean that your printer has ceased to operate in accordance with its specifications. The printer will advise you when the pad requires replacing and this can only be performed by an authorised Epson Service provider. The Epson warranty does not cover the cost of this replacement.

Related Information

➡ "Removing Jammed Paper" on page 72
➡ "Contacting Epson Support" on page 94
➡ "Installing Applications" on page 67

Checking the Printer Status - Windows

1. Access the printer driver window.

2. Click **EPSON Status Monitor 3** on the **Maintenance** tab.

   Note:
   - ❏ *You can also check the printer status by double-clicking the printer icon on the taskbar. If the printer icon is not added to the taskbar, click **Monitoring Preferences** on the **Maintenance** tab, and then select **Register the shortcut icon to the taskbar**.*
   - ❏ *If **EPSON Status Monitor 3** is disabled, click **Extended Settings** on the **Maintenance** tab, and then select **Enable EPSON Status Monitor 3**.*

Related Information

➡ "Accessing the Printer Driver" on page 22

Checking the Printer Status - Mac OS

1. Select **System Preferences** from the menu > **Printers & Scanners** (or **Print & Scan**, **Print & Fax**), and then select the printer.
2. Click **Options & Supplies** > **Utility** > **Open Printer Utility**.
3. Click **EPSON Status Monitor**.

   You can check the printer status, ink levels, and error status.

Checking the Software Status

You may be able to clear the problem by updating the software to the latest version. To check the software status, use the software update tool.

Related Information

➡ "Software Update Tools (EPSON Software Updater)" on page 66

➡ "Installing Applications" on page 67

Removing Jammed Paper

Check the error displayed on the control panel and follow the instructions to remove the jammed paper including any torn pieces. Next, clear the error.

Important:
- ❏ *Remove the jammed paper carefully. Removing the paper vigorously may cause damage to the printer.*
- ❏ *When removing jammed paper, avoid tilting the printer, placing it vertically, or turning it upside down; otherwise ink may leak.*

Related Information

➡ "Lights and Printer Status" on page 12

Removing Jammed Paper from Inside the Printer

> ⚠ ***Caution:***
>
> *Never touch the buttons on the control panel while your hand is inside the printer. If the printer starts operating, it could cause an injury. Be careful not to touch the protruding parts to avoid injury.*

1. Open the printer cover.

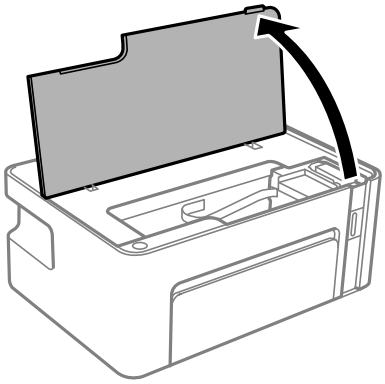

2. Remove the jammed paper.

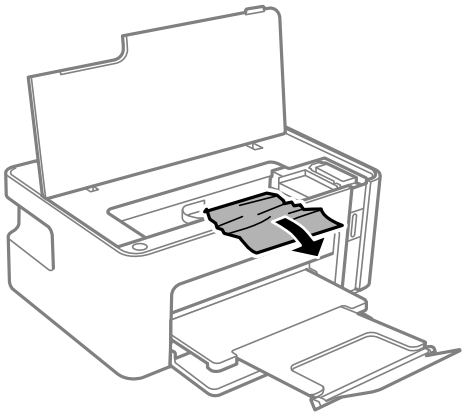

Important:

Do not touch the white flat cable or translucent film inside the printer. Doing so may cause a malfunction.

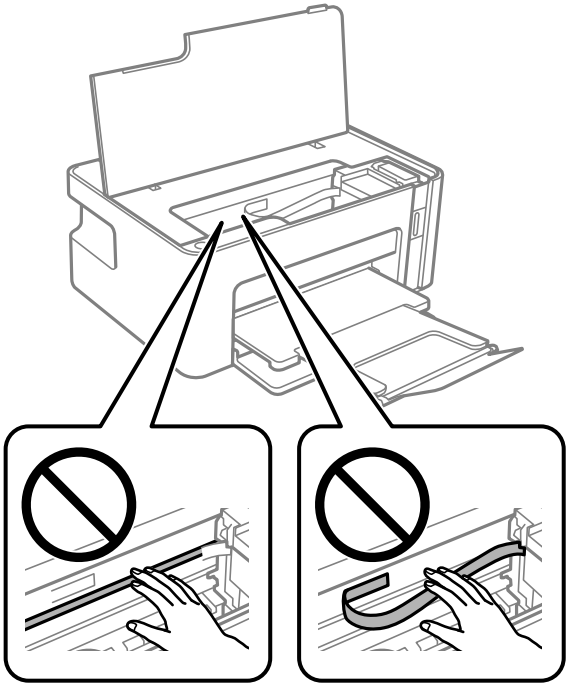

3. Close the printer cover.

Removing Jammed Paper from Rear Cover

1. Remove the rear cover.

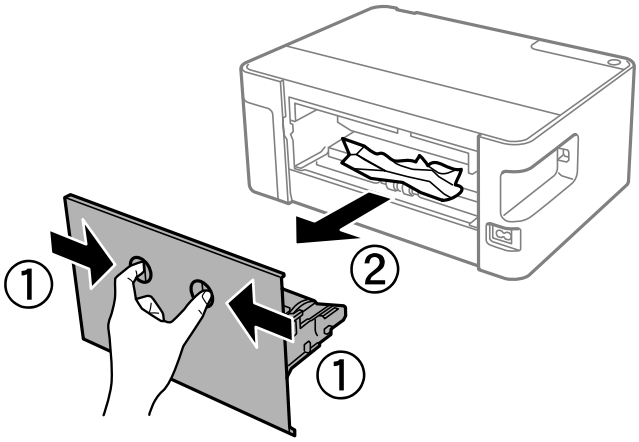

2. Remove the jammed paper.

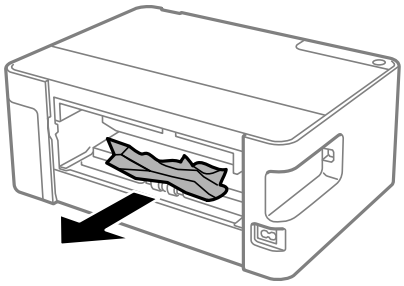

3. Remove jammed paper from the rear cover.

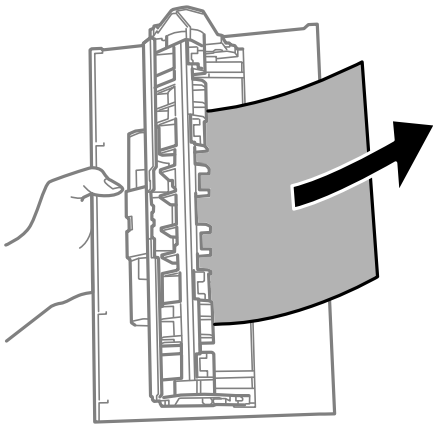

4. Insert the rear cover in the printer.

Paper Does Not Feed Correctly

Check the following points, and then take the appropriate actions to solve the problem.

❏ Place the printer on a flat surface and operate in the recommended environmental conditions.

❏ Use paper supported by this printer.

❏ Follow the paper handling precautions.

❏ Do not load more than the maximum number of sheets specified for the paper. For plain paper, do not load above the line indicated by the triangle symbol on the edge guide.

Related Information

➡ "Environmental Specifications" on page 89

➡ "Paper Handling Precautions" on page 15

➡ "Available Paper and Capacities" on page 14

➡ "List of Paper Type" on page 19

Paper Jams

Load paper in the correct direction, and slide the edge guides against the edges of the paper.

Related Information

➡ "Removing Jammed Paper" on page 72

➡ "Loading Paper in the Paper Cassette" on page 16

Paper Feeds at a Slant

Load paper in the correct direction, and slide the edge guides against the edges of the paper.

Related Information

➡ "Loading Paper in the Paper Cassette" on page 16

Several Sheets of Paper are Fed at a Time

❏ When several sheets of paper are fed at a time during manual 2-sided printing, remove any paper which is loaded in the printer before you reload the paper.

❏ If the paper is pushed in, align the paper to the paper size line on the paper cassette.

Power and Control Panel Problems

Power Does Not Turn On

❏ Make sure the power cord is securely plugged in.

❏ Hold down the ⏻ button for a little longer.

Power Does Not Turn Off

Hold down the ⏻ button for a little longer. If you still cannot turn off the printer, unplug the power cord. To prevent the print head from drying out, turn the printer back on and turn it off by pressing the ⏻ button.

Power Turns Off Automatically

❏ Windows

Click **Printer and Option Information** on the printer driver's **Maintenance** tab.

❏ Disable the **Power Off If Inactive** and **Power Off If Disconnected** settings.

❏ Disable the **Power Off Timer** setting.

❏ Mac OS

Select **System Preferences** from the menu > **Printers & Scanners** (or **Print & Scan**, **Print & Fax**), and then select the printer. Click **Options & Supplies** > **Utility** > **Open Printer Utility**, and then click **Printer Settings**.

❏ Disable the **Power Off If Inactive** and **Power Off If Disconnected** settings.

❏ Disable the **Power Off Timer** setting.

Note:
*Your product may have the **Power Off Timer** feature or **Power Off If Inactive** and **Power Off If Disconnected** features depending on the location of purchase.*

Cannot Print from a Computer

Checking the Connection (USB)

❏ Connect the USB cable securely to the printer and the computer.

❏ If you are using a USB hub, try to connect the printer directly to the computer.

❏ If the USB cable cannot be recognized, change the port, or change the USB cable.

❏ If the printer cannot print using a USB connection, try the following.

Disconnect the USB cable from the computer. Right-click on the printer icon displayed on the computer, and then select **Remove Device**. Next, connect the USB cable to the computer and try a test print.

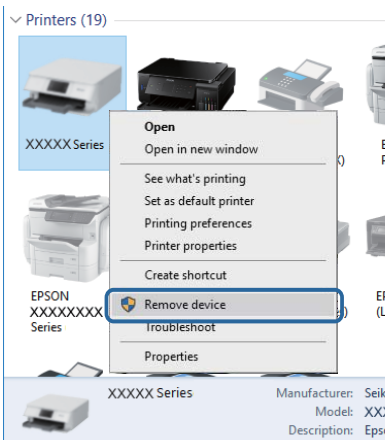

Checking the Software and Data

❏ Make sure that a genuine Epson printer driver is installed. If a genuine Epson printer driver is not installed, the available functions are limited. We recommend using a genuine Epson printer driver. See the related information link below for details.

❏ If you are printing a large data size image, the computer may run out of memory. Print the image at a lower resolution or a smaller size.

Related Information

➡ "Checking for Genuine Epson Printer Drivers" on page 78

➡ “Installing Applications” on page 67

Checking for Genuine Epson Printer Drivers

You can check if a genuine Epson printer driver is installed on your computer by using one of the following methods.

Windows

Select **Control Panel** > **View devices and printers** (**Printers**, **Printers and Faxes**), and then do the following to open the print server properties window.

❏ Windows 10/Windows 8.1/Windows 8/Windows 7/Windows Server 2016/Windows Server 2012 R2/Windows Server 2012/Windows Server 2008 R2

Click the printer icon, and then click **Print server properties** at the top of the window.

❏ Windows Vista/Windows Server 2008

Right-click on the **Printers** folder, and then click **Run as administrator** > **Server Properties**.

❏ Windows XP/Windows Server 2003 R2/Windows Server 2003

From the **File** menu, select **Server Properties**.

Click the **Driver** tab. If your printer name is displayed in the list, a genuine Epson printer driver is installed on your computer.

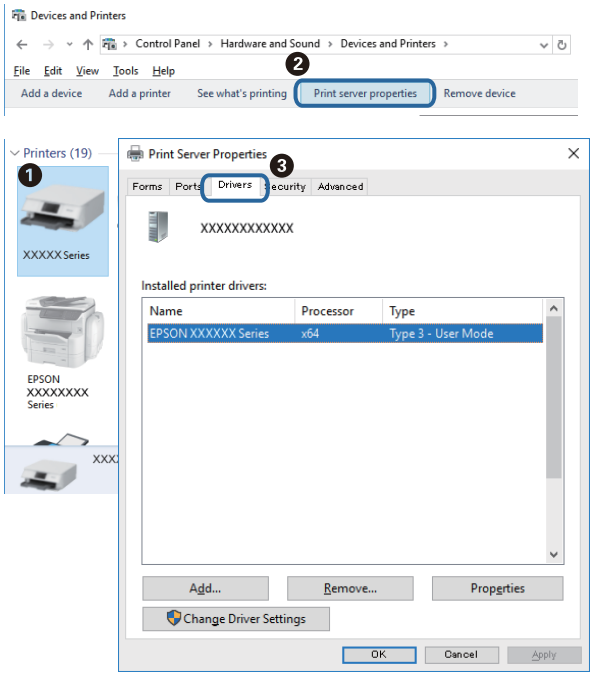

Mac OS

Select **System Preferences** from the menu > **Printers & Scanners** (or **Print & Scan**, **Print & Fax**), and then select the printer. Click **Options & Supplies**, and if the **Options** tab and **Utility** tab are displayed on the window, a genuine Epson printer driver is installed on your computer.

Related Information

➡ "Installing Applications" on page 67

Checking the Printer Status from the Computer (Windows)

Click **Print Queue** on the printer driver's **Maintenance** tab, and then check the following.

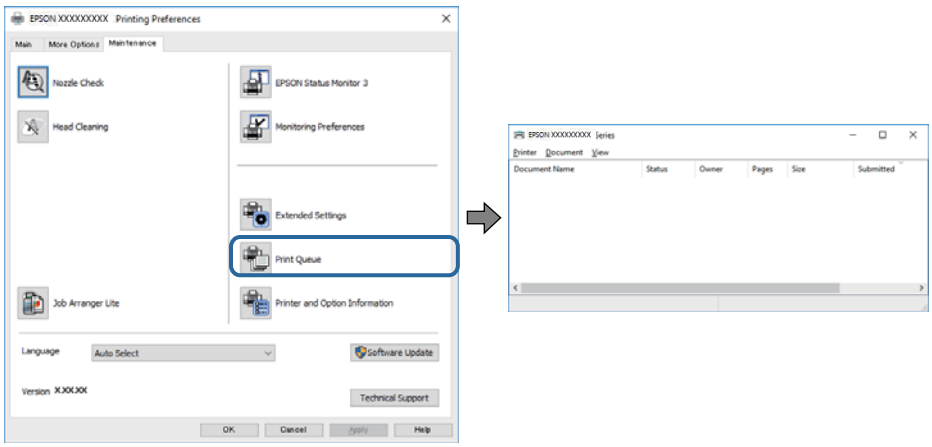

❑ Check if there are any paused print jobs.

If unnecessary data remains, select **Cancel all documents** from the **Printer** menu.

❏ Make sure the printer is not offline or pending.

If the printer is offline or pending, clear the offline or pending setting from the **Printer** menu.

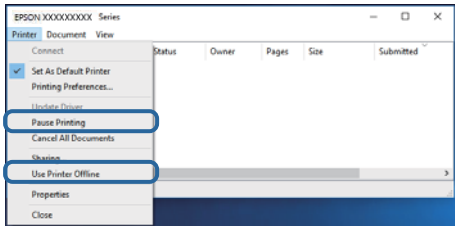

❏ Make sure the printer is selected as the default printer from the **Printer** menu (there should be a check mark on the menu item).

If the printer is not selected as the default printer, set it as the default printer. If there are multiple icons in **Control Panel** > **View devices and printers** (**Printers**, **Printers and Faxes**), see the following to select the icon.

Example)

USB connection: EPSON XXXX Series

If you install the printer driver multiple times, copies of printer driver may be created. If copies such as "EPSON XXXX Series (copy 1)" are created, right-click the copied driver icon, and then click **Remove Device**.

❏ Make sure the printer port is selected correctly in **Property** > **Port** from the **Printer** menu as follows.

Select "**USBXXX**" for a USB connection.

Checking the Printer Status from the Computer (Mac OS)

Make sure the printer status is not **Pause**.

Select **System Preferences** from the menu > **Printers & Scanners** (or **Print & Scan**, **Print & Fax**), and then double-click the printer. If the printer is paused, click **Resume** (or **Resume Printer**).

Printout Problems

Printout is Scuffed or Color is Missing

If you have not used the printer for a long time, the print head nozzles may be clogged and ink drops may not be discharged. Perform a nozzle check, and then clean the print head if any of the print head nozzles are clogged.

Related Information

➡ **"Check if Nozzles are Clogged (Nozzle Check)"** on page 53

➡ "Refilling the Ink Tank" on page 47

Banding Appears

The print head nozzles may be clogged. Perform a nozzle check to check if the print head nozzles are clogged. Clean the print head if any of the print head nozzles are clogged.

Related Information

➡ "Check if Nozzles are Clogged (Nozzle Check)" on page 53

Colored Banding Appears at Intervals of Approximately 2.5 cm

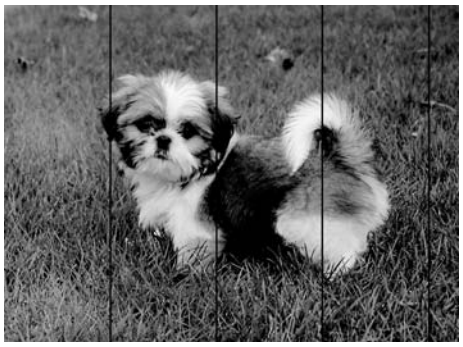

❏ Select the appropriate paper type setting for the type of paper loaded in the printer.

❏ Align the print head from a computer.

❏ When printing on plain paper, print using a higher quality setting.

Related Information

➡ "List of Paper Type" on page 19

➡ "Aligning the Print Head" on page 59

Vertical Banding or Misalignment

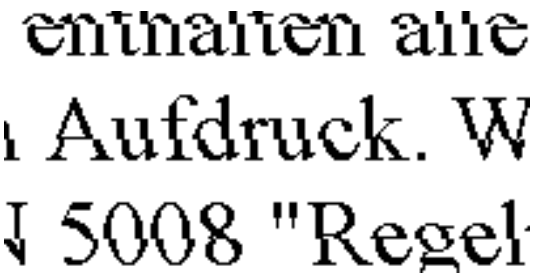

❑ Align the print head.

❑ If print quality does not improve even after aligning the print head, print using a higher quality setting.

Related Information

➡ "Aligning the Print Head" on page 59

Print Quality is Poor

Check the following if the print quality is poor due to blurry prints, banding, missing colors, faded colors, and misalignment in the prints.

Checking the printer

❑ Make sure the initial ink charging is complete.

❑ Refill the ink tank if the ink level is below the lower line.

❑ Perform a nozzle check, and then clean the print head if any of the print head nozzles are clogged.

❑ Align the print head.

Checking the paper

❑ Use paper supported by this printer.

❑ Do not print on paper that is damp, damaged, or too old.

❑ If the paper is curled or the envelope is puffed up, flatten it.

❑ Do not stack the paper immediately after printing.

❑ Dry the printouts completely before filing or displaying them. When drying the printouts, avoid direct sun light, do not use a dryer, and do not touch the printed side of paper.

❑ When printing images or photos, Epson recommends using genuine Epson paper rather than plain paper. Print on the printable side of the genuine Epson paper.

Checking the print settings

❑ Select the appropriate paper type setting for the type of paper loaded in the printer.

❑ Print using a higher quality setting.

❏ During bidirectional (or high speed) printing, the print head prints while moving in both directions, and vertical lines may be misaligned. If print quality does not improve, disable the bidirectional (or high speed) setting. Disabling this setting may slow down printing speed.

❏ Windows

Clear **High Speed** on the printer driver's **More Options** tab.

❏ Mac OS

Select **System Preferences** from the menu > **Printers & Scanners** (or **Print & Scan**, **Print & Fax**), and then select the printer. Click **Options & Supplies** > **Options** (or **Driver**). Select **Off** as the **High Speed Printing** setting.

Checking the ink bottle

❏ Use ink bottles with the correct part code for this printer.

❏ Epson recommends using the ink bottle before the date printed on the package.

❏ Try to use genuine Epson ink bottles. This product is designed to adjust colors based on the use of genuine Epson ink bottles. The use of non-genuine ink bottles may cause print quality to decline.

Related Information

➡ "**Check if Nozzles are Clogged (Nozzle Check)**" on page 53

➡ "Aligning the Print Head" on page 59

➡ "Available Paper and Capacities" on page 14

➡ "List of Paper Type" on page 19

➡ "Paper Handling Precautions" on page 15

Paper Is Smeared or Scuffed

❏ When horizontal banding appears or the top or bottom of the paper is smeared, load paper in the correct direction and slide the edge guides to the edges of the paper.

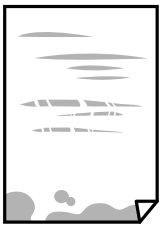

❏ When vertical banding appears or the paper is smeared, clean the paper path.

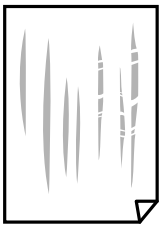

❏ Place the paper on a flat surface to check if it is curled. If it is, flatten it.

- When printing on thick paper, the print head is close to the printing surface and the paper may be scuffed. In this case, enable the reduce scuff setting. If you enable this setting, print quality may decline or printing may slow down.

  Windows

  Click **Extended Settings** on the printer driver's **Maintenance** tab, and then select **Short Grain Paper**.
- When performing manual 2-sided printing, make sure that the ink is completely dry before reloading the paper.

Related Information

➡ "Loading Paper in the Paper Cassette" on page 16

➡ "Cleaning the Paper Path" on page 59

Printed Photos are Sticky

You may be printing on the wrong side of the photo paper. Make sure you are printing on the printable side.

When printing on the wrong side of the photo paper, you need to clean the paper path.

Related Information

➡ "Cleaning the Paper Path" on page 59

The Position, Size, or Margins of the Printout Are Incorrect

- Load paper in the correct direction, and slide the edge guides against the edges of the paper.
- Select the appropriate paper size setting.
- Adjust the margin setting in the application so that it falls within the printable area.

Related Information

➡ "Loading Paper in the Paper Cassette" on page 16

➡ "Printable Area" on page 87

Printed Characters Are Incorrect or Garbled

- Connect the USB cable securely to the printer and the computer.
- Cancel any paused print jobs.
- Do not put the computer manually into the **Hibernate** mode or the **Sleep** mode while printing. Pages of garbled text may be printed next time you start the computer.
- If you use the printer driver you had previously used, printed characters may be garbled. Make sure that the printer driver you are using is for this printer. Check the printer name on the top of the printer driver window.

The Printed Image Is Inverted

Clear any mirror image settings in the printer driver or the application.

❏ Windows

Clear **Mirror Image** on the printer driver's **More Options** tab.

❏ Mac OS

Clear **Mirror Image** from the print dialog's **Print Settings** menu.

Mosaic-Like Patterns in the Prints

When printing images or photos, print using high-resolution data. Images on websites are often low resolution although they look good enough on the display, and so print quality may decline.

The Printout Problem Could Not be Cleared

If you have tried all of the solutions and have not solved the problem, try uninstalling and then reinstalling the printer driver.

Related Information

➡ "Uninstalling Applications" on page 68

➡ "Installing Applications" on page 67

Other Printing Problems

Printing Is Too Slow

❏ Close any unnecessary applications.

❏ Lower the quality setting. High quality printing slows down the printing speed.

❏ Enable the bidirectional (or high speed) setting. When this setting is enabled, the print head prints while moving in both directions, and the printing speed increases.

❏ Windows

Select **High Speed** on the printer driver's **More Options** tab.

❏ Mac OS

Select **System Preferences** from the menu > **Printers & Scanners** (or **Print & Scan**, **Print & Fax**), and then select the printer. Click **Options & Supplies** > **Options** (or **Driver**). Select **On** as the **High Speed Printing** setting.

❏ Disable quiet mode. This feature slows down the printing speed.

❏ Windows

Select **Off** as the **Quiet Mode** setting on the printer driver's **Main** tab.

❏ Mac OS

Select **System Preferences** from the menu > **Printers & Scanners** (or **Print & Scan**, **Print & Fax**), and then select the printer. Click **Options & Supplies** > **Options** (or **Driver**). Select **Off** as the **Quiet Mode** setting.

Printing Slows Down Dramatically During Continuous Printing

Printing slows down to prevent the printer mechanism from overheating and being damaged. However, you can continue printing. To return to normal printing speed, leave the printer idle for at least 30 minutes. Printing speed does not return to normal if the power is off.

Other Problems

Slight Electric Shock when Touching the Printer

If many peripherals are connected to the computer, you may feel a slight electric shock when touching the printer. Install a ground wire to the computer that is connected to the printer.

Operation Sounds Are Loud

If operations sounds are too loud, enable **Quiet Mode**. Enabling this feature may reduce printing speed.

❏ Windows printer driver

Select **On** as the **Quiet Mode** setting on the **Main** tab.

❏ Mac OS printer driver

Select **System Preferences** from the menu > **Printers & Scanners** (or **Print & Scan**, **Print & Fax**), and then select the printer. Click **Options & Supplies** > **Options** (or **Driver**). Select **On** as the **Quiet Mode** setting.

Application Is Blocked by a Firewall (for Windows Only)

Add the application to the Windows Firewall allowed program in security settings on the **Control Panel**.

Ink Spilled

❏ If ink adheres to the area around the tank, wipe it off using a napless, clean cloth or cotton swab.

❏ If ink spills on the desk or floor, wipe it off immediately. When ink is dried, it will be difficult to remove the smear. To prevent the smear from spreading, blot the ink with a dry cloth, and then wipe it with a moist cloth.

❏ If ink gets on your hands, wash them with water and soap.

Appendix

Technical Specifications

Printer Specifications

Print Head Nozzle Placement		Black ink nozzles: 180×2 rows
Weight of Paper*	Plain Paper	64 to 90 g/m²(17 to 24lb)
	Envelopes	Envelope #10, DL, C6: 75 to 90 g/m² (20 to 24 lb)

* Even when the paper thickness is within this range, the paper may not feed in the printer or the print quality may decline depending on the paper properties or quality.

Printable Area

Printable Area for Single Sheets

Print quality may decline in the shaded areas due to the printer's mechanism.

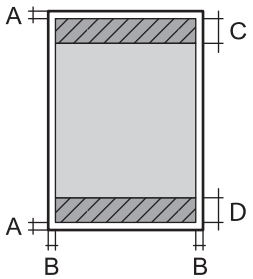

A	3.0 mm (0.12 in.)
B	3.0 mm (0.12 in.)
C	41.0 mm (1.61 in.)
D	37.0 mm (1.46 in.)

Printable Area for Envelopes

Print quality may decline in the shaded areas due to the printer's mechanism.

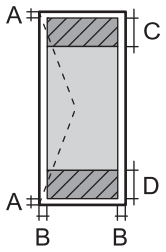

A	3.0 mm (0.12 in.)
B	5.0 mm (0.20 in.)
C	18.0 mm (0.71 in.)
D	41.0 mm (1.61 in.)

Interface Specifications

For Computer	USB

Dimensions

Dimensions	Storage ❏ Width: 375 mm (14.8 in.) ❏ Depth: 267 mm (10.5 in.) ❏ Height: 161 mm (6.3 in.) Printing ❏ Width: 375 mm (14.8 in.) ❏ Depth: 512 mm (20.2 in.) ❏ Height: 161 mm (6.3 in.)
Weight*	Approx. 3.5 kg (7.7 lb)

* Without the ink and the power cord.

Electrical Specifications

Model	100 to 240 V Model	220 to 240 V Model
Rated Frequency Range	50 to 60 Hz	50 to 60 Hz
Rated Current	0.4 to 0.2 A	0.2 A
Power Consumption (with USB Connection)	Printing: Approx. 13.0 W (ISO/IEC24712) Ready mode: Approx. 2.4 W Sleep mode: Approx. 0.4 W Power off: Approx. 0.2 W	Printing: Approx. 13.0 W (ISO/IEC24712) Ready mode: Approx. 2.4 W Sleep mode: Approx. 0.4 W Power off: Approx. 0.3 W

Note:

❏ *Check the label on the printer for its voltage.*

❏ *For European users, see the following Website for details on power consumption.*
http://www.epson.eu/energy-consumption

Environmental Specifications

Operation	Use the printer within the range shown in the following graph. 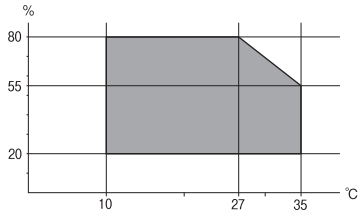 Temperature: 10 to 35°C (50 to 95°F) Humidity: 20 to 80% RH (without condensation)
Storage	Temperature: -20 to 40°C (-4 to 104°F)* Humidity: 5 to 85% RH (without condensation)

* You can store for one month at 40°C (104°F).

Environmental Specifications for Ink Bottles

Storage Temperature	-20 to 40 °C (-4 to 104 °F)*
Freezing Temperature	-15 °C (5 °F) Ink thaws and is usable after approximately 2 hours at 25 °C (77 °F).

* You can store for one month at 40 °C (104 °F).

System Requirements

❏ Windows 10 (32-bit, 64-bit)/Windows 8.1 (32-bit, 64-bit)/Windows 8 (32-bit, 64-bit)/Windows 7 (32-bit, 64-bit)/Windows Vista (32-bit, 64-bit)/Windows XP SP3 or later (32-bit)/Windows XP Professional x64 Edition SP2 or later/Windows Server 2016/Windows Server 2012 R2/Windows Server 2012/Windows Server 2008 R2/Windows Server 2008/Windows Server 2003 R2/Windows Server 2003 SP2 or later

❏ macOS High Sierra/macOS Sierra/OS X El Capitan/OS X Yosemite/OS X Mavericks/OS X Mountain Lion/Mac OS X v10.7.x/Mac OS X v10.6.8

Note:

❏ *Mac OS may not support some applications and features.*

❏ *The UNIX File System (UFS) for Mac OS is not supported.*

Regulatory Information

Standards and Approvals

Standards and Approvals for European Model

The following model is CE marked and in compliance with all the applicable EU Directives. For further details, visit the following website to access the full declaration of conformities containing reference to the Directives and harmonized standards used to declare conformity.

http://www.epson.eu/conformity

B631B

Standards and Approvals for Australian Model

EMC	AS/NZS CISPR32 Class B

Restrictions on Copying

Observe the following restrictions to ensure the responsible and legal use of the printer.

Copying of the following items is prohibited by law:

- ❏ Bank bills, coins, government-issued marketable securities, government bond securities, and municipal securities
- ❏ Unused postage stamps, pre-stamped postcards, and other official postal items bearing valid postage
- ❏ Government-issued revenue stamps, and securities issued according to legal procedure

Exercise caution when copying the following items:

- ❏ Private marketable securities (stock certificates, negotiable notes, checks, etc.), monthly passes, concession tickets, etc.
- ❏ Passports, driver's licenses, warrants of fitness, road passes, food stamps, tickets, etc.

Note:
Copying these items may also be prohibited by law.

Responsible use of copyrighted materials:

Printers can be misused by improperly copying copyrighted materials. Unless acting on the advice of a knowledgeable attorney, be responsible and respectful by obtaining the permission of the copyright holder before copying published material.

Transporting and Storing the Printer

When you need to store the printer or transport it when moving or for repairs, follow the steps below to pack the printer.

Important:

- *When storing or transporting the printer, place the printer in the plastic bag and fold it closed. Avoid tilting the printer, placing it vertically, or turning it upside down; otherwise ink may leak.*

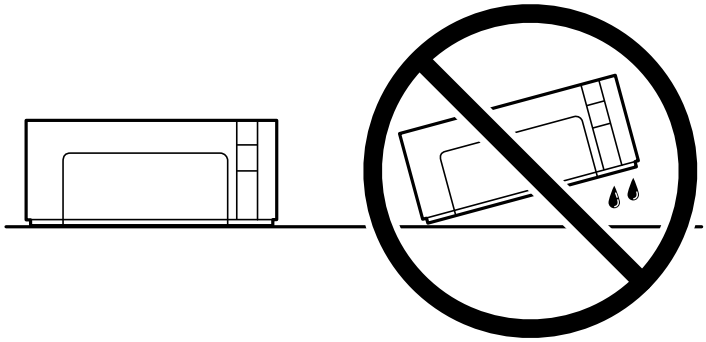

- *When storing or transporting an ink bottle, do not tilt the bottle and do not subject it to impacts or temperature changes. Otherwise, ink may leak even if the cap on the ink bottle is tightened securely. Be sure to keep the ink bottle upright when tightening the cap, and take precautions to prevent ink from leaking when transporting the bottle, for example, putting the bottle in a bag.*
- *Do not put opened ink bottles in the box with printer.*

1. Turn off the printer by pressing the ⏻ button.
2. Make sure the power light turns off, and then unplug the power cord.

   Important:

   Unplug the power cord when the power light is off. Otherwise, the print head does not return to the home position causing the ink to dry, and printing may become impossible.

3. Disconnect all cables such as the power cord and USB cable.
4. Remove all of the paper from the printer.

5. Open the printer cover. Make sure you install the cap securely onto the ink tank.

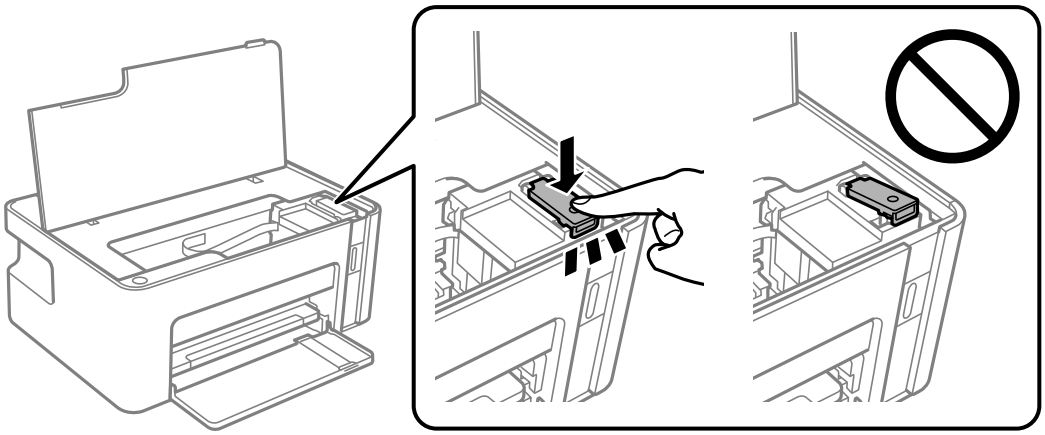

6. Secure the ink tank with tape.

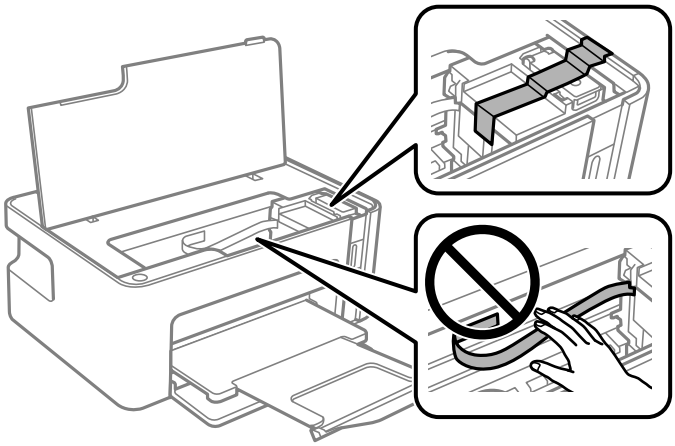

7. Prepare to pack the printer as shown below.

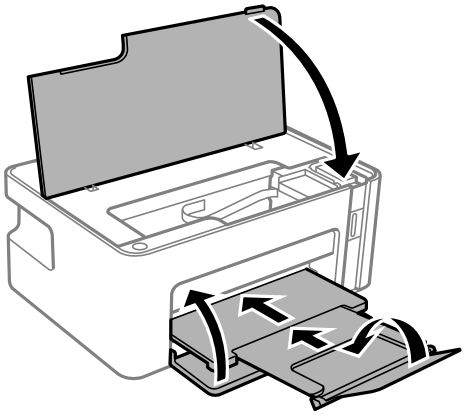

8. Place the printer in the plastic bag and fold it closed.

9. Pack the printer in its box using the protective materials.

> **Important:**
> *Make sure you keep the printer horizontal when transporting or storing the printer by packing it in its box; otherwise ink may leak.*

When you use the printer again, make sure you remove the tape securing the ink tank. If print quality has declined the next time you print, clean and align the print head.

Related Information

➡ "Part Names and Functions" on page 10
➡ "Cleaning the Print Head (Head Cleaning)" on page 56
➡ "Aligning the Print Head" on page 59

Copyright

No part of this publication may be reproduced, stored in a retrieval system, or transmitted in any form or by any means, electronic, mechanical, photocopying, recording, or otherwise, without the prior written permission of Seiko Epson Corporation. No patent liability is assumed with respect to the use of the information contained herein. Neither is any liability assumed for damages resulting from the use of the information herein. The information contained herein is designed only for use with this Epson product. Epson is not responsible for any use of this information as applied to other products.

Neither Seiko Epson Corporation nor its affiliates shall be liable to the purchaser of this product or third parties for damages, losses, costs, or expenses incurred by the purchaser or third parties as a result of accident, misuse, or abuse of this product or unauthorized modifications, repairs, or alterations to this product, or (excluding the U.S.) failure to strictly comply with Seiko Epson Corporation's operating and maintenance instructions.

Seiko Epson Corporation and its affiliates shall not be liable for any damages or problems arising from the use of any options or any consumable products other than those designated as Original Epson Products or Epson Approved Products by Seiko Epson Corporation.

Seiko Epson Corporation shall not be held liable for any damage resulting from electromagnetic interference that occurs from the use of any interface cables other than those designated as Epson Approved Products by Seiko Epson Corporation.

© 2022 Seiko Epson Corporation

The contents of this manual and the specifications of this product are subject to change without notice.

Trademarks

❑ EPSON® is a registered trademark, and EPSON EXCEED YOUR VISION or EXCEED YOUR VISION is a trademark of Seiko Epson Corporation.

❑ Microsoft®, Windows®, Windows Server®, and Windows Vista® are registered trademarks of Microsoft Corporation.

❑ Apple, Macintosh, macOS, OS X, and ColorSync are trademarks of Apple Inc., registered in the U.S. and other countries.

- Adobe and Adobe Reader are either registered trademarks or trademarks of Adobe Systems Incorporated in the United States and/or other countries.
- General Notice: Other product names used herein are for identification purposes only and may be trademarks of their respective owners. Epson disclaims any and all rights in those marks.

Where to Get Help

Technical Support Web Site

If you need further help, visit the Epson support website shown below. Select your country or region and go to the support section of your local Epson website. The latest drivers, FAQs, manuals, or other downloadables are also available from the site.

http://support.epson.net/

http://www.epson.eu/Support (Europe)

If your Epson product is not operating properly and you cannot solve the problem, contact Epson support services for assistance.

Contacting Epson Support

Before Contacting Epson

If your Epson product is not operating properly and you cannot solve the problem using the troubleshooting information in your product manuals, contact Epson support services for assistance. If Epson support for your area is not listed below, contact the dealer where you purchased your product.

Epson support will be able to help you much more quickly if you give them the following information:

- Product serial number

  (The serial number label is usually on the back of the product.)
- Product model
- Product software version

  (Click **About**, **Version Info**, or similar button in the product software.)
- Brand and model of your computer
- Your computer operating system name and version
- Names and versions of the software applications you normally use with your product

Help for Users in Europe

Check your Pan-European Warranty Document for information on how to contact Epson support.

Help for Users in Australia

Epson Australia wishes to provide you with a high level of customer service. In addition to your product manuals, we provide the following sources for obtaining information:

Internet URL

http://www.epson.com.au

Access the Epson Australia World Wide Web pages. Worth taking your modem here for the occasional surf! The site provides a download area for drivers, Epson contact points, new product information and technical support (e-mail).

Epson Helpdesk

Phone: 1300-361-054

Epson Helpdesk is provided as a final backup to make sure our clients have access to advice. Operators on the Helpdesk can aid you in installing, configuring and operating your Epson product. Our Pre-sales Helpdesk staff can provide literature on new Epson products and advise where the nearest dealer or service agent is located. Many types of queries are answered here.

We encourage you to have all the relevant information on hand when you ring. The more information you prepare, the faster we can help solve the problem. This information includes your Epson product manuals, type of computer, operating system, application programs, and any information you feel is required.

Transportation of Product

Epson recommends retaining product packaging for future transportation. Securing the ink tank with tape and keeping the product upright is also recommended.

Help for Users in New Zealand

Epson New Zealand wishes to provide you with a high level of customer service. In addition to your product documentation, we provide the following sources for obtaining information:

Internet URL

http://www.epson.co.nz

Access the Epson New Zealand World Wide Web pages. Worth taking your modem here for the occasional surf! The site provides a download area for drivers, Epson contact points, new product information and technical support (e-mail).

Epson Helpdesk

Phone: 0800 237 766

Epson Helpdesk is provided as a final backup to make sure our clients have access to advice. Operators on the Helpdesk can aid you in installing, configuring and operating your Epson product. Our Pre-sales Helpdesk staff can provide literature on new Epson products and advise where the nearest dealer or service agent is located. Many types of queries are answered here.

We encourage you to have all the relevant information on hand when you ring. The more information you prepare, the faster we can help solve the problem. This information includes your Epson product documentation, type of computer, operating system, application programs, and any information you feel is required.

Transportation of Product

Epson recommends retaining product packaging for future transportation. Securing the ink tank with tape and keeping the product upright is also recommended.

Help for Users in Singapore

Sources of information, support, and services available from Epson Singapore are:

World Wide Web

http://www.epson.com.sg

Information on product specifications, drivers for download, Frequently Asked Questions (FAQ), Sales Enquiries, and Technical Support via e-mail are available.

Epson HelpDesk

Toll Free: 800-120-5564

Our HelpDesk team can help you with the following over the phone:

- ❏ Sales enquiries and product information
- ❏ Product usage questions or problem troubleshooting
- ❏ Enquiries on repair service and warranty

Help for Users in Thailand

Contacts for information, support, and services are:

World Wide Web

http://www.epson.co.th

Information on product specifications, drivers for download, Frequently Asked Questions (FAQ), and e-mail are available.

Epson Call Centre

Phone: 66-2460-9699

Email: support@eth.epson.co.th

Our Call Centre team can help you with the following over the phone:

- ❏ Sales enquiries and product information
- ❏ Product usage questions or problems
- ❏ Enquiries on repair service and warranty

Help for Users in Vietnam

Contacts for information, support, and services are:

Epson Service Center

65 Truong Dinh Street, District 1, Ho Chi Minh City, Vietnam.

Phone(Ho Chi Minh City): 84-8-3823-9239, 84-8-3825-6234

29 Tue Tinh, Quan Hai Ba Trung, Hanoi City, Vietnam

Phone(Hanoi City): 84-4-3978-4785, 84-4-3978-4775

Help for Users in Indonesia

Contacts for information, support, and services are:

World Wide Web

http://www.epson.co.id

❏ Information on product specifications, drivers for download

❏ Frequently Asked Questions (FAQ), Sales Enquiries, questions through e-mail

Epson Hotline

Phone: +62-1500-766

Fax: +62-21-808-66-799

Our Hotline team can help you with the following over the phone or fax:

❏ Sales enquiries and product information

❏ Technical support

Epson Service Center

Province	Company Name	Address	Phone E-mail
DKI JAKARTA	ESS JAKARTA MANGGADUA	Ruko Mall Mangga Dua No. 48 Jl. Arteri Mangga Dua, Jakarta Utara - DKI JAKARTA	(+6221) 62301104 jkt-admin@epson-indonesia.co.id
NORTH SUMATERA	ESC MEDAN	Jl. Bambu 2 Komplek Graha Niaga Nomor A-4, Medan - North Sumatera	(+6261) 42066090 / 42066091 mdn-adm@epson-indonesia.co.id
WEST JAWA	ESC BANDUNG	Jl. Cihampelas No. 48 A Bandung Jawa Barat 40116	(+6222) 4207033 bdg-admin@epson-indonesia.co.id
DI YOGYAKARTA	ESC YOGYAKARTA	YAP Square, Block A No. 6 Jl. C Simanjutak Yogyakarta - DIY	(+62274) 581065 ygy-admin@epson-indonesia.co.id
EAST JAWA	ESC SURABAYA	Hitech Mall Lt. 2 Block A No. 24 Jl. Kusuma Bangsa No. 116 - 118 Surabaya - JATIM	(+6231) 5355035 sby-admin@epson-indonesia.co.id
SOUTH SULAWESI	ESC MAKASSAR	Jl. Cendrawasih NO. 3A, kunjung mae, mariso, MAKASSAR - SULSEL 90125	(+62411) 8911071 mksr-admin@epson-indonesia.co.id

Province	Company Name	Address	Phone E-mail
WEST KALIMANTAN	ESC PONTIANAK	Komp. A yani Sentra Bisnis G33, Jl. Ahmad Yani - Pontianak Kalimantan Barat	(+62561) 735507 / 767049 pontianak-admin@epson-indonesia.co.id
RIAU	ESC PEKANBARU	Jl. Tuanku Tambusai No.459A Pekanbaru Riau	(+62761) 8524695 pkb-admin@epson-indonesia.co.id
DKI JAKARTA	ESS JAKARTA SUDIRMAN	Wisma Keiai Lt. 1 Jl. Jenderal Sudirman Kav. 3 Jakarta Pusat - DKI JAKARTA 10220	(+6221) 5724335 ess@epson-indonesia.co.id
EAST JAWA	ESS SURABAYA	Ruko Surya Inti Jl. Jawa No 2-4 Kav. 29 Surabaya - Jawa Timur	(+6231) 5014949 esssby@epson-indonesia.co.id
BANTEN	ESS SERPONG	Ruko Mall WTC Matahari No. 953, Serpong-Banten	(+6221) 53167051 / 53167052 esstag@epson-indonesia.co.id
CENTRAL JAWA	ESS SEMARANG	Komplek Ruko Metro Plaza Block C20 Jl. MT Haryono No 970 Semarang - JAWA TENGAH	(+6224) 8313807 / 8417935 esssmg@epson-indonesia.co.id
EAST KALIMANTAN	ESC SAMARINDA	Jl. KH. Wahid Hasyim (M. Yamin) Kelurahan Sempaja Selatan Kecamatan Samarinda UTARA - SAMARINDA - KALTIM	(+62541) 7272904 escsmd@epson-indonesia.co.id
SOUTH SUMATERA	ESC PALEMBANG	Jl. H.M Rasyid Nawawi No. 249 Kelurahan 9 Ilir Palembang Sumatera Selatan	(+62711) 311330 escplg@epson-indonesia.co.id
EAST JAVA	ESC JEMBER	JL. Panglima Besar Sudirman Ruko no.1D Jember-Jawa Timur (Depan Balai Penelitian & Pengolahan Kakao)	(+62331) 488373 / 486468 jmr-admin@epson-indonesia.co.id
NORTH SULAWESI	ESC MANADO	Tekno Megamall Lt LG 11 TK 21, Kawasan Megamas Boulevard, Jl Piere Tendean, Manado - SULUT 95111	(+62431) 8890996 MND-ADMIN@EPSON-INDONESIA.CO.ID

For other cities not listed here, call the Hot Line: 08071137766.

Help for Users in Malaysia

Contacts for information, support, and services are:

World Wide Web

http://www.epson.com.my

❏ Information on product specifications, drivers for download

❏ Frequently Asked Questions (FAQ), Sales Enquiries, questions through e-mail

Epson Call Centre

Phone: +60 1800-8-17349

- ❏ Sales enquiries and product information
- ❏ Product usage questions or problems
- ❏ Enquiries on repair services and warranty

Head Office

Phone: 603-56288288

Fax: 603-5628 8388/603-5621 2088

Help for Users in India

Contacts for information, support, and services are:

World Wide Web

http://www.epson.co.in

Information on product specifications, drivers for download, and products enquiry are available.

Helpline

- ❏ Service, product information, and ordering consumables (BSNL Lines)
  Toll-free number: 18004250011
  Accessible 9am to 6pm, Monday through Saturday (Except public holidays)
- ❏ Service (CDMA & Mobile Users)
  Toll-free number: 186030001600
  Accessible 9am to 6pm, Monday through Saturday (Except public holidays)

Help for Users in the Philippines

To obtain technical support as well as other after sales services, users are welcome to contact the Epson Philippines Corporation at the telephone, fax numbers and e-mail address below:

World Wide Web

http://www.epson.com.ph

Information on product specifications, drivers for download, Frequently Asked Questions (FAQ), and E-mail Enquiries are available.

Epson Philippines Customer Care

Toll Free: (PLDT) 1-800-1069-37766

Toll Free: (Digital) 1-800-3-0037766

Metro Manila: (+632)441-9030

Web Site: https://www.epson.com.ph/contact

E-mail: customercare@epc.epson.som.ph

Accessible 9am to 6pm, Monday through Saturday (Except public holidays)

Our Customer Care team can help you with the following over the phone:

- ❏ Sales enquiries and product information
- ❏ Product usage questions or problems
- ❏ Enquiries on repair service and warranty

Epson Philippines Corporation

Trunk Line: +632-706-2609

Fax: +632-706-2663