EPSON
EXCEED YOUR VISION

ET-2700 / L4150 Series

User's Guide

NPD5701-09 EN

Contents

About This Manual

Introduction to the Manuals. 5
Using the Manual to Search for Information. 5
Marks and Symbols. 7
Descriptions Used in this Manual. 7
Operating System References. 7

Important Instructions

Safety Instructions. 9
Safety Instructions for Ink. 9
Printer Advisories and Warnings. 10
Advisories and Warnings for Setting Up the Printer. 10
Advisories and Warnings for Using the Printer. . 10
Advisories and Warnings for Transporting or Storing the Printer. 11
Advisories and Warnings for Using the Printer with a Wireless Connection. 11
Protecting Your Personal Information. 11

Printer Basics

Part Names and Functions. 12
Control Panel. 13

Network Settings

Network Connection Types. 16
Wi-Fi Connection. 16
Wi-Fi Direct (Simple AP) Connection. 16
Connecting to a Computer. 17
Connecting to a Smart Device. 18
Making Wi-Fi Settings from the Printer. 18
Making Wi-Fi Settings by Push Button Setup. . . . 19
Making Wi-Fi Settings by PIN Code Setup (WPS). 20
Making Wi-Fi Direct (Simple AP) Connection Settings. 21
Checking the Network Connection Status. 22
Checking the Network Status Using Network Light. 22
Printing a Network Connection Report. 22
Printing a Network Status Sheet. 29
Replacing or Adding New Access Points. 29
Changing the Connection Method to a Computer. . 29
Restoring the Network Settings from the Control Panel. 30

Preparing the Printer

Loading Papers. 31
Available Paper and Capacities. 31
Loading Paper in the Rear Paper Feed. 33
Loading Envelopes and Precautions. 35
Loading Long Papers. 36
List of Paper Type. 36
Placing Originals. 37
Placing Originals on the Scanner Glass. 37
Saving Power. 38
Saving Power - Windows. 38
Saving Power - Mac OS. 38

Printing

Printing from the Printer Driver on Windows. 40
Accessing the Printer Driver. 40
Printing Basics. 40
Printing on 2-Sides. 42
Printing Several Pages on One Sheet. 43
Printing and Stacking in Page Order (Reverse Order Printing). 43
Printing a Reduced or Enlarged Document. 44
Printing One Image on Multiple Sheets for Enlargement (Creating a Poster). 45
Printing with a Header and Footer. 51
Printing a Watermark. 52
Printing Multiple Files Together. 52
Printing Using the Color Universal Print Feature. 53
Adjusting the Print Color. 54
Printing to Emphasize Thin Lines. 54
Printing Clear Bar Codes. 55
Canceling Printing. 55
Menu Options for the Printer Driver. 56
Printing from the Printer Driver on Mac OS. 58
Printing Basics. 58
Printing Several Pages on One Sheet. 60
Printing and Stacking in Page Order (Reverse Order Printing). 60
Printing a Reduced or Enlarged Document. 61
Adjusting the Print Color. 62
Canceling Printing. 62
Menu Options for the Printer Driver. 62

Contents

Making Operation Settings for the Mac OS Printer Driver. 64
Printing from Smart Devices. 65
Using Epson iPrint. 65
Using Epson Print Enabler. 66
Canceling the Ongoing Job. 67

Copying

Copying Basics. 68
Making Multiple Copies. 68

Scanning

Scanning from the Control Panel. 69
Scanning from a Computer. 69
Scanning Using Epson Scan 2. 69
Scanning from Smart Devices. 72
Installing Epson iPrint. 72
Scanning Using Epson iPrint. 72

Refilling Ink

Checking the Ink Levels. 74
Ink Bottle Codes. 74
Ink Bottle Handling Precautions. 75
Refilling the Ink Tanks. 76

Maintaining the Printer

Checking and Cleaning the Print Head. 81
Checking and Cleaning the Print Head - Printer Buttons. 81
Checking and Cleaning the Print Head - Windows. 82
Checking and Cleaning the Print Head - Mac OS. 82
Running Power Cleaning. 82
Running Power Cleaning - Windows. 83
Running Power Cleaning - Mac OS. 83
Aligning the Print Head. 84
Aligning the Print Head - Windows. 84
Aligning the Print Head - Mac OS. 84
Cleaning the Paper Path. 84
Cleaning the Paper Path for Ink Smears. 85
Cleaning the Scanner Glass. 85
Cleaning the Translucent Film. 86
Checking the Total Number of Pages Fed Through the Printer. 87
Checking the Total Number of Pages Fed Through the Printer - Printer Buttons. 87
Checking the Total Number of Pages Fed Through the Printer - Windows. 88
Checking the Total Number of Pages Fed Through the Printer - Mac OS. 88

Network Service and Software Information

Application for Configuring Printer Operations (Web Config). 89
Running Web Config on a Web Browser. 89
Running Web Config on Windows. 90
Running Web Config on Mac OS. 90
Application for Scanning Documents and Images (Epson Scan 2). 90
Adding the Network Scanner. 91
Application for Configuring Scanning Operations from the Control Panel (Epson Event Manager). 91
Application for Laying Out Photos (Epson Easy Photo Print). 92
Application for Printing Web Pages (E-Web Print). . 93
Software Update Tools (EPSON Software Updater). 93
Installing the Latest Applications. 94
Uninstalling Applications. 95
Uninstalling Applications - Windows. 95
Uninstalling Applications - Mac OS. 96
Printing Using a Network Service. 96

Solving Problems

Checking the Printer Status. 98
Checking the Error Indicators on the Printer. . . . 98
Checking the Printer Status - Windows. 99
Checking the Printer Status - Mac OS. 100
Checking the Software Status. 100
Removing Jammed Paper. 100
Removing Jammed Paper from the Rear Paper Feed. 101
Removing Jammed Paper from Inside the Printer. 101
Paper Does Not Feed Correctly. 103
Paper Jams. 103
Paper Feeds at a Slant. 103
Several Sheets of Paper are Fed at a Time. 103
Paper Out Error Occurs. 104
Paper is Ejected During Printing. 104

Contents

Power and Control Panel Problems. 104
Power Does Not Turn On. 104
Power Does Not Turn Off. 104
Power Turns Off Automatically. 104
Cannot Print from a Computer. 105
Checking the Connection (USB). 105
Checking the Connection (Network). 105
Checking the Software and Data. 106
Checking the Printer Status from the Computer (Windows). 108
Checking the printer status from the computer (Mac OS). 108
When You Cannot Make Network Settings. 109
Cannot Connect from Devices Even Though Network Settings are No Problems. 109
When You Cannot Connect Using Wi-Fi Direct (Simple AP) Connection. 111
Checking the SSID Connected to the Printer. . . 112
Checking the SSID for the Computer. 113
Printout Problems. 114
Printout is Scuffed or Color is Missing. 114
Banding or Unexpected Colors Appear. 114
Colored Banding Appears at Intervals of Approximately 2.5 cm. 114
Blurry Prints, Vertical Banding, or Misalignment. 115
Print Quality is Poor. 115
Paper Is Smeared or Scuffed. 116
Printed Photos are Sticky. 118
Images or Photos are Printed in Unexpected Colors. 118
Cannot Print Without Margins. 118
Edges of the Image are Cropped During Borderless Printing. 118
The Position, Size, or Margins of the Printout Are Incorrect. 118
Printed Characters Are Incorrect or Garbled. . . 119
The Printed Image Is Inverted. 119
Mosaic-Like Patterns in the Prints. 119
Uneven Colors, Smears, Dots, or Straight Lines Appear in the Copied Image. 119
Moiré (Cross-Hatch) Patterns Appear in the Copied Image. 120
Banding Appears on the Copied Image. 120
An Image of the Reverse Side of the Original Appears in the Copied Image. 120
The Printout Problem Could Not be Cleared. . . 120
Other Printing Problems. 120
Printing Is Too Slow. 120
Printing Slows Down Dramatically During Continuous Printing. 121
Cannot Start Scanning. 121
Scanned Image Problems. 122
Uneven Colors, Dirt, Spots, and so on Appear when Scanning from the Scanner Glass. 122
The Image Quality Is Rough. 122
Offset Appears in the Background of Images. . . 122
Text is Blurred. 122
Moiré Patterns (Web-Like Shadows) Appear. . . 123
Cannot Scan the Correct Area on the Scanner Glass. 123
Text is Not Recognized Correctly when Saving as a Searchable PDF. 123
Cannot Solve Problems in the Scanned Image. . 124
Other Scanning Problems. 125
Scanning Speed Is Slow. 125
Scanning Stops when Scanning to PDF/ Multi-TIFF. 125
Other Problems. 125
Slight Electric Shock when Touching the Printer. 125
Operation Sounds Are Loud. 125
Application Is Blocked by a Firewall (for Windows Only). 126
Ink Spilled. 126

Appendix

Technical Specifications. 127
Printer Specifications. 127
Scanner Specifications. 128
Interface Specifications. 128
Network Function List. 129
Wi-Fi Specifications. 129
Security Protocol. 130
Supported Third Party Services. 130
Dimensions. 130
Electrical Specifications. 130
Environmental Specifications. 131
System Requirements. 131
Regulatory Information. 132
Standards and Approvals. 132
Restrictions on Copying. 133
Transporting and Storing the Printer. 133
Copyright. 137
Trademarks. 137
Where to Get Help. 138
Technical Support Web Site. 138
Contacting Epson Support. 138

About This Manual

Introduction to the Manuals

The following manuals are supplied with your Epson printer. As well as the manuals, see the help included in the various Epson software applications.

❏ Important Safety Instructions (paper manual)

Provides you with instructions to ensure the safe use of this printer.

❏ Start Here (paper manual)

Provides you with information on setting up the printer, installing the software, using the printer, and so on.

❏ User's Guide (digital manual)

This manual. Provides overall information and instructions on using the printer, on network settings when using the printer on a network, and on solving problems.

You can obtain the latest versions of the above manuals with the following methods.

❏ Paper manual

Visit the Epson Europe support website at http://www.epson.eu/Support, or the Epson worldwide support website at http://support.epson.net/.

❏ Digital manual

Start EPSON Software Updater on your computer. EPSON Software Updater checks for available updates of Epson software applications and the digital manuals, and allows you to download the latest ones.

Related Information

➡ "Software Update Tools (EPSON Software Updater)" on page 93

Using the Manual to Search for Information

The PDF manual allows you to search for information you are looking for by keyword, or jump directly to specific sections using the bookmarks. You can also print only the pages you need. This section explains how to use a PDF manual that has been opened in Adobe Reader X on your computer.

Searching by keyword

Click **Edit** > **Advanced Search**. Enter the keyword (text) for information you want to find in the search window, and then click **Search**. Hits are displayed as a list. Click one of the displayed hits to jump to that page.

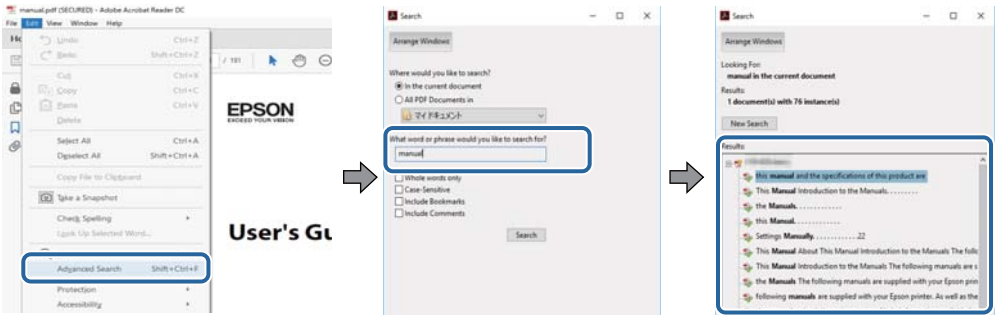

Jumping directly from bookmarks

Click a title to jump to that page. Click + or > to view the lower level titles in that section. To return to the previous page, perform the following operation on your keyboard.

❏ Windows: Hold down **Alt**, and then press ←.

❏ Mac OS: Hold down the command key, and then press ←.

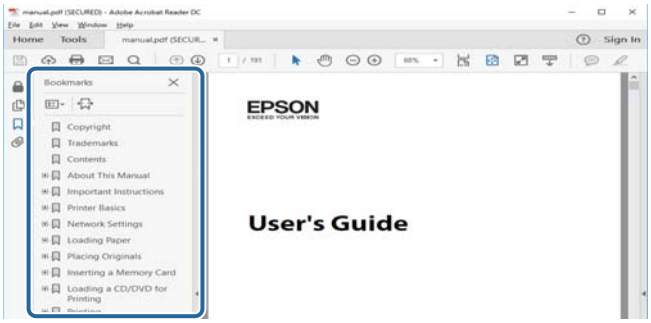

Printing only the pages you need

You can extract and print only the pages you need. Click **Print** in the **File** menu, and then specify the pages you want to print in **Pages** in **Pages to Print**.

❏ To specify a series of pages, enter a hyphen between the start page and the end page.

Example: 20-25

❏ To specify pages that are not in series, divide the pages with commas.

Example: 5, 10, 15

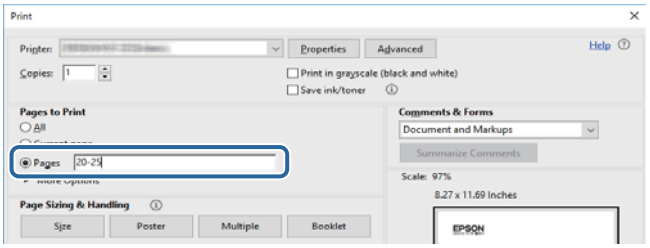

Marks and Symbols

Caution:
Instructions that must be followed carefully to avoid bodily injury.

Important:
Instructions that must be observed to avoid damage to your equipment.

Note:
Provides complementary and reference information.

➡ Related Information

Links to related sections.

Descriptions Used in this Manual

- ❏ Screenshots of the printer driver and the Epson Scan 2 (scanner driver) screens are from Windows 10 or macOS Sierra. The content displayed on the screens varies depending on the model and situation.
- ❏ Illustrations of the printer used in this manual are examples only. Although there may be slight differences depending on the model, the method of operation is the same.

Operating System References

Windows

In this manual, terms such as "Windows 10", "Windows 8.1", "Windows 8", "Windows 7", "Windows Vista", "Windows XP", "Windows Server 2016", "Windows Server 2012 R2", "Windows Server 2012", "Windows Server 2008 R2", "Windows Server 2008", "Windows Server 2003 R2", and "Windows Server 2003" refer to the following operating systems. Additionally, "Windows" is used to refer to all versions.

- ❏ Microsoft® Windows® 10 operating system
- ❏ Microsoft® Windows® 8.1 operating system
- ❏ Microsoft® Windows® 8 operating system
- ❏ Microsoft® Windows® 7 operating system
- ❏ Microsoft® Windows Vista® operating system
- ❏ Microsoft® Windows® XP operating system
- ❏ Microsoft® Windows® XP Professional x64 Edition operating system
- ❏ Microsoft® Windows Server® 2016 operating system
- ❏ Microsoft® Windows Server® 2012 R2 operating system
- ❏ Microsoft® Windows Server® 2012 operating system
- ❏ Microsoft® Windows Server® 2008 R2 operating system

- ❏ Microsoft® Windows Server® 2008 operating system
- ❏ Microsoft® Windows Server® 2003 R2 operating system
- ❏ Microsoft® Windows Server® 2003 operating system

Mac OS

In this manual, "Mac OS" is used to refer to macOS Sierra, OS X El Capitan, OS X Yosemite, OS X Mavericks, OS X Mountain Lion, Mac OS X v10.7.x, and Mac OS X v10.6.8.

Important Instructions

Safety Instructions

Read and follow these instructions to ensure safe use of this printer. Make sure you keep this manual for future reference. Also, be sure to follow all warnings and instructions marked on the printer.

- ❏ Some of the symbols used on your printer are to ensure safety and proper use of the printer. Visit the following Web site to learn the meaning of the symbols.

  http://support.epson.net/symbols

- ❏ Use only the power cord supplied with the printer and do not use the cord with any other equipment. Use of other cords with this printer or the use of the supplied power cord with other equipment may result in fire or electric shock.
- ❏ Be sure your AC power cord meets the relevant local safety standard.
- ❏ Never disassemble, modify, or attempt to repair the power cord, plug, printer unit, scanner unit, or options by yourself, except as specifically explained in the printer's manuals.
- ❏ Unplug the printer and refer servicing to qualified service personnel under the following conditions:

  The power cord or plug is damaged; liquid has entered the printer; the printer has been dropped or the casing damaged; the printer does not operate normally or exhibits a distinct change in performance. Do not adjust controls that are not covered by the operating instructions.
- ❏ Place the printer near a wall outlet where the plug can be easily unplugged.
- ❏ Do not place or store the printer outdoors, near excessive dirt or dust, water, heat sources, or in locations subject to shocks, vibrations, high temperature or humidity.
- ❏ Take care not to spill liquid on the printer and not to handle the printer with wet hands.
- ❏ Keep the printer at least 22 cm away from cardiac pacemakers. Radio waves from this printer may adversely affect the operation of cardiac pacemakers.

Safety Instructions for Ink

- ❏ Be careful not to touch any ink when you handle the ink tanks, ink tank caps, and opened ink bottles or ink bottle caps.
  - ❏ If ink gets on your skin, wash the area thoroughly with soap and water.
  - ❏ If ink gets into your eyes, flush them immediately with water. If discomfort or vision problems continue after a thorough flushing, see a doctor immediately.
  - ❏ If ink gets into your mouth, see a doctor right away.
- ❏ Do not shake an ink bottle too vigorously or subject it to strong impacts as this can cause ink to leak.
- ❏ Keep ink bottles and the ink tank unit out of the reach of children. Do not allow children to drink from or handle the ink bottles and ink bottle cap.

Printer Advisories and Warnings

Read and follow these instructions to avoid damaging the printer or your property. Make sure you keep this manual for future reference.

Advisories and Warnings for Setting Up the Printer

- ❏ Do not block or cover the vents and openings in the printer.
- ❏ Use only the type of power source indicated on the printer's label.
- ❏ Avoid using outlets on the same circuit as photocopiers or air control systems that regularly switch on and off.
- ❏ Avoid electrical outlets controlled by wall switches or automatic timers.
- ❏ Keep the entire computer system away from potential sources of electromagnetic interference, such as loudspeakers or the base units of cordless telephones.
- ❏ The power-supply cords should be placed to avoid abrasions, cuts, fraying, crimping, and kinking. Do not place objects on top of the power-supply cords and do not allow the power-supply cords to be stepped on or run over. Be particularly careful to keep all the power-supply cords straight at the ends and the points where they enter and leave the transformer.
- ❏ If you use an extension cord with the printer, make sure that the total ampere rating of the devices plugged into the extension cord does not exceed the cord's ampere rating. Also, make sure that the total ampere rating of all devices plugged into the wall outlet does not exceed the wall outlet's ampere rating.
- ❏ If you plan to use the printer in Germany, the building installation must be protected by a 10 or 16 amp circuit breaker to provide adequate short-circuit protection and over-current protection for the printer.
- ❏ When connecting the printer to a computer or other device with a cable, ensure the correct orientation of the connectors. Each connector has only one correct orientation. Inserting a connector in the wrong orientation may damage both devices connected by the cable.
- ❏ Place the printer on a flat, stable surface that extends beyond the base of the printer in all directions. The printer will not operate properly if it is tilted at an angle.
- ❏ Allow space above the printer so that you can fully raise the document cover.
- ❏ Leave enough space in front of the printer for the paper to be fully ejected.
- ❏ Avoid places subject to rapid changes in temperature and humidity. Also, keep the printer away from direct sunlight, strong light, or heat sources.

Advisories and Warnings for Using the Printer

- ❏ Do not insert objects through the slots in the printer.
- ❏ Do not put your hand inside the printer during printing.
- ❏ Do not touch the white flat cable and ink tubes inside the printer.
- ❏ Do not use aerosol products that contain flammable gases inside or around the printer. Doing so may cause fire.
- ❏ Do not move the print head by hand; otherwise, you may damage the printer.
- ❏ Be careful not to trap your fingers when closing the scanner unit.
- ❏ Do not press too hard on the scanner glass when placing the originals.

- ❏ If any of the ink tanks are not filled up to the lower line, refill the ink soon. Prolonged use of the printer when the ink level is below the lower line could damage the printer.
- ❏ Always turn the printer off using the ⏻ button. Do not unplug the printer or turn off the power at the outlet until the ⏻ light stops flashing.
- ❏ If you are not going to use the printer for a long period, be sure to unplug the power cord from the electrical outlet.

Advisories and Warnings for Transporting or Storing the Printer

- ❏ When storing or transporting the printer, avoid tilting it, placing it vertically, or turning it upside down; otherwise ink may leak.
- ❏ Before transporting the printer, make sure that the print head is in the home (far right) position.

Advisories and Warnings for Using the Printer with a Wireless Connection

- ❏ Radio waves from this printer may negatively affect the operation of medical electronic equipment, causing them to malfunction. When using this printer inside medical facilities or near medical equipment, follow directions from the authorized personnel representing the medical facilities, and follow all posted warnings and directions on the medical equipment.
- ❏ Radio waves from this printer may negatively affect the operation of automatically controlled devices such as automatic doors or fire alarms, and could lead to accidents due to malfunction. When using this printer near automatically controlled devices, follow all posted warnings and directions on these devices.

Protecting Your Personal Information

When you give the printer to someone else or dispose of it, erase the network settings stored in the printer's memory by turning on the printer while holding down the button on the control panel.

Printer Basics

Part Names and Functions

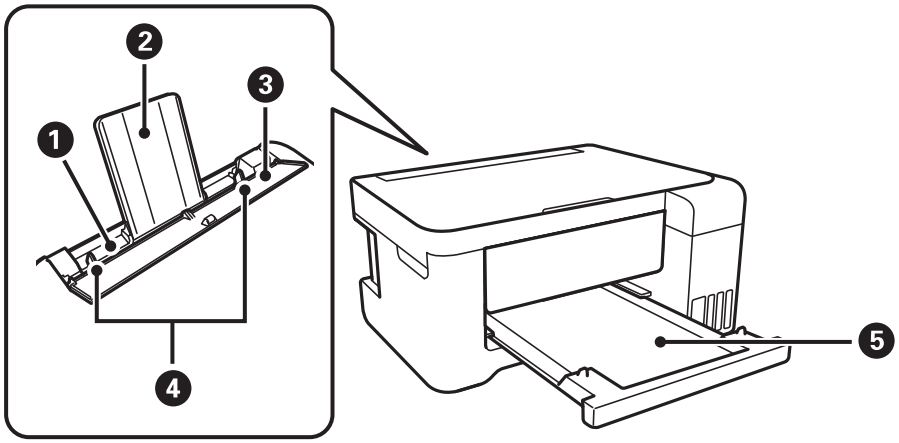

❶	Rear paper feed	Loads paper.
❷	Paper support	Supports loaded paper.
❸	Feeder guard	Prevents foreign substance from entering the printer. Usually keep this guard closed.
❹	Edge guides	Feeds the paper straight into the printer. Slide to the edges of the paper.
❺	Output tray	Holds the ejected paper.

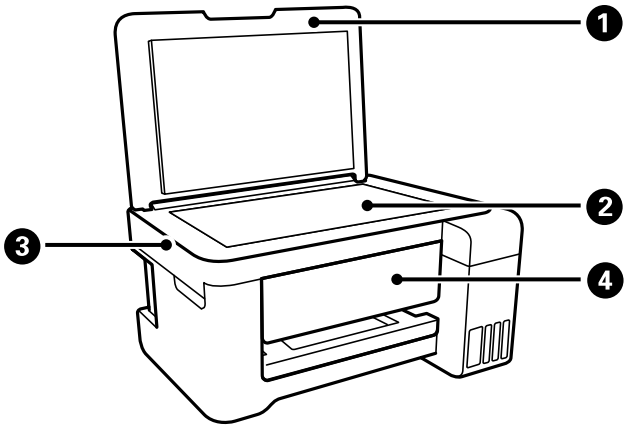

❶	Document cover	Blocks external light while scanning.
❷	Scanner glass	Place the originals.
❸	Scanner unit	Scans placed originals.
❹	Control panel	Indicates the printer's status and allows you to make print settings.

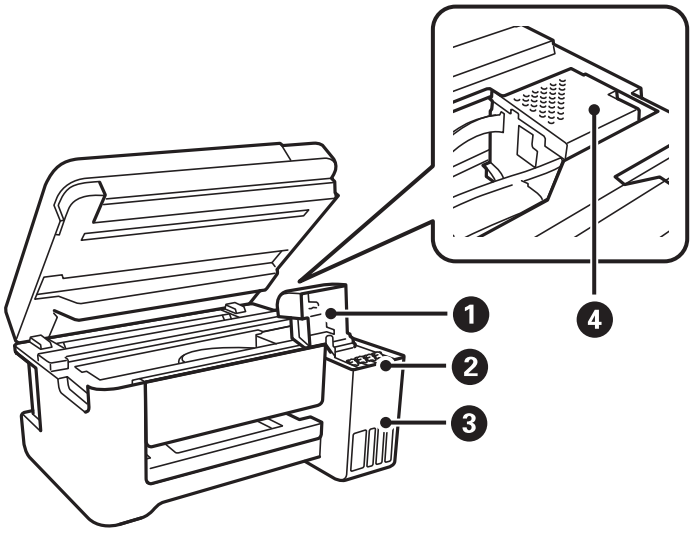

1	Ink tank cover	Open to refill the ink tank.
2	Ink reservoir tank (Ink tank)	Supplies ink to the print head.
3	Ink tank unit	Contains the ink tanks.
4	Print head	Ink is ejected from the print head nozzles underneath.

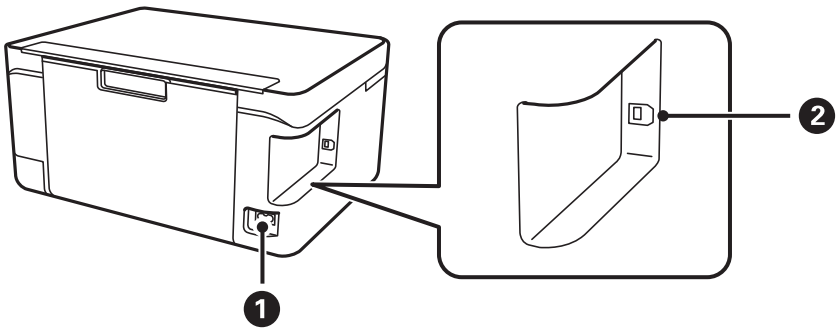

1	AC inlet	Connects the power cord.
2	USB port	Connects a USB cable to connect with a computer.

Control Panel

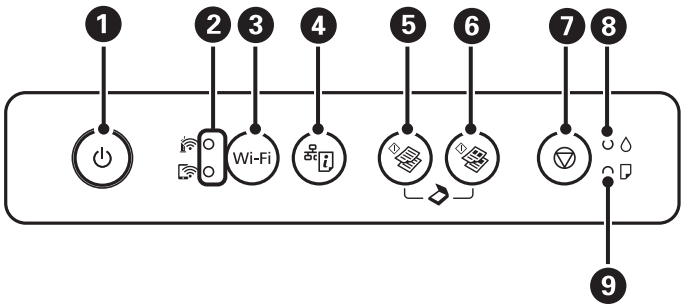

❶	Turns the printer on or off. Unplug the power cord after checking that the power light is off.
❷	The upper and lower lights indicate the network status. ❏ (Upper light): Turns on while the printer is connected to a wireless (Wi-Fi) network. ❏ (Lower light): Turns on while the printer is connected to a network in Wi-Fi Direct (Simple AP) mode. The lights flash alternately or simultaneously while initializing, making network settings, or a problem with the printer's wireless (Wi-Fi) network connection occurs.
❸	When a network error occurs, pressing this button cancels the error. Hold this button down for more than three seconds to perform Wi-Fi auto setup using the WPS push button.
❹	Prints a network connection report allowing you to determine the causes of any problems you may have using the printer on a network. If you need more detailed network settings and connection status, hold this button down for at least 10 seconds to print a network status sheet.
❺	Starts monochrome copying on A4 size plain paper. To increase the number of copies (by up to 20 copies), press this button within one second intervals.
❻	Starts color copying on A4 size plain paper. To increase the number of copies (by up to 20 copies), press this button within one second intervals.
❼	Stops the current operation. Hold this button down for three seconds until the button flashes to run print head cleaning.
❽	Indicates the status of the initial ink charging.
❾	Turns on or flashes when paper is out or a paper jam occurs.

Additional functions are available with different combinations of buttons.

+	Press the and buttons simultaneously to run software on a USB-connected computer and scan as a PDF file.
+ or	Press the and the or buttons simultaneously to copy in draft mode.
Wi-Fi +	Hold down the Wi-Fi and buttons simultaneously to start PIN Code Setup (WPS).
Wi-Fi +	Hold down the Wi-Fi and buttons simultaneously to start Wi-Fi Direct (Simple AP) Setup.
+	Turn the printer on while holding down the button to restore the default network settings. When the network settings are restored, the printer turns on and the network status lights flash alternately.
+	Turn the printer on while holding down the button to print the nozzle check pattern.

Related Information

➡ “Checking the Error Indicators on the Printer” on page 98

➡ “Making Wi-Fi Settings by PIN Code Setup (WPS)” on page 20

➡ “Restoring the Network Settings from the Control Panel” on page 30

Network Settings

Network Connection Types

You can use the following connection methods.

Wi-Fi Connection

Connect the printer and the computer or smart device to the access point. This is the typical connection method for home or office networks where computers are connected by Wi-Fi through the access point.

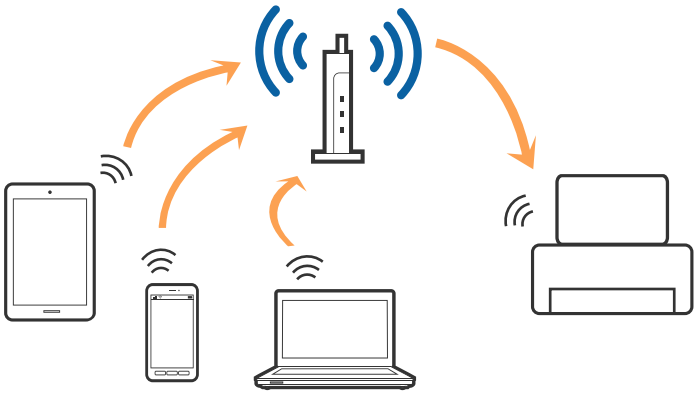

Related Information

➡ “Connecting to a Computer” on page 17

➡ “Connecting to a Smart Device” on page 18

➡ “Making Wi-Fi Settings from the Printer” on page 18

Wi-Fi Direct (Simple AP) Connection

Use this connection method when you are not using Wi-Fi at home or at the office, or when you want to connect the printer and the computer or smart device directly. In this mode, the printer acts as an access point and you can connect up to four devices to the printer without having to use a standard access point. However, devices directly connected to the printer cannot communicate with each other through the printer.

Note:
Wi-Fi Direct (Simple AP) connection is a connection method designed to replace Ad Hoc mode.

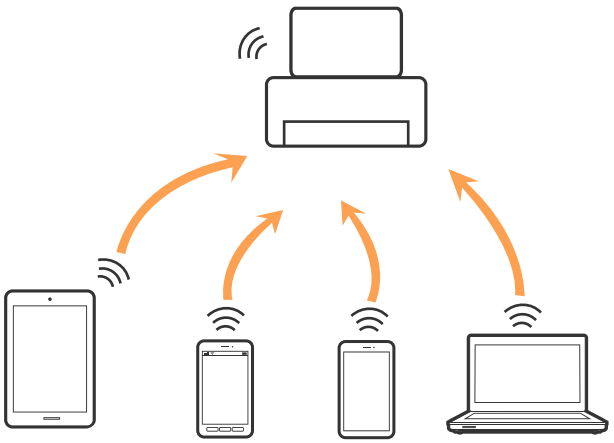

The printer can be connected by Wi-Fi and Wi-Fi Direct (Simple AP) connection simultaneously. However, if you start a network connection in Wi-Fi Direct (Simple AP) connection when the printer is connected by Wi-Fi, the Wi-Fi is temporarily disconnected.

Related Information

➡ "Making Wi-Fi Direct (Simple AP) Connection Settings" on page 21

Connecting to a Computer

We recommend using the installer to connect the printer to a computer. You can run the installer using one of the following methods.

❏ Setting up from the website

Access the following website, and then enter the product name. Go to **Setup**, and then start setting up.

http://epson.sn

❏ Setting up using the software disc (only for the models that come with a software disc and users with computers with disc drives.)

Insert the software disc into the computer, and then follow the on-screen instructions.

Selecting the Connection Methods

Follow the on-screen instructions until the following screen is displayed, and then select the connection method of the printer to the computer.

Select the connection type and then click **Next**.

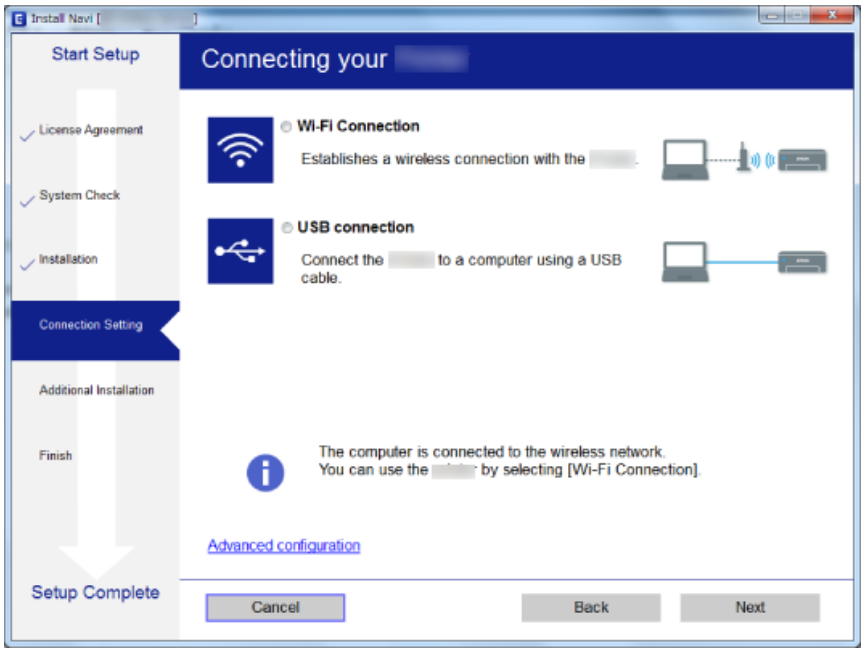

Follow the on-screen instructions.

Connecting to a Smart Device

You can use the printer from a smart device when you connect the printer to the same Wi-Fi network (SSID) as the smart device. To use the printer from a smart device, set up from the following website. Access to the website from the smart device that you want to connect to the printer.

http://epson.sn > **Setup**

Note:
If you want to connect a computer and a smart device to the printer at the same time, we recommend connecting the computer first.

Making Wi-Fi Settings from the Printer

You can make network settings from the printer's control panel in several ways. Choose the connection method that matches the environment and conditions that you are using.

If the access point supports WPS, you can make settings by using push button setup.

After connecting the printer to the network, connect to the printer from the device that you want to use (computer, smart device, tablet, and so on.)

Related Information

➡ “Making Wi-Fi Settings by Push Button Setup” on page 19

➡ “Making Wi-Fi Settings by PIN Code Setup (WPS)” on page 20

➡ “Making Wi-Fi Direct (Simple AP) Connection Settings” on page 21

Making Wi-Fi Settings by Push Button Setup

You can automatically set up a Wi-Fi network by pressing a button on the access point. If the following conditions are met, you can set up by using this method.

❏ The access point is compatible with WPS (Wi-Fi Protected Setup).

❏ The current Wi-Fi connection was established by pressing a button on the access point.

Note:
If you cannot find the button or you are setting up using the software, see the documentation provided with the access point.

1. Hold down the [WPS] button on the access point until the security light flashes.

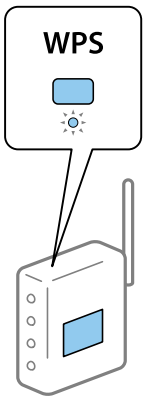

If you do not know where the [WPS] button is, or there are no buttons on the access point, see the documentation provided with your access point for details.

2. Press the Wi-Fi button on the printer until the light and the light flash alternately (approximately 3 seconds).

The connection setting will start. When a connection is established, the light turns on.



Note:

The printer is in a connection error status when the light and the light flash simultaneously. After clearing the printer error by pressing the Wi-Fi button on the printer, reboot the access point, place it close to the printer and try again. If it still does not work, print a network connection report and check the solution.



Related Information

➡ "Checking the Network Connection Status" on page 22

➡ “Printing a Network Connection Report” on page 22

➡ “When You Cannot Make Network Settings” on page 109

Making Wi-Fi Settings by PIN Code Setup (WPS)

You can connect to an access point by using a PIN code that is printed on the network status sheet. You can use this method to set up if an access point is capable of WPS (Wi-Fi Protected Setup). Use a computer to enter a PIN code into the access point.

1. Load papers.
2. Hold down the button on the printer for at least 10 seconds.

   The network status sheet is printed.

   Note:

   If you release the button within 10 seconds, a network connection report is printed. Note that PIN code information is not printed on this report.
3. While holding down the Wi-Fi button, press the button until the light and the light flash alternately.
4. Use your computer to enter the PIN code (an eight digit number) printed on [WPS-PIN Code] column of the network status sheet into the access point within two minutes.

   When a connection is established, the light turns on.

   

   Note:

   ❏ *See the documentation provided with your access point for details on entering a PIN code.*

   ❏ *The printer is in a connection error status when the light and the light flash simultaneously. After clearing the printer error by pressing the Wi-Fi button on the printer, reboot the access point, place it close to the printer and try again. If it still does not work, print a network connection report and check the solution.*

   

Related Information

➡ “Printing a Network Status Sheet” on page 29

➡ “Checking the Network Connection Status” on page 22

➡ “Printing a Network Connection Report” on page 22

➡ “When You Cannot Make Network Settings” on page 109

Making Wi-Fi Direct (Simple AP) Connection Settings

This method allows you to connect the printer directly to devices without an access point. The printer acts as an access point.

> ***Important:***
>
> *When you connect from a computer or smart device to the printer using the Wi-Fi Direct (Simple AP) connection, the printer is connected to the same Wi-Fi network (SSID) as the computer or smart device and the communication is established between them. Since the computer or smart device is automatically connected to the other connectable Wi-Fi network if the printer is turned off, it is not connected to the previous Wi-Fi network again if the printer is turned on. Connect to the printer's SSID for Wi-Fi Direct (Simple AP) connection from the computer or smart device again. If you do not want to connect every time you turn the printer on or off, we recommend using Wi-Fi network by connecting the printer to an access point.*

1. While holding down the Wi-Fi button, press the button until the light and the light flash alternately.

   Wait until the process ends.

   When a connection is established, the light turns on.

   

2. Load papers.

3. Hold down the button on the printer for at least 10 seconds.

   The network status sheet is printed. You can check the SSID and Password for Wi-Fi Direct (Simple AP) on this sheet.

   Note:

   If you release the button within 10 seconds, a network connection report is printed. Note that the SSID and Password for Wi-Fi Direct (Simple AP) are not printed on this report.

4. On the computer's network connection screen or the smart device's Wi-Fi screen, select the same SSID shown on the network status sheet to connect.

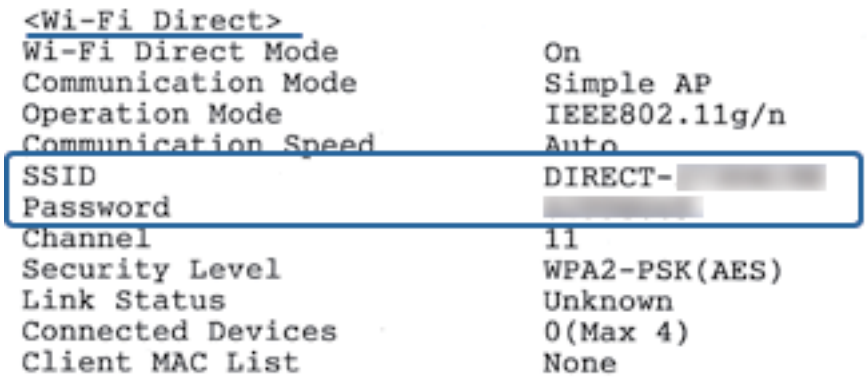

<Wi-Fi Direct>	
Wi-Fi Direct Mode	On
Communication Mode	Simple AP
Operation Mode	IEEE802.11g/n
Communication Speed	Auto
SSID	DIRECT-
Password	
Channel	11
Security Level	WPA2-PSK(AES)
Link Status	Unknown
Connected Devices	0(Max 4)
Client MAC List	None

5. Enter the password printed on the network status sheet into the computer or smart device.

   You can confirm the status of Wi-Fi Direct on the network status sheet.

Note:
When you connect from a smart device using Wi-Fi Direct connection (for Android)

When you are using an Android device and connect to the printer using Wi-Fi Direct, the  *light and*  *light flash simultaneously on the printer.*

Press the **Wi-Fi***button to allow the connection request.*

Press the ⊘ *button if you want to reject the connection request.*

See Tips on the following website for more details.

http://epson.sn > ***Support***

Related Information

➡ "Printing a Network Status Sheet" on page 29
➡ "Checking the Network Connection Status" on page 22
➡ "When You Cannot Connect Using Wi-Fi Direct (Simple AP) Connection" on page 111

Checking the Network Connection Status

You can check the network connection status in the following way.

Checking the Network Status Using Network Light

You can check the network connection status using the network light on the printer's control panel.

Related Information

➡ "Control Panel" on page 13

Printing a Network Connection Report

You can print a network connection report to check the status between the printer and the access point.

1. Load papers.
2. Press the  button.

   The network connection report is printed.

Related Information

➡ "Messages and Solutions on the Network Connection Report" on page 23

Messages and Solutions on the Network Connection Report

Check the messages and error codes on the network connection report, and then follow the solutions.

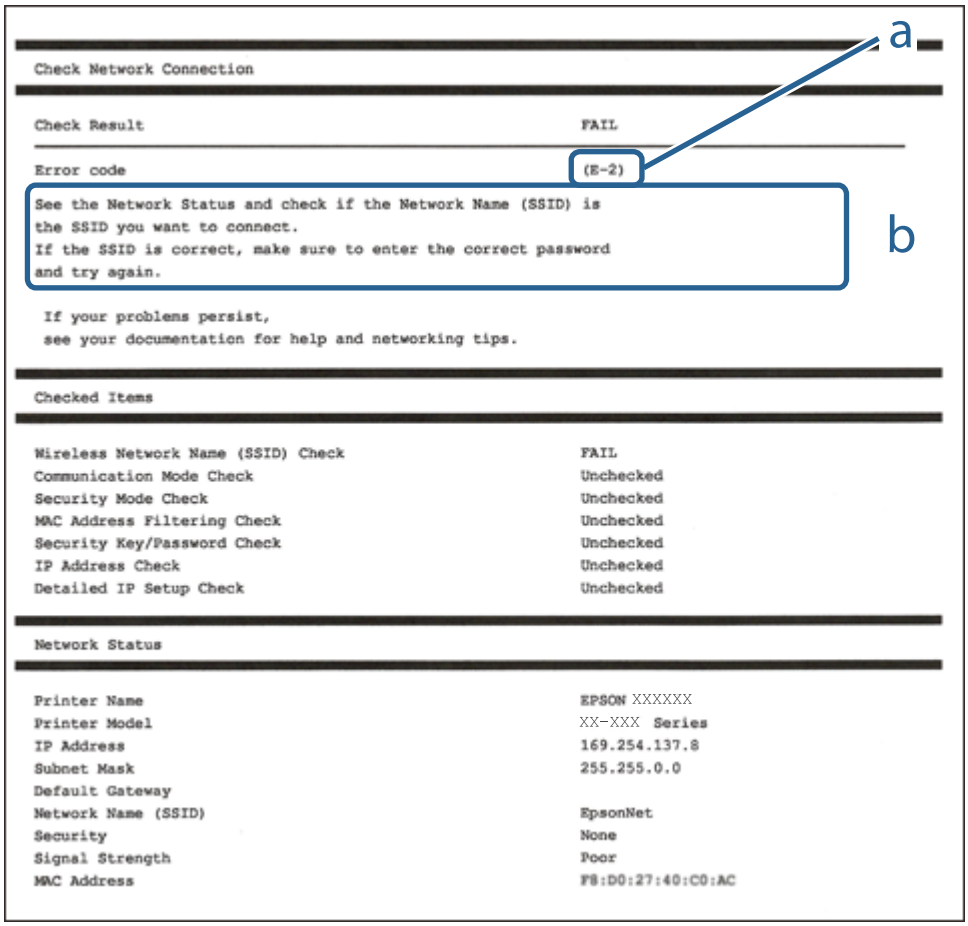

a. Error code

b. Messages on the Network Environment

Related Information

➡ “E-2, E-3, E-7” on page 24
➡ “E-5” on page 24
➡ “E-6” on page 25
➡ “E-8” on page 25
➡ “E-9” on page 26
➡ “E-10” on page 26
➡ “E-11” on page 27
➡ “E-12” on page 27
➡ “E-12” on page 27
➡ “Message on the Network Environment” on page 28

E-2, E-3, E-7

Message:

No wireless network names (SSID) found. Confirm that the router/access point is turned on and the wireless network (SSID) is set up correctly. Contact your network administrator for assistance.

No wireless network names (SSID) found. Confirm that the wireless network name (SSID) of the PC you wish to connect is set up correctly. Contact your network administrator for assistance.

Entered security key/password does not match the one set for your router/access point. Confirm security key/password. Contact your network administrator for assistance.

Solutions:

- ❏ Make sure your access point is turned on.
- ❏ Confirm that your computer or device is connected correctly to the access point.
- ❏ Turn off the access point. Wait for about 10 seconds, and then turn it on.
- ❏ Place the printer closer to your access point and remove any obstacles between them.
- ❏ If you have entered the SSID manually, check if it is correct. Check the SSID from the **Network Status** part on the network connection report.
- ❏ If you are using push button setup to establish a network connection, make sure your access point supports WPS. You cannot use push button setup if your access point does not support WPS.
- ❏ Makes sure your SSID uses only ASCII characters (alphanumeric characters and symbols). The printer cannot display an SSID that contains non-ASCII characters.
- ❏ Makes sure you know your SSID and password before connecting to the access point. If you are using an access point with its default settings, the SSID and password are located on a label on the access point. If you do not know your SSID and password, contact the person who set up the access point, or see the documentation provided with the access point.
- ❏ If you are connecting to an SSID generated from a tethering smart device, check for the SSID and password in the documentation provided with the smart device.
- ❏ If your Wi-Fi connection suddenly disconnects, check for the conditions below. If any of these conditions are applicable, reset your network settings by downloading and running the software from the following website.

  http://epson.sn > **Setup**

  - ❏ Another smart device was added to the network using push button setup.
  - ❏ The Wi-Fi network was set up using any method other than push button setup.

Related Information

➡ “Connecting to a Computer” on page 17

➡ “Making Wi-Fi Settings from the Printer” on page 18

E-5

Message:

Security mode (e.g. WEP, WPA) does not match the current setting of the printer. Confirm security mode. Contact your network administrator for assistance.

Solutions:

Make sure the access point's security type is set to one of the following. If it is not, change the security type on the access point, and then reset the printer's network settings.

- ❏ WEP-64 bit (40 bit)
- ❏ WEP-128 bit (104 bit)
- ❏ WPA PSK (TKIP/AES)*
- ❏ WPA2 PSK (TKIP/AES)*
- ❏ WPA (TKIP/AES)
- ❏ WPA2 (TKIP/AES)

* WPA PSK is also known as WPA Personal. WPA2 PSK is also known as WPA2 Personal.

E-6

Message:

MAC address of your printer may be filtered. Check whether your router/access point has restrictions such as MAC address filtering. See the documentation of the router/access point or contact your network administrator for assistance.

Solutions:

- ❏ Check if MAC address filtering is disabled. If it is enabled, register the printer's MAC address so that it is not filtered. See the documentation provided with the access point for details. You can check the printer's MAC address from the **Network Status** part on the network connection report.
- ❏ If your access point is using shared authentication with WEP security, make sure the authentication key and index are correct.

Related Information

➡ "Printing a Network Status Sheet" on page 29

E-8

Message:

Incorrect IP address is assigned to the printer. Confirm IP address setup of the network device (hub, router, or access point). Contact your network administrator for assistance.

Solutions:

- ❏ Enable DHCP on the access point if the printer's Obtain IP Address setting is set to **Auto**.
- ❏ If the printer's Obtain IP Address setting is set to Manual, the IP address you manually set is invalid due to out of range (for example: 0.0.0.0). Set a valid IP address from the printer's control panel or by using Web Config.

Related Information

➡ "Printing a Network Status Sheet" on page 29

E-9

Message:

Confirm the connection and network setup of the PC or other device. Connection using the EpsonNet Setup is available. Contact your network administrator for assistance.

Solutions:

Check the following.

❏ Devices are turned on.

❏ You can access the Internet and other computers or network devices on the same network from the devices you want to connect to the printer.

If still does not connect your printer and network devices after confirming the above, turn off the access point. Wait for about 10 seconds, and then turn it on. Then reset your network settings by downloading and running the installer from the following website.

http://epson.sn > **Setup**

Related Information

➡ "Connecting to a Computer" on page 17

E-10

Message:

Confirm IP address, subnet mask, and default gateway setup. Connection using the EpsonNet Setup is available. Contact your network administrator for assistance.

Solutions:

Check the following.

❏ Other devices on the network are turned on.

❏ Network addresses (IP address, subnet mask, and default gateway) are correct if you have set the printer's Obtain IP Address to Manual.

Reset the network address if they are incorrect. You can check the IP address, subnet mask, and default gateway from the **Network Status** part on the network connection report.

If DHCP is enabled, change the printer's Obtain IP Address setting to **Auto**. If you want to set the IP address manually, check the printer's IP address from the **Network Status** part on the network connection report, and then select Manual on the network settings screen. Set the subnet mask to [255.255.255.0].

If still does not connect your printer and network devices, turn off the access point. Wait for about 10 seconds, and then turn it on.

Related Information

➡ "Printing a Network Status Sheet" on page 29

E-11

Message:

Setup is incomplete. Confirm default gateway setup. Connection using the EpsonNet Setup is available. Contact your network administrator for assistance.

Solutions:

Check the following.

❏ The default gateway address is correct if you set the printer's TCP/IP Setup setting to Manual.

❏ The device that is set as the default gateway is turned on.

Set the correct default gateway address. You can check the default gateway address from the **Network Status** part on the network connection report.

Related Information

➡ "Printing a Network Status Sheet" on page 29

E-12

Message:

Confirm the following -Entered security key/password is correct -Index of the security key/password is set to the first number -IP address, subnet mask, or default gateway setup is correct Contact your network administrator for assistance.

Solutions:

Check the following.

❏ Other devices on the network are turned on.

❏ The network addresses (IP address, subnet mask, and default gateway) are correct if you are entering them manually.

❏ The network addresses for other devices (subnet mask and default gateway) are the same.

❏ The IP address does not conflict with other devices.

If still does not connect your printer and network devices after confirming the above, try the following.

❏ Turn off the access point. Wait for about 10 seconds, and then turn it on.

❏ Make network settings again using the installer. You can run it from the following website.

http://epson.sn > **Setup**

❏ You can register several passwords on an access point that uses WEP security type. If several passwords are registered, check if the first registered password is set on the printer.

Related Information

➡ "Printing a Network Status Sheet" on page 29

➡ "Connecting to a Computer" on page 17

E-13

Message:

Confirm the following -Entered security key/password is correct -Index of the security key/password is set to the first number -Connection and network setup of the PC or other device is correct Contact your network administrator for assistance.

Solutions:

Check the following.

❏ Network devices such as an access point, hub, and router are turned on.

❏ The TCP/IP Setup for network devices has not been set up manually. (If the printer's TCP/IP Setup is set automatically while the TCP/IP Setup for other network devices is performed manually, the printer's network may differ from the network for other devices.)

If it still does not work after checking the above, try the following.

❏ Turn off the access point. Wait for about 10 seconds, and then turn it on.

❏ Make network settings on the computer that is on the same network as the printer using the installer. You can run it from the following website.

http://epson.sn > **Setup**

❏ You can register several passwords on an access point that uses the WEP security type. If several passwords are registered, check if the first registered password is set on the printer.

Related Information

➡ "Printing a Network Status Sheet" on page 29

➡ "Connecting to a Computer" on page 17

Message on the Network Environment

Message	Solution
*Multiple network names (SSID) that match your entered network name (SSID) have been detected. Confirm network name (SSID).	The same SSID may be set on several access points. Check the settings on the access points, and change the SSID.
The Wi-Fi environment needs to be improved. Turn the wireless router off and then turn it on. If the connection does not improve, see the documentation for the wireless router.	After moving the printer closer to the access point and removing any obstacles between them, turn off the access point. Wait for about 10 seconds, and then turn it on. If it still does not connect, see the documentation supplied with the access point.
*No more devices can be connected. Disconnect one of the connected devices if you want to add another one.	You can simultaneously connect up to four computers and smart devices in Wi-Fi Direct (Simple AP) connection. To add another computer or smart device, disconnect one of the connected devices first.

Printing a Network Status Sheet

You can check the detailed network information by printing it.

1. Load papers.
2. Hold down the button on the printer's control panel for at least 10 seconds.

   The network status sheet is printed.

   Note:

   If you release the button within 10 seconds, a network connection report is printed.

Replacing or Adding New Access Points

If the SSID changes due to the replacement of an access point, or an access point is added and a new network environment is established, re-set the Wi-Fi settings.

Related Information

➡ "Changing the Connection Method to a Computer" on page 29

Changing the Connection Method to a Computer

Using the installer and re-set up in a different connection method.

❏ Setting up from the website

Access the following website, and then enter the product name. Go to **Setup**, and then start setting up.

http://epson.sn

❏ Setting up using the software disc (only for the models that come with a software disc and users with computers with disc drives.)

Insert the software disc into the computer, and then follow the on-screen instructions.

Selecting Change the Connection Methods

Follow the on-screen instructions until the following screen is displayed.

Select **Change or re-set the connection method** on the Select Software Installation screen, and then click **Next**.

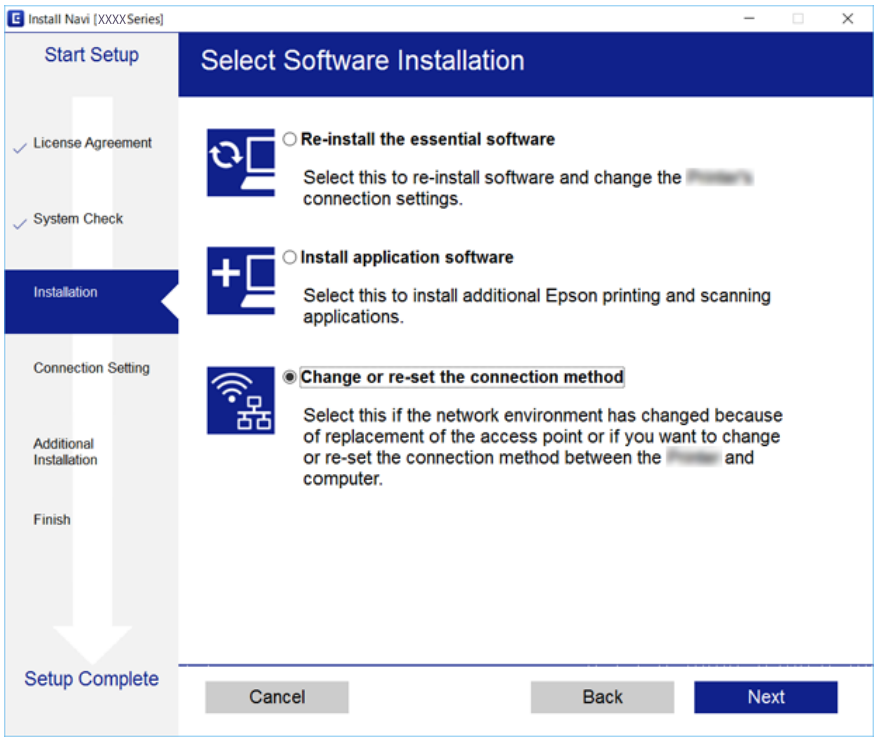

Restoring the Network Settings from the Control Panel

You can restore all network settings to their defaults.

1. Turn the printer off.
2. While holding down the button, press the button until the light and the light flash alternately.

   Restoration is complete when the light and the light are off.

Preparing the Printer

Loading Papers

Available Paper and Capacities

Epson recommends using genuine Epson paper to ensure high-quality printouts.

Genuine Epson Paper

Media Name	Size	Loading Capacity (Sheets)	Manual 2-Sided Printing	Borderless Printing
Epson Bright White Ink Jet Paper	A4	Up to the line indicated by the triangle symbol on the edge guide.*1	✓	✓
Epson Ultra Glossy Photo Paper	A4, 13×18 cm (5×7 in.), 10×15 cm (4×6 in.)	20*2	-	✓
Epson Premium Glossy Photo Paper	A4, 13×18 cm (5×7 in.), 16:9 wide size (102×181 mm), 10×15 cm (4×6 in.)	20*2	-	✓
Epson Premium Semigloss Photo Paper	A4, 10×15 cm (4×6 in.)	20*2	-	✓
Epson Photo Paper Glossy	A4, 13×18 cm (5×7 in.), 10×15 cm (4×6 in.)	20*2	-	✓
Epson Matte Paper-Heavyweight	A4	20	-	✓
Epson Double-Sided Matte Paper	A4	1	✓	✓
Epson Photo Quality Ink Jet Paper	A4	80	-	-

*1 For manual 2-sided printing, you can load up to 30 sheets for paper with one side already printed.

*2 Load one sheet of paper at a time if the paper does not feed correctly or if the printout has uneven colors or smears.

Note:
The availability of paper varies by location. For the latest information on paper available in your area, contact Epson support.

Commercially Available Paper

Media Name	Size	Loading Capacity (Sheets or Envelopes)	Manual 2-Sided Printing	Borderless Printing
Plain paper Copy paper Letterhead*3	Letter, A4	Up to the line indicated by the triangle symbol on the edge guide.*2	✓	✓
	B5, 16K (195×270 mm)	Up to the line indicated by the triangle symbol on the edge guide.*2	✓	-
	A5, A6, B6	Up to the line indicated by the triangle symbol on the edge guide.*2	✓	-
	Legal, Indian-Legal, 8.5×13 in.	1	✓	-
	User Defined*1 (mm) 54×86 to 215.9×1200	1	✓	-
Envelope	Envelope #10, Envelope DL, Envelope C6	10	-	-

*1 Only printing from computer or smart device is available.

*2 For manual 2-sided printing, you can load up to 30 sheets for paper with one side already printed.

*3 Paper on which information such as the sender's name or corporation name are pre-printed in the header. There must be a margin of 3 mm or more at the top of the paper. 2-sided printing, borderless printing, and copying are not available for letterhead paper.

Paper Handling Precautions

❏ Read the instruction sheets supplied with the paper.

❏ Fan and align the edges of the paper before loading. Do not fan or curl photo paper. Doing so may damage the printable side.

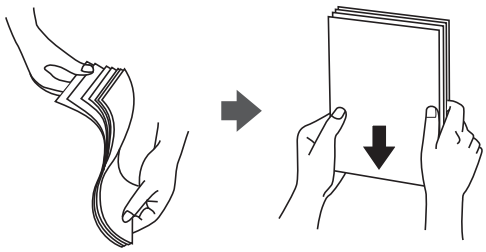

❏ If the paper is curled, flatten it or curl it slightly in the opposite direction before loading. Printing on curled paper may cause paper jams and smears on the printout.



❏ Do not use paper that is wavy, torn, cut, folded, damp, too thick, too thin, or paper that has stickers stuck to it. Using these types of paper causes paper jams and smears on the printout.

❏ Make sure you are using long-grain paper. If you are not sure what type of paper you are using, check the paper packaging or contact the manufacturer to confirm the paper specifications.

Related Information

➡ "Printer Specifications" on page 127

Loading Paper in the Rear Paper Feed

1. Open the feeder guard and pull out the paper support.

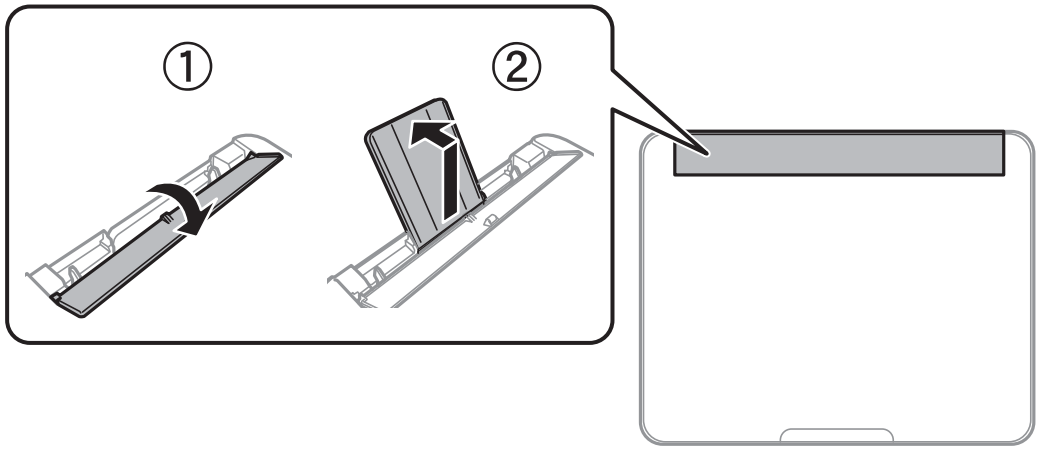

2. Slide the edge guides.

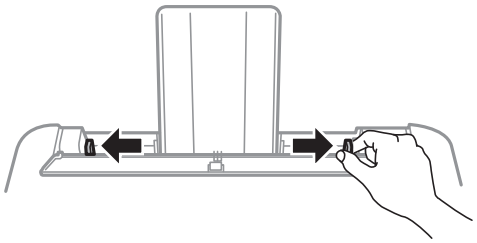

3. Load paper at the center of the paper support with the printable side facing up.

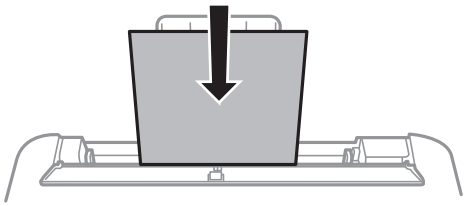

Important:

❏ *Do not load more than the maximum number of sheets specified for the paper. For plain paper, do not load above the line just under the ▼ symbol inside the edge guide.*

❏ *Load paper short edge first. However, when you have set the long edge as the width of the user defined size, load paper long edge first.*

❏ Pre-punched paper

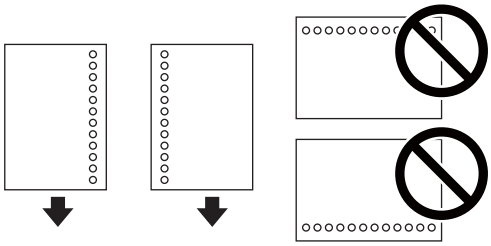

Note:

❏ *Load a single sheet of defined size plain paper with binding holes at the left or right.*

❏ *Adjust the print position of your file to avoid printing over the holes.*

4. Slide the edge guides to the edges of the paper, and then close the feeder guard.

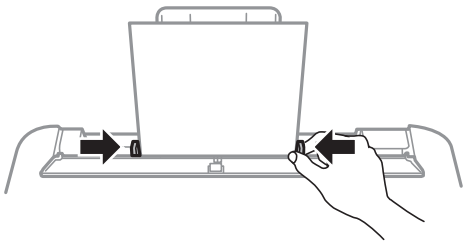

Important:

Do not place objects on the feeder guard. Doing so may prevent paper from feeding.

5. Slide out the output tray.

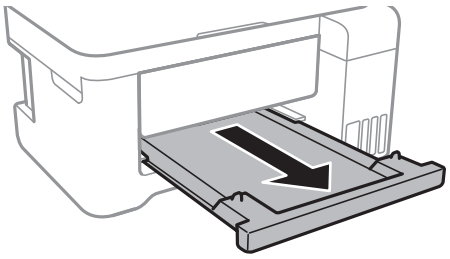

Note:

- ❏ *Return the remaining paper to its package. If you leave it in the printer, the paper may curl or the print quality may decline.*
- ❏ *For letterhead paper, select **Letterhead** as the paper type.*
- ❏ *For letterhead paper, if you print on paper that is smaller than the setting in the printer driver, the printer may print beyond the edges of the paper which can lead to ink smears on your printouts and excess ink building up inside the printer. Make sure you select the correct paper size setting.*
- ❏ *2-sided printing, borderless printing, and copying are not available for letterhead paper. Also, the print speed may be slower.*

Related Information

➡ "Paper Handling Precautions" on page 32

➡ "Available Paper and Capacities" on page 31

➡ "List of Paper Type" on page 36

➡ "Loading Envelopes and Precautions" on page 35

➡ "Loading Long Papers" on page 36

Loading Envelopes and Precautions

Loading envelopes short edge first at the center with the flap facing down, and slide the edge guides to the edges of the envelopes.

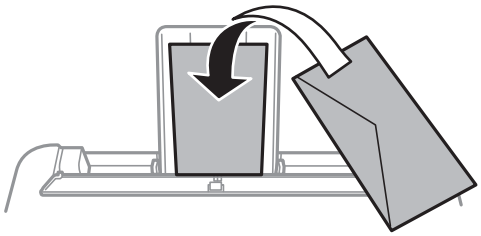

- ❏ Fan and align the edges of the envelopes before loading. When the stacked envelopes are puffed up with air, press them down to flatten them before loading.

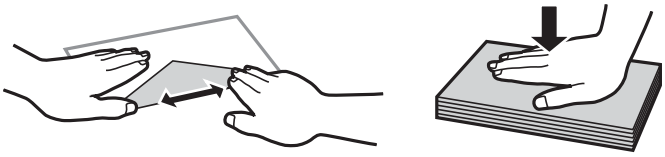

❏ Do not use envelopes that are curled or folded. Using these envelopes causes paper jams and smears on the printout.

❏ Do not use envelopes with adhesive surfaces on the flaps or window envelopes.

❏ Avoid using envelopes that are too thin, as they may curl during printing.

Related Information

➡ “Available Paper and Capacities” on page 31

➡ “Loading Paper in the Rear Paper Feed” on page 33

Loading Long Papers

When loading paper longer than legal size, store the paper support and the output tray, and then flatten the leading edge of the paper.

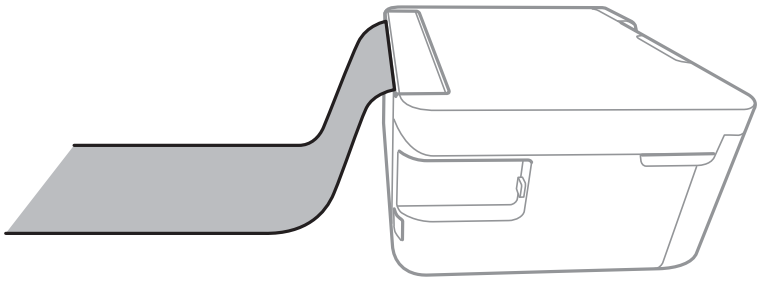

Related Information

➡ “Available Paper and Capacities” on page 31

➡ “Loading Paper in the Rear Paper Feed” on page 33

List of Paper Type

To obtain optimum printing results, select the paper type that suits the paper.

Media Name	Media Type
Epson Bright White Ink Jet Paper	Plain paper
Epson Ultra Glossy Photo Paper	Epson Ultra Glossy
Epson Premium Glossy Photo Paper	Epson Premium Glossy
Epson Premium Semigloss Photo Paper	Epson Premium Semigloss
Epson Photo Paper Glossy	Photo Paper Glossy
Epson Matte Paper-Heavyweight Epson Double-Sided Matte Paper Epson Photo Quality Ink Jet Paper	Epson Matte

Placing Originals

Placing Originals on the Scanner Glass

> ***Important:***
> *When placing bulky originals such as books, prevent exterior light from shining directly onto the scanner glass.*

1. Open the document cover.

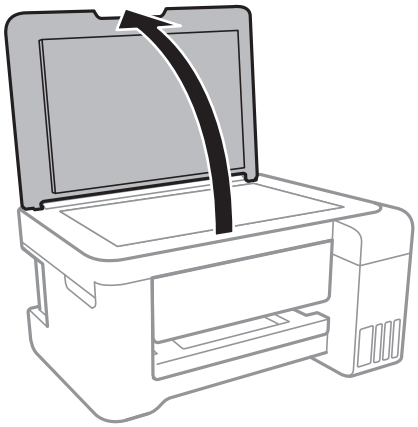

2. Remove any dust or stains on the scanner glass.

3. Place the original face-down and slide it to the corner mark.

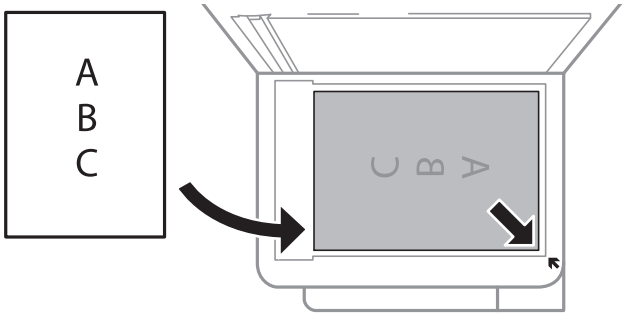

Note:
A range of 1.5 mm from the bottom edge and right edge of the scanner glass is not scanned.

4. Close the cover gently.

> ***Important:***
> *Do not apply too much force to the scanner glass or the document cover. Otherwise, they may be damaged.*

5. Remove the originals after scanning.

Note:
If you leave the originals on the scanner glass for a long time, they may stick to the surface of the glass.

Saving Power

The printer enters sleep mode or turns off automatically if no operations are performed for a set period. You can adjust the time before power management is applied. Any increase will affect the product's energy efficiency. Please consider the environment before making any change.

Depending on the location of purchase, the printer may have a feature that turns it off automatically if it is not connected to the network for a specified amount of time.

https://www.epson.eu/energy-consumption

Saving Power - Windows

1. Access the printer driver window.
2. Click **Printer and Option Information** on the **Maintenance** tab.
3. Do one of the following.
   - ❏ Select the time period before the printer enters sleep mode as the **Sleep Timer** setting, and click **Send**. To make the printer turn off automatically, select the time period as the **Power Off Timer** setting, and click **Send**.
   - ❏ Select the time period before the printer enters sleep mode as the **Sleep Timer** setting, and click **Send**. To make the printer turn off automatically, select the time period in the **Power Off If Inactive** or **Power Off If Disconnected** setting, and then click **Send**.

   Note:
   *Your product may have the **Power Off Timer** feature or Power Off If Disconnected and **Power Off If Disconnected** features depending on the location of purchase.*
4. Click **OK**.

Saving Power - Mac OS

1. Select **System Preferences** from the menu > **Printers & Scanners** (or **Print & Scan**, **Print & Fax**), and then select the printer.
2. Click **Options & Supplies** > **Utility** > **Open Printer Utility**.
3. Click **Printer Settings**.
4. Do one of the following.
   - ❏ Select the time period before the printer enters sleep mode as the **Sleep Timer** setting, and click **Apply**. To make the printer turn off automatically, select the time period as the **Power Off Timer** setting, and click **Apply**.
   - ❏ Select the time period before the printer enters sleep mode as the **Sleep Timer** setting, and click **Apply**. To make the printer turn off automatically, select the time period in the **Power Off If Inactive** or **Power Off If Disconnected** setting, and then click **Apply**.

Note:
Your product may have the ***Power Off Timer*** *feature or* ***Power Off If Inactive*** *and* ***Power Off If Disconnected*** *features depending on the location of purchase.*

Printing

Printing from the Printer Driver on Windows

Accessing the Printer Driver

When accessing the printer driver from the computer's control panel, the settings are applied to all of the applications.

Accessing the printer driver from the control panel

❏ Windows 10/Windows Server 2016

Right-click the start button or press and hold it, and then select **Control Panel** > **View devices and printers** in **Hardware and Sound**. Right-click on your printer, or press and hold it and then select **Printing preferences**.

❏ Windows 8.1/Windows 8/Windows Server 2012 R2/Windows Server 2012

Select **Desktop** > **Settings** > **Control Panel** > **View devices and printers** in **Hardware and Sound**. Right-click on your printer, or press and hold it and then select **Printing preferences**.

❏ Windows 7/Windows Server 2008 R2

Click the start button, and select **Control Panel** > **View devices and printers** in **Hardware and Sound**. Right-click on your printer and select **Printing preferences**.

❏ Windows Vista/Windows Server 2008

Click the start button, and select **Control Panel** > **Printers** in **Hardware and Sound**. Right-click on your printer and select **Select printing preferences**.

❏ Windows XP/Windows Server 2003 R2/Windows Server 2003

Click the start button, and select **Control Panel** > **Printers and Other Hardware** > **Printers and Faxes**. Right-click on your printer and select **Printing preferences**.

Accessing the printer driver from the printer icon on the task bar

The printer icon on the desktop task bar is a shortcut icon allowing you to quickly access the printer driver.

If you click the printer icon and select **Printer Settings**, you can access the same printer settings window as the one displayed from the control panel. If you double-click this icon, you can check the status of the printer.

Note:
If the printer icon is not displayed on the task bar, access the printer driver window, click ***Monitoring Preferences*** *on the* ***Maintenance*** *tab, and then select* ***Register the shortcut icon to the taskbar****.*

Printing Basics

Note:
Operations may differ depending on the application. See the application's help for details.

1. Open the file you want to print.

   Load paper in the printer if it has not already been loaded.

2. Select **Print** or **Page Setup** from the **File** menu.

3. Select your printer.

4. Select **Preferences** or **Properties** to access the printer driver window.

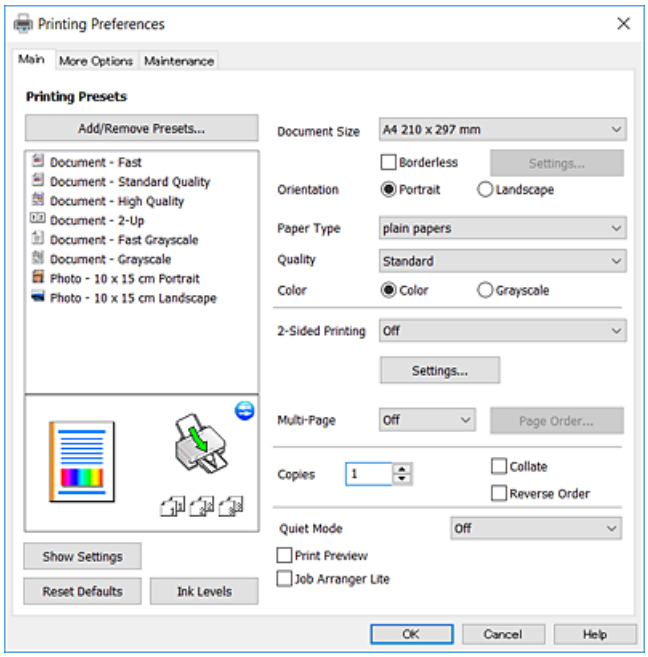

5. Change the settings as necessary.

   See the menu options for the printer driver for details.

   Note:
   - ❏ *You can also see the online help for explanations of the setting items. Right-clinking an item displays **Help**.*
   - ❏ *When you select **Print Preview**, you can see a preview of your document before printing.*

6. Click **OK** to close the printer driver window.

7. Click **Print**.

   Note:
   *When you select **Print Preview**, a preview window is displayed. To change the settings, click **Cancel**, and then repeat the procedure from step 2.*

Related Information

➡ “Available Paper and Capacities” on page 31

➡ “Loading Paper in the Rear Paper Feed” on page 33

➡ “Main Tab” on page 56

Printing on 2-Sides

You can print on both sides of the paper. You can also print a booklet that can be created by re-ordering the pages and folding the printout.

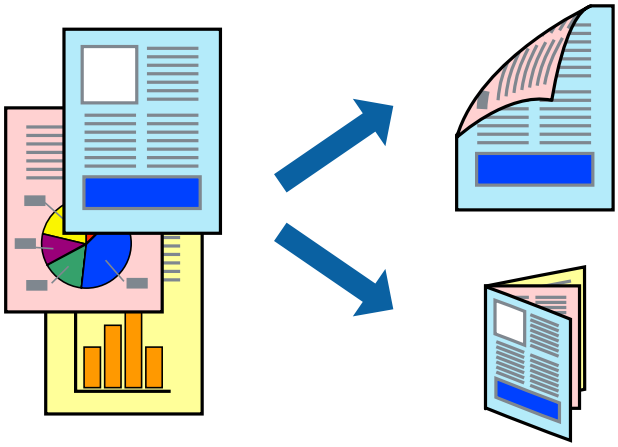

Note:

- ❏ *This feature is not available for borderless printing.*
- ❏ *Flip the paper over to print on the other side when the printer has finished printing the first side.*
- ❏ *If you do not use paper that is suitable for 2-sided printing, the print quality may decline and paper jams may occur.*
- ❏ *Depending on the paper and the data, ink may bleed through to the other side of the paper.*

Related Information

➡ "Available Paper and Capacities" on page 31

Print Settings

2-sided printing is available when EPSON Status Monitor 3is enabled. However, it may not be available when the printer is accessed over a network or is used as a shared printer.

Note:
*To enable EPSON Status Monitor 3, click **Extended Settings** on the **Maintenance** tab, and then select **Enable EPSON Status Monitor 3**.*

1. On the printer driver's **Main** tab, select an option from **2-Sided Printing**.
2. Click **Settings**, make the appropriate settings, and then click **OK**.

   Note:
   *To print a folded booklet, select **Booklet**.*
3. Click **Print**.

   When the first side has finished printing, a pop-up window is displayed on the computer. Follow the on-screen instructions.

Related Information

➡ "Printing Basics" on page 40

➡ “Main Tab” on page 56

Printing Several Pages on One Sheet

You can print two or four pages of data on a single sheet of paper.

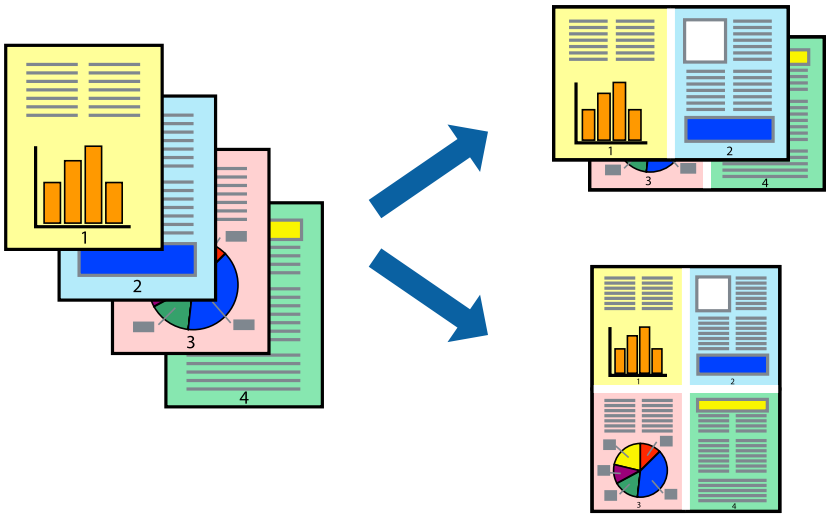

Print Settings

On the printer driver's **Main** tab, select **2-Up** or **4-Up** as the **Multi-Page** setting.

Note:
This feature is not available for borderless printing.

Related Information

➡ “Printing Basics” on page 40

➡ “Main Tab” on page 56

Printing and Stacking in Page Order (Reverse Order Printing)

You can print from the last page so that the documents are stacked in page order.

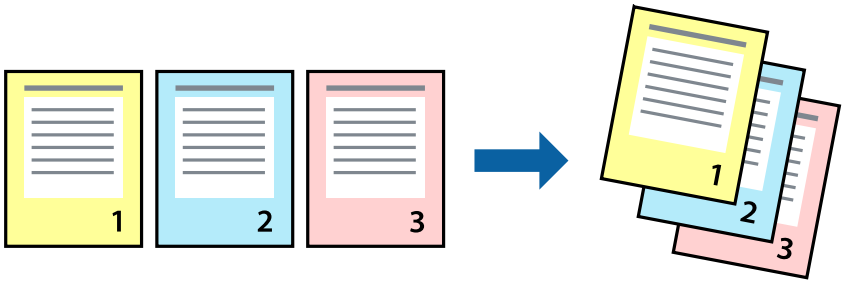

Print Settings

On the printer driver's **Main** tab, select **Reverse Order**.

Related Information

➡ “Printing Basics” on page 40

➡ “Main Tab” on page 56

Printing a Reduced or Enlarged Document

You can reduce or enlarge the size of a document by a specific percentage or to fit the paper size you loaded in the printer.

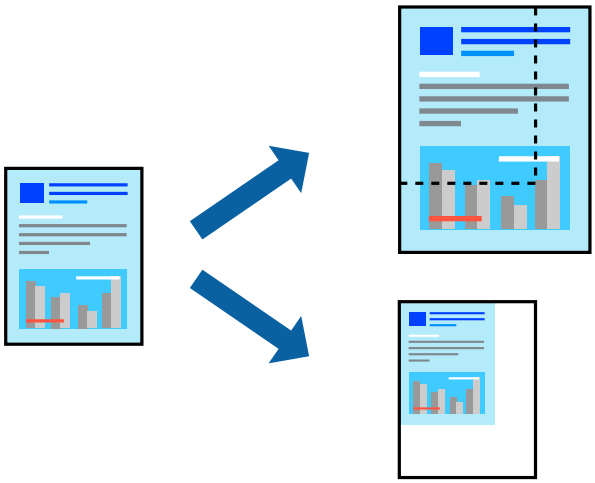

Print Settings

On the printer driver's **More Options** tab, select the document size from the **Document Size** setting. Select the paper size you want to print on from the **Output Paper** setting. Select **Reduce/Enlarge Document**, and then select **Fit to Page** or **Zoom to**. When you select **Zoom to**, enter a percentage.

Select **Center** to print the images in the center of the page.

Note:
This feature is not available for borderless printing.

Related Information

➡ “Printing Basics” on page 40

➡ “More Options Tab” on page 57

Printing One Image on Multiple Sheets for Enlargement (Creating a Poster)

This feature allows you to print one image on multiple sheets of paper. You can create a larger poster by taping them together.

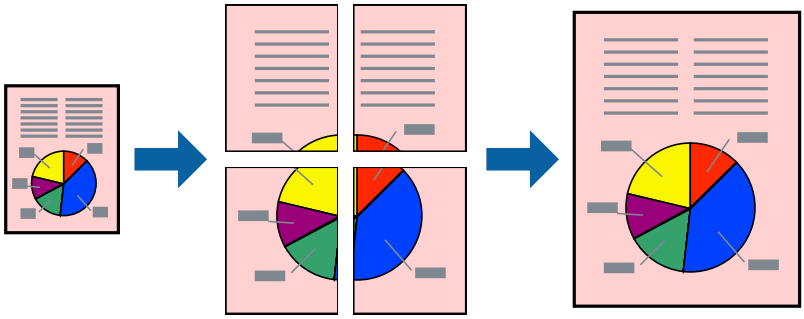

Note:
This feature is not available for borderless printing.

Print Settings

On the printer driver's **Main** tab, select **2x1 Poster**, **2x2 Poster**, **3x3 Poster**, or **4x4 Poster** as the **Multi-Page** setting. If you click **Settings**, you can select the panels that you do not want to print. You can also select the cutting guide options.

Related Information

➡ "Printing Basics" on page 40

➡ "Main Tab" on page 56

Making Posters Using Overlapping Alignment Marks

Here is an example of how to make a poster when **2x2 Poster** is selected, and **Overlapping Alignment Marks** is selected in **Print Cutting Guides**.

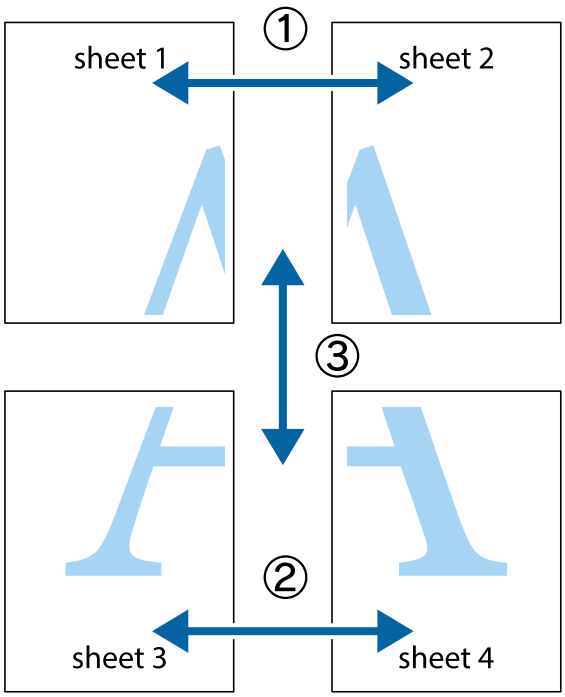

1. Prepare Sheet 1 and Sheet 2. Cut off the margins of Sheet 1 along the vertical blue line through the center of the top and bottom cross marks.

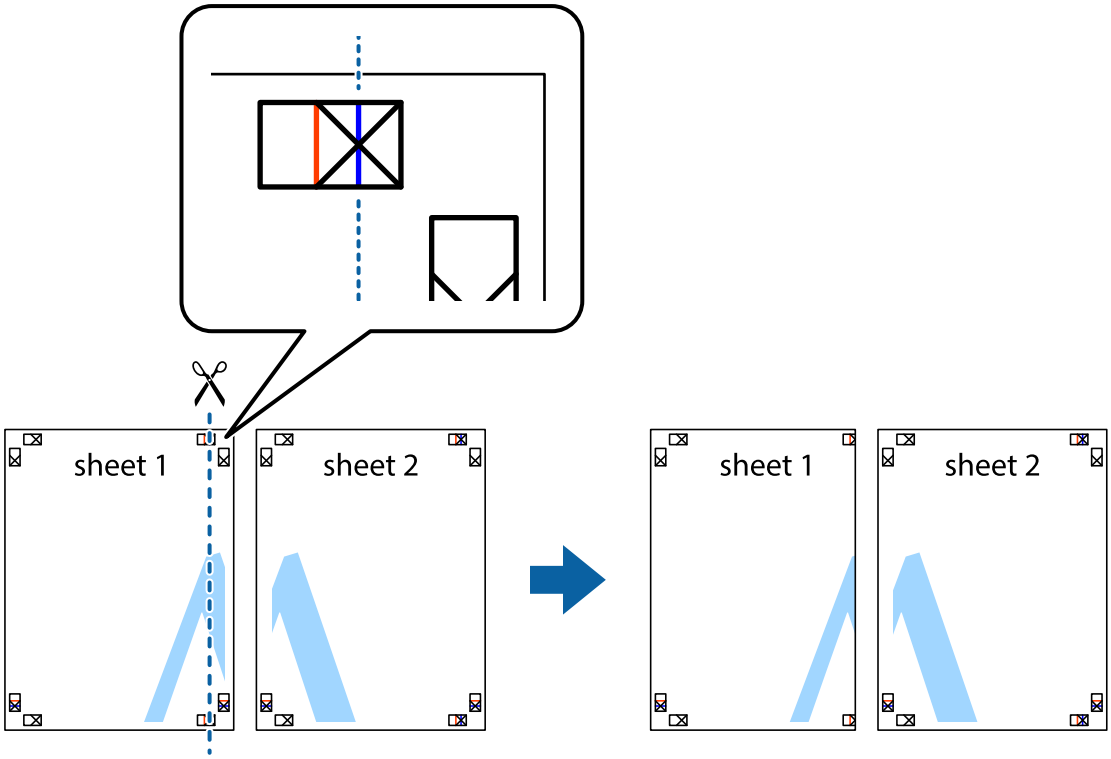

2. Place the edge of Sheet 1 on top of Sheet 2 and align the cross marks, then temporarily tape the two sheets together from the back.

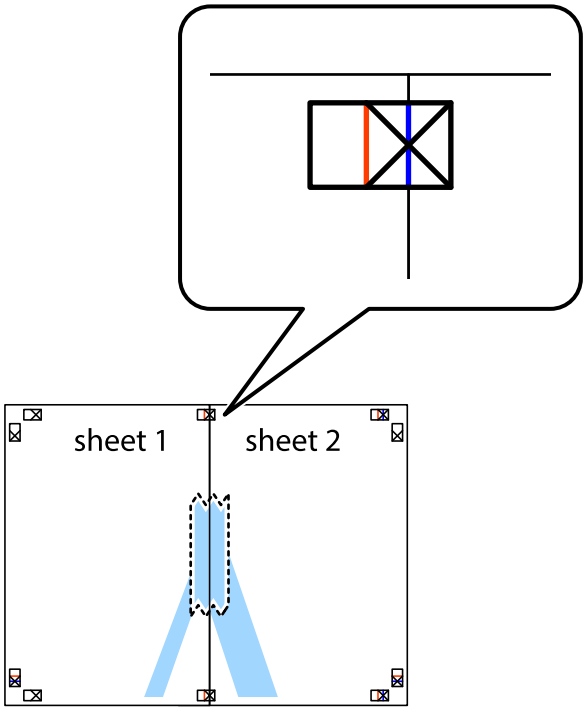

3. Cut the taped sheets in two along the vertical red line through the alignment markers (this time, the line to the left of the cross marks).

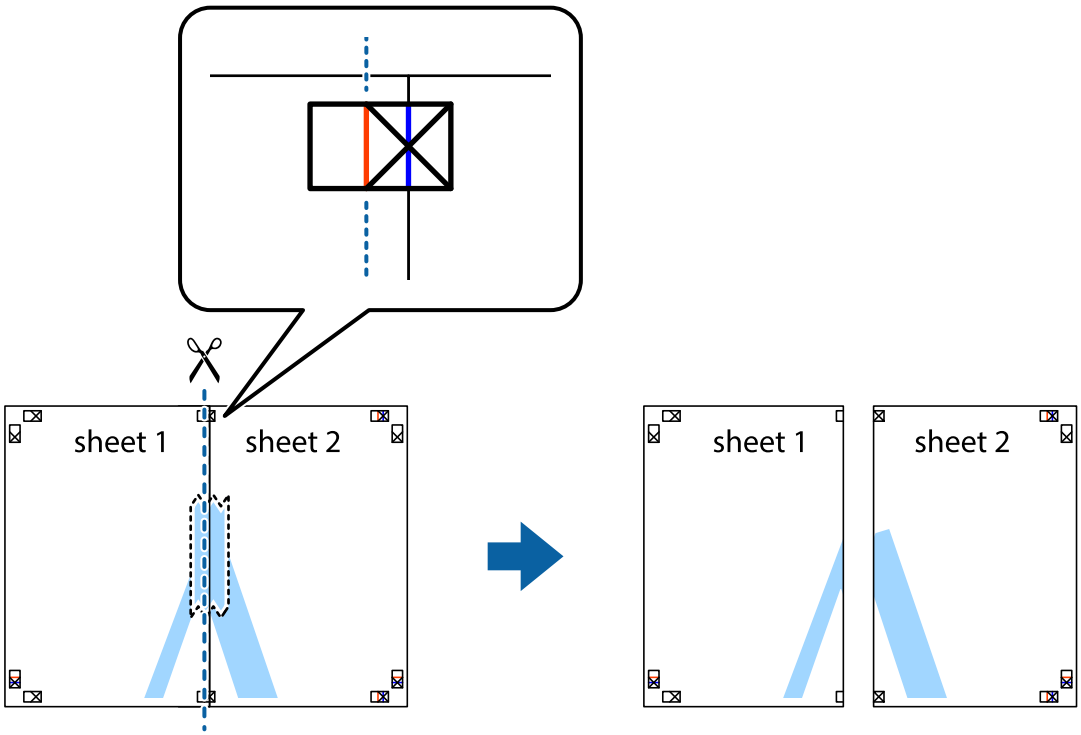

4. Tape the sheets together from the back.

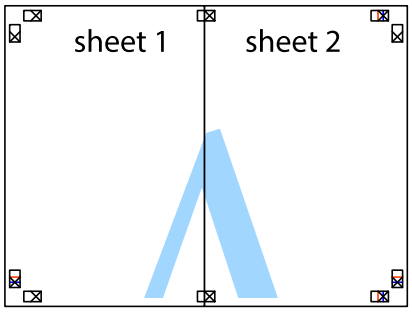

5. Repeat steps 1 to 4 to tape Sheet 3 and Sheet 4 together.

6. Cut off the margins of Sheet 1 and Sheet 2 along the horizontal blue line through the center of the left and right side cross marks.

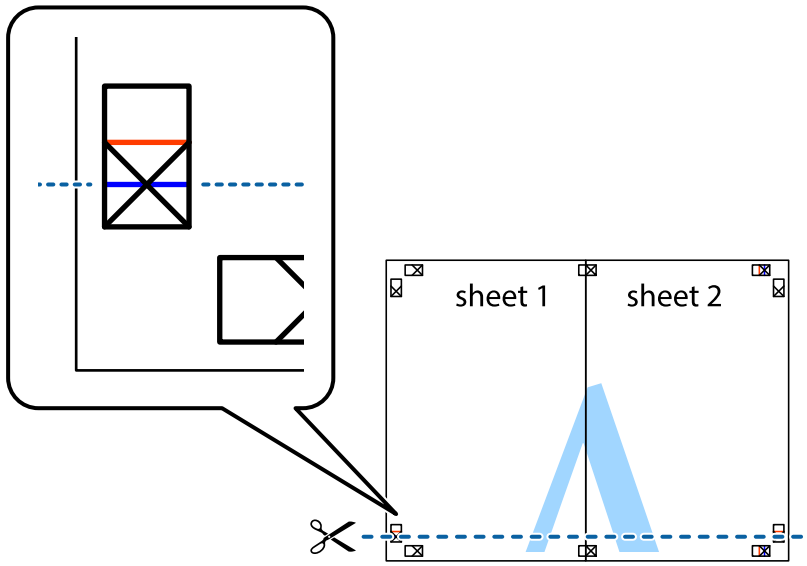

7. Place the edge of Sheet 1 and Sheet 2 on top of Sheet 3 and Sheet 4 and align the cross marks, and then temporarily tape them together from the back.

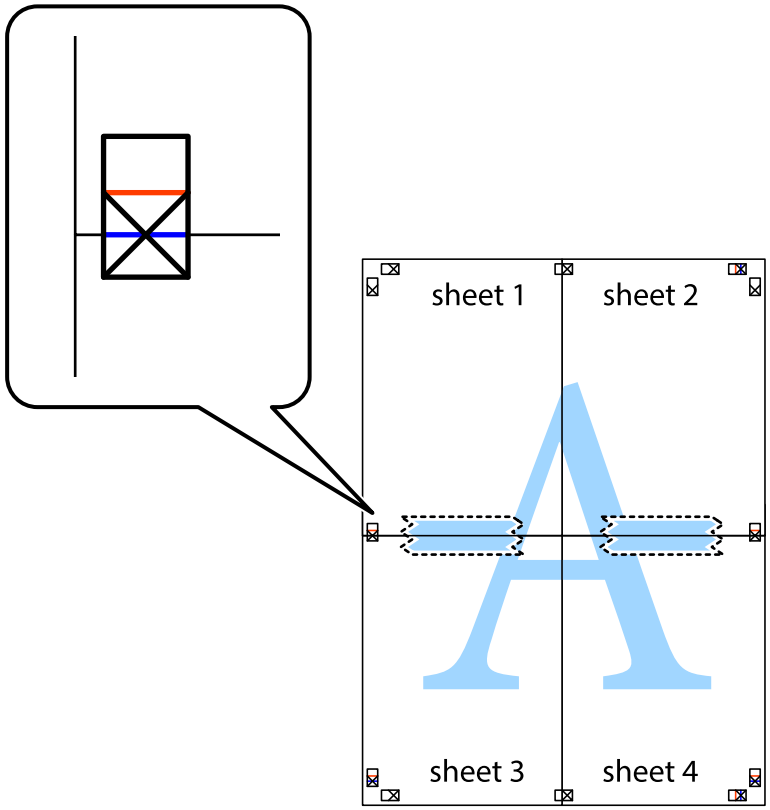

8. Cut the taped sheets in two along the horizontal red line through the alignment markers (this time, the line above the cross marks).

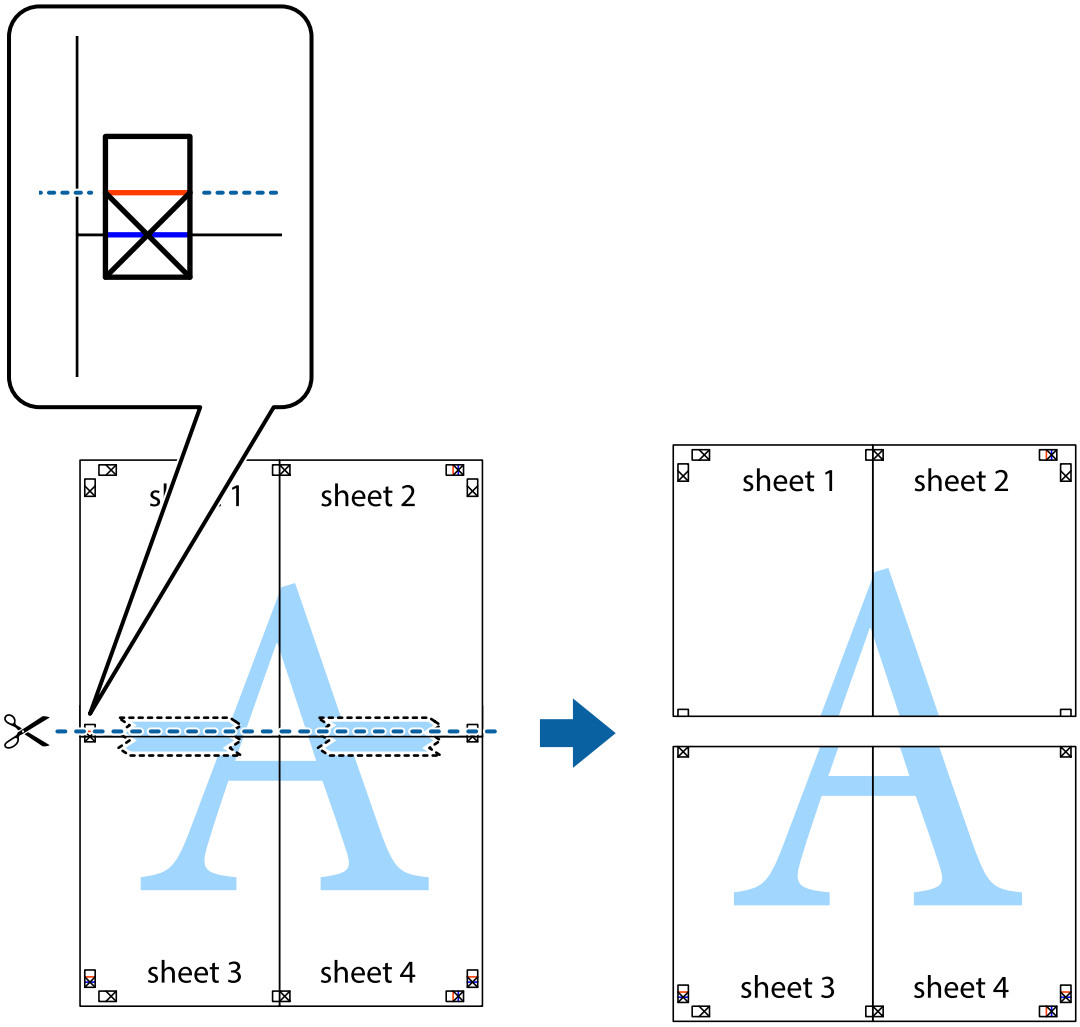

9. Tape the sheets together from the back.

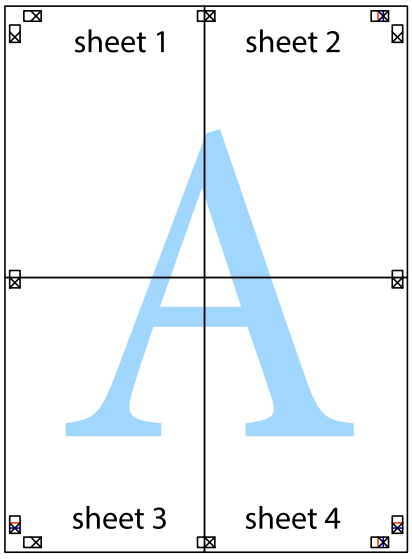

10. Cut off the remaining margins along the outer guide.

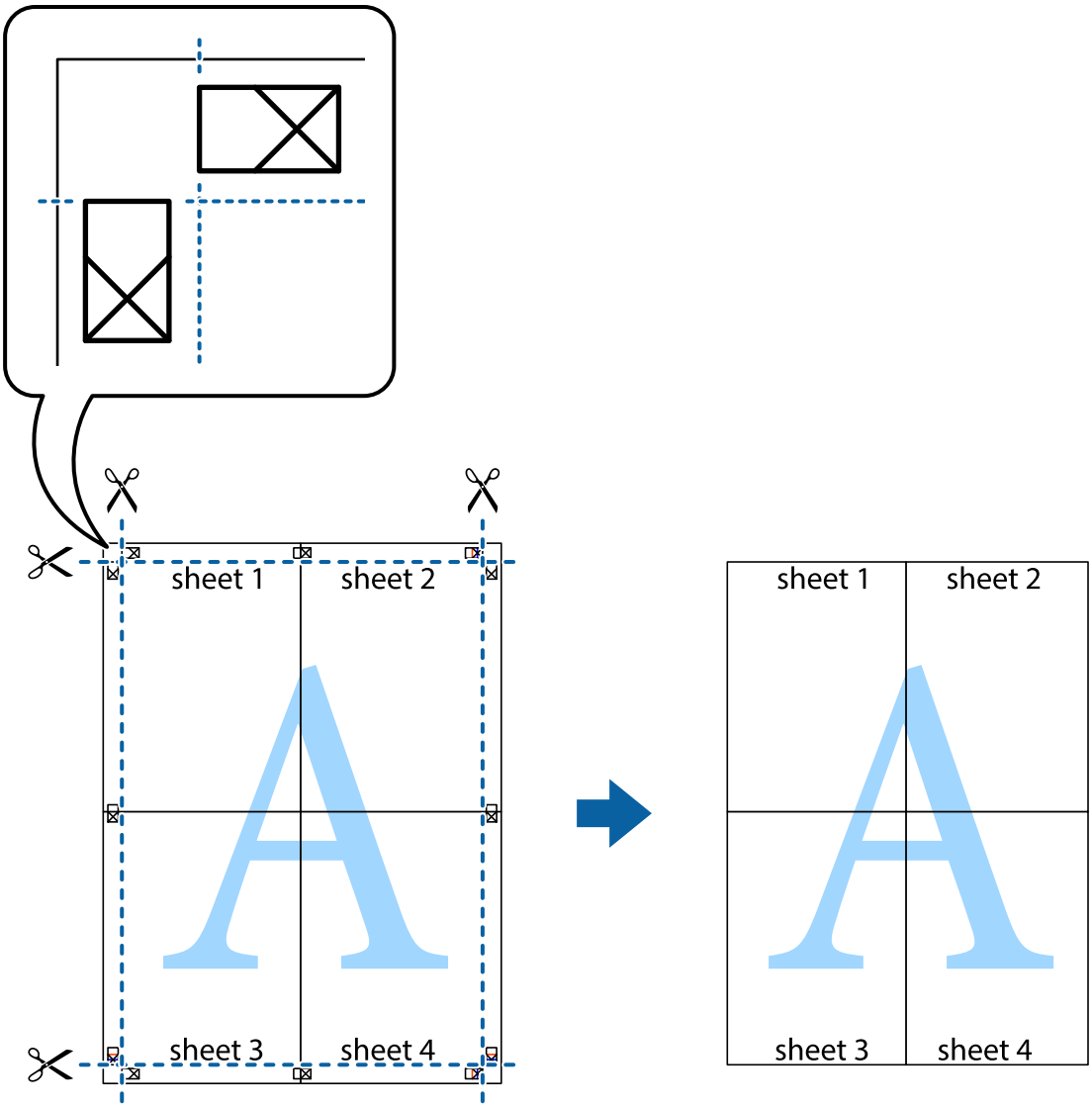

Printing with a Header and Footer

You can print information such as a user name and printing date in headers or footers.

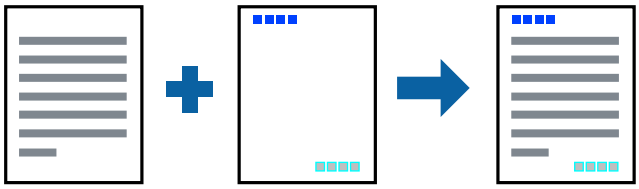

Print Settings

On the printer driver's **More Options** tab, click **Watermark Features**, and then select **Header/Footer**. Click **Settings**, and the select the items you want to print.

Related Information

➡ “Printing Basics” on page 40

➡ “More Options Tab” on page 57

Printing a Watermark

You can print a watermark such as "Confidential" on your printouts. You can also add your own watermark.

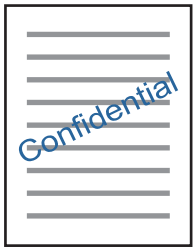

Note:
This feature is not available with borderless printing.

Print Settings

On the printer driver's **More Options** tab, click **Watermark Features**, and then select Watermark. Click **Settings** to change details such as the size, density, or position of the watermark.

Related Information

➡ “Printing Basics” on page 40

➡ “More Options Tab” on page 57

Printing Multiple Files Together

Job Arranger Lite allows you to combine several files created by different applications and print them as a single print job. You can specify the print settings for combined files, such as multi-page layout, and 2-sided printing.

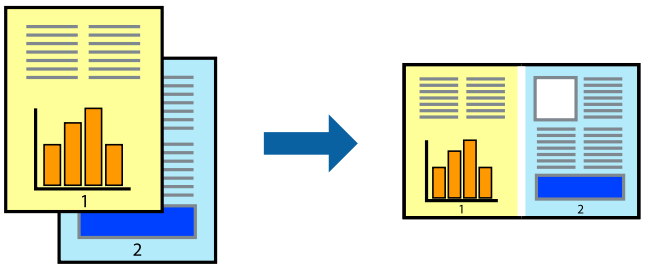

Print Settings

On the printer driver's **Main** tab, select **Job Arranger Lite**. When you start printing, the Job Arranger Lite window is displayed. With the Job Arranger Lite window opened, open the file that you want to combine with the current file, and then repeat the above steps.

When you select a print job added to Print Project in the Job Arranger Lite window, you can edit the page layout.

Click **Print** from the **File** menu to start printing.

Note:
*If you close the Job Arranger Lite window before adding all the print data to the Print Project, the print job you are currently working on is canceled. Click **Save** from the **File** menu to save the current job. The extension of the saved files is "ecl".*

*To open a Print Project, click **Job Arranger Lite** on the printer driver's **Maintenance** tab to open the Job Arranger Lite window. Next, select **Open** from the **File** menu to select the file.*

Related Information

➡ "Printing Basics" on page 40

➡ "Main Tab" on page 56

Printing Using the Color Universal Print Feature

You can enhance the visibility of texts and images in printouts.

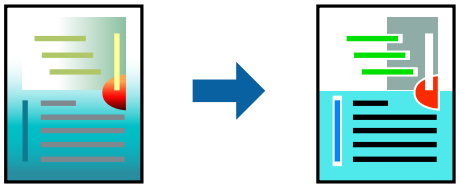

Color Universal Print is only available when the following settings are selected.

❏ Paper Type: Plain paper

❏ Quality: **Standard** or a higher quality

❏ Print Color: **Color**

❏ Applications: Microsoft® Office 2007 or later

❏ Text Size: 96 pts or smaller

Print Settings

On the printer driver's **More Options** tab, click **Image Options** in the **Color Correction** setting. Select an option from the **Color Universal Print** setting. Click **Enhancement Options** to make further settings.

Note:

❏ *Certain characters may be altered by patterns, such as "+" appearing as "±".*

❏ *Application-specific patterns and underlines may alter content printed using these settings.*

❏ *Print quality may decrease in photos and other images when using Color Universal Print settings.*

❏ *Printing is slower when using Color Universal Print settings.*

Related Information

➡ "Printing Basics" on page 40

➡ "More Options Tab" on page 57

Adjusting the Print Color

You can adjust the colors used in the print job.

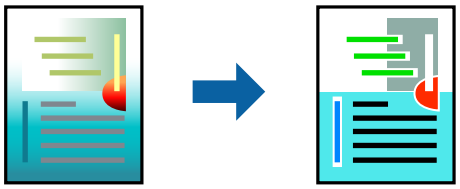

Note:
These adjustments are not applied to the original data.

Print Settings

On the printer driver's **More Options** tab, select **Custom** as the **Color Correction** setting. Click Advanced to open the **Color Correction** window, and then select the method of color correction.

Note:

- ***Automatic*** *is selected as default on the* ***More Options*** *tab. With this setting, the colors are automatically adjusted to match the paper type and print quality settings.*
- ***PhotoEnhance*** *on the* ***Color Correction*** *window adjusts the color by analyzing the location of the subject. Therefore, if you have changed the location of the subject by reducing, enlarging, cropping, or rotating the image, the color may change unexpectedly. Selecting the borderless setting also changes the location of the subject resulting in changes in color. If the image is out of focus, the tone may be unnatural. If the color is changed or becomes unnatural, print in a mode other than* ***PhotoEnhance****.*

Related Information

➡ “Printing Basics” on page 40

➡ “More Options Tab” on page 57

Printing to Emphasize Thin Lines

You can thicken thin lines that are too thin to print.

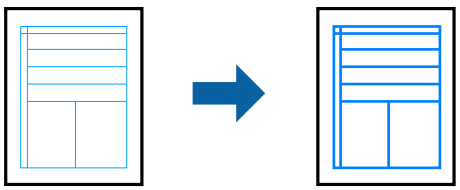

Print Settings

On the printer driver's **More Options** tab, click **Image Options** in the **Color Correction** setting. Select **Emphasize Thin Lines**.

Related Information

➡ “Printing Basics” on page 40

➡ “More Options Tab” on page 57

Printing Clear Bar Codes

You can print a bar code clearly and make it easy to scan. Only enable this feature if the bar code you printed cannot be scanned.

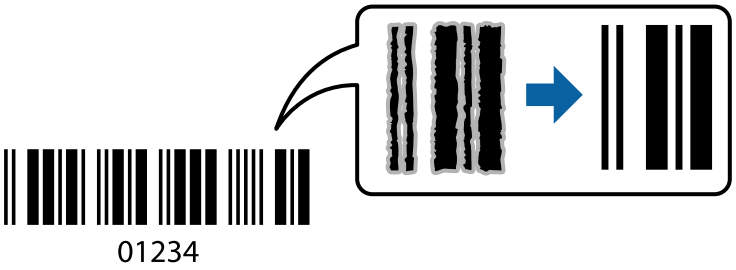

You can use this feature under the following conditions.

❏ Paper: Plain paper, Copy paper, or Envelope

❏ Quality: **Standard**, **Standard-Vivid**

The print quality may be changed when printing. The print speed may become slower and print density may become higher.

Note:
Deblurring may not always be possible depending on the circumstances.

Print Settings

On the printer driver's **Maintenance** tab, click **Extended Settings**, and then select **Barcode mode**.

Related Information

➡ “Printing Basics” on page 40

➡ “Maintenance Tab” on page 57

Canceling Printing

You can cancel a print job from the computer. However, you cannot cancel a print job from the computer once it has been completely sent to the printer. In this case, cancel the print job by using the printer's control panel.

Canceling

On your computer, right-click on your printer in **Devices and Printers**, **Printer**, or in **Printers and Faxes**. Click **See what's printing**, right-click on the job you want to cancel, and then select **Cancel**.

Menu Options for the Printer Driver

Open the print window in an application, select the printer, and then access the printer driver window.

Note:
Menus vary depending on the option you selected.

Main Tab

Printing Presets	Add/Remove Presets	You can add or remove your own presets for frequently used print settings. Select the preset you want to use from the list.
Show Settings	Displays a list of items currently set on the **Main** and **More Options** tabs.	
Reset Defaults	Return all settings to their factory default values. The settings on the **More Options** tab are also reset to their defaults.	
Ink Levels	Displays the approximate ink levels.	
Paper Source	Select the paper source from which the paper is fed. Select **Auto Select** to automatically select the paper source selected in the print settings on the printer's control panel. If the printer has only one paper source, this item is not displayed.	
Document Size	Select the paper size on which you want to print. If you select **User-Defined**, enter the paper width and height.	
Borderless	Enlarges the print data slightly more than the paper size so that no margins are printed around the edges of the paper. Click **Settings** to select the amount of enlargement.	
Orientation	Select the orientation you want to use to print.	
Paper Type	Select the type of paper on which you print.	
Quality	Select the pint quality you want to use for printing. Available settings depend on the paper type you select. Click **More Settings** to make further settings.	
Color	Select the color for your print job.	
2-Sided Printing	Allows you to perform 2-sided printing.	
	Settings	You can specify the binding edge and the binding margins. When printing multi-page documents, you can select to print starting from either the front or the back side of the page.
Multi-Page	Allows you to print several pages on one sheet or perform poster printing. Click **Page Order** to specify the order in which pages are printed.	
Copies	Set the number of copies you want to print.	
	Collate	Prints multi-page documents collated in order and sorted into sets.
	Reverse Order	Allows you to print from the last page so that the pages are stacked in the correct order after printing.
Quiet Mode	Reduces the noise the printer makes. However, enabling this may reduce print speed.	
Print Preview	Displays a preview of your document before printing.	
Job Arranger Lite	Select to print using the Job Arranger Lite feature.	

More Options Tab

Printing Presets	Add/Remove Presets	You can add or remove your own presets for frequently used print settings. Select the preset you want to use from the list.
Show Settings	Displays a list of items currently set on the **Main** and **More Options** tabs.	
Reset Defaults	Return all settings to their factory default values. The settings on the **Main** tab are also reset to their defaults.	
Document Size	Select the size of your document.	
Output Paper	Select the paper size on which you want to print. If the **Output Paper** differs from the **Document Size**, **Reduce/Enlarge Document** is selected automatically. You do not have to select it when printing without reducing or enlarging the size of a document.	
Reduce/Enlarge Document	Allows you to reduce or enlarge the size of a document.	
	Fit to Page	Automatically reduce or enlarge the document to fit to the paper size selected in **Output Paper**.
	Zoom to	Prints with a specific percentage.
	Center	Prints images in the center of the paper.
Color Correction	Automatic	Adjusts the colors of images automatically.
	Custom	Allows you to perform manual color correction. Click **Advanced** for further settings.
	Image Options	Enables print quality options such as Color Universal Print or Fix Red-Eye. You can also thicken thin lines to make them visible on the printouts.
Watermark Features	Allows you to make settings for watermarks.	
Additional Settings	Rotate 180°	Rotates pages 180 degrees before printing. This feature is helpful when printing on paper such as envelopes that are loaded in fixed direction in the printer.
	High Speed	Prints when the print head moves in both directions. The print speed is faster, but the quality may decline.
	Mirror Image	Inverts an image to print as it would appear in a mirror.

Maintenance Tab

Nozzle Check	Prints a nozzle check pattern to check if the print head nozzles are clogged.
Head Cleaning	Cleans the clogged nozzles in the print head. Because this feature uses some ink, clean the print head only if the nozzles are clogged.
Power Cleaning	Replaces all of the ink inside the ink tubes to improve the print quality.
Print Head Alignment	Aligns the print head so that images are printed clearly.
Job Arranger Lite	Opens the Job Arranger Lite window. Here you can open and edit previously saved data.
EPSON Status Monitor 3	Opens the EPSON Status Monitor 3 window. Here you can confirm the status of the printer and the consumables.

Monitoring Preferences	Allows you to make settings for items on the EPSON Status Monitor 3 window.
Extended Settings	Allows you to make a variety of settings. Right-click each item to view the Help for more details.
Print Queue	Displays the jobs waiting to be printed. You can check, pause, or resume print jobs.
Printer and Option Information	Displays the number of sheets of paper fed into the printer.
Language	Changes the language used on the printer driver window. To apply the settings, close the printer driver, and then open it again.
Software Update	Starts EPSON Software Updater to check for the latest version of applications on the Internet.
Technical Support	Allows you to access the Epson technical support website.

Printing from the Printer Driver on Mac OS

Printing Basics

Note:
Operations differ depending on the application. See the application's help for details.

1. Open the file you want to print.

   Load paper in the printer if it has not already been loaded.

2. Select **Print** from the **File** menu or another command to access the print dialog.

   If necessary, click **Show Details** or▼ to expand the print window.

3. Select your printer.

4. Select **Print Settings** from the pop-up menu.

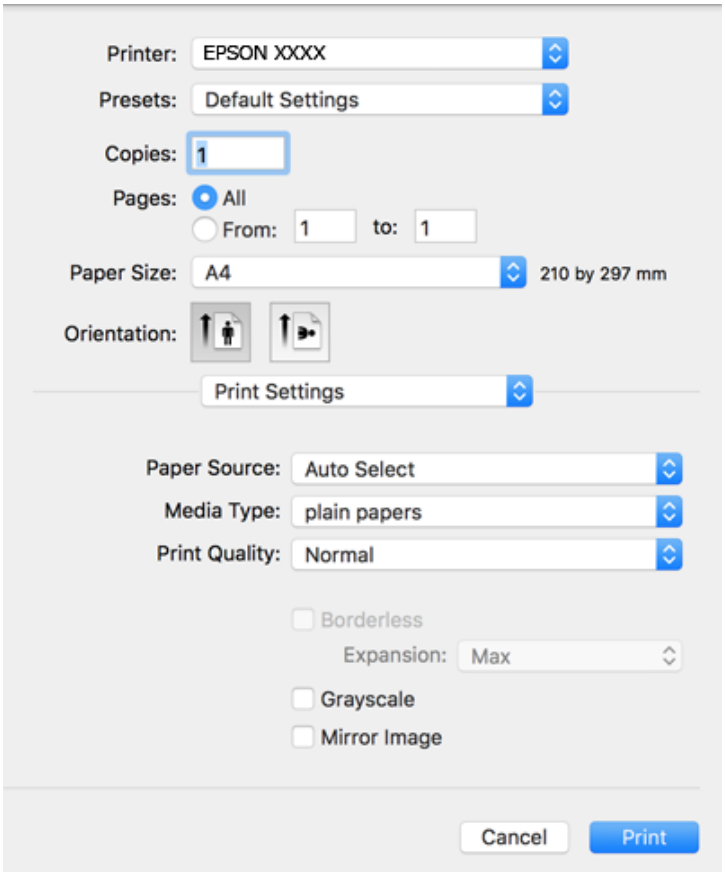

Note:
*On OS X Mountain Lion or later, if the **Print Settings** menu is not displayed, the Epson printer driver has not been installed correctly.*

*Select **System Preferences** from the menu > **Printers & Scanners** (or **Print & Scan**, **Print & Fax**), remove the printer, and then add the printer again. See the following to add a printer.*

http://epson.sn

5. Change the settings as necessary.

   See the menu options for the printer driver for details.

6. Click **Print**.

Related Information

➡ "Available Paper and Capacities" on page 31

➡ "Loading Paper in the Rear Paper Feed" on page 33

➡ "Menu Options for Print Settings" on page 63

Printing Several Pages on One Sheet

You can print two or four pages of data on a single sheet of paper.

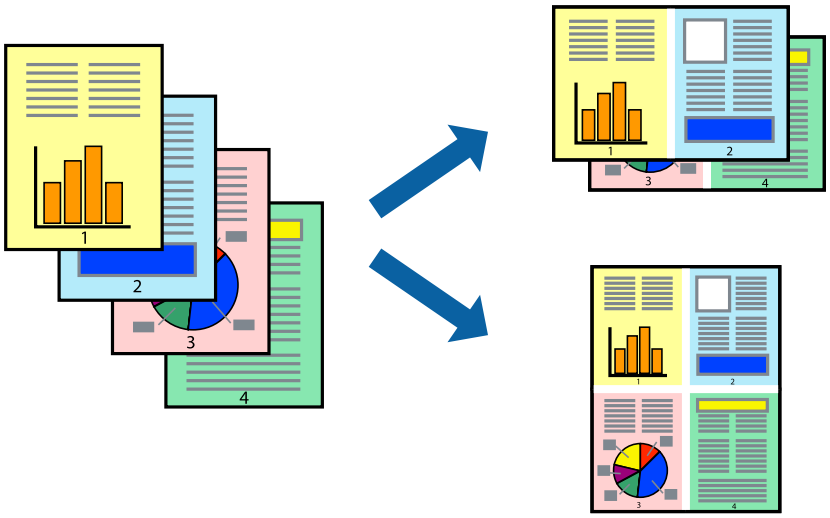

Print Settings

Select **Layout** from the pop-up menu. Set the number of pages in **Pages per Sheet**, the **Layout Direction** (page order), and **Border**.

Related Information

➡ “Printing Basics” on page 58

➡ “Menu Options for Layout” on page 63

Printing and Stacking in Page Order (Reverse Order Printing)

You can print from the last page so that the documents are stacked in page order.

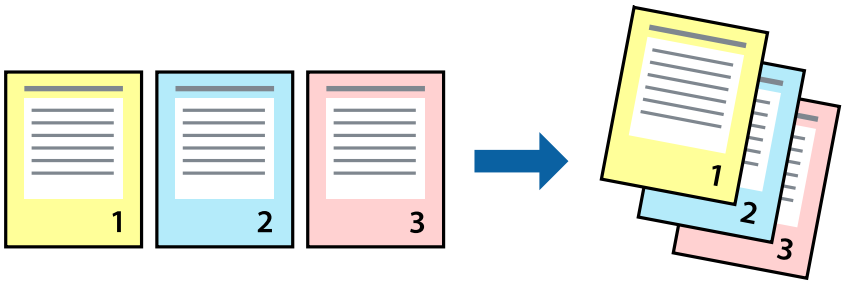

Print Settings

Select **Paper Handling** from the pop-up menu. Select **Reverse** as the **Page Order** setting.

Related Information

➡ “Printing Basics” on page 58

➡ “Menu Options for Paper Handling” on page 63

Printing a Reduced or Enlarged Document

You can reduce or enlarge the size of a document by a specific percentage or to fit the paper size you loaded in the printer.

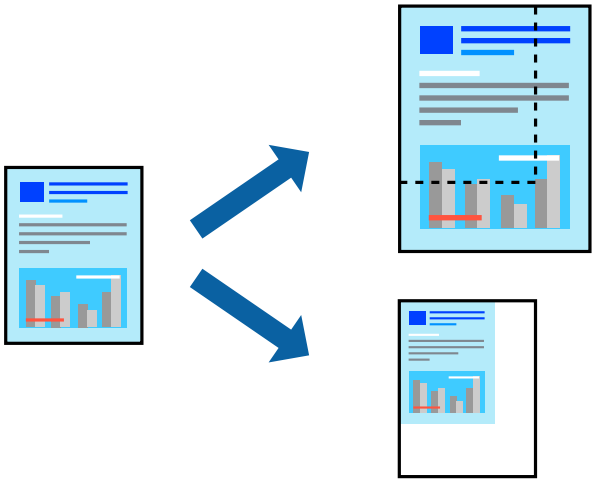

Print Settings

When printing to fit to the paper size, select **Paper Handling** from the pop-up menu, and then select **Scale to fit paper size**. Select the paper size you loaded in the printer in **Destination Paper Size**. When reducing the size of the document, select **Scale down only**.

When printing at a specific percentage, do one of the following.

❏ Select **Print** from the **File** menu of the application. Select **Printer**, enter a percentage in **Scale**, and then click **Print**.

❏ Select **Page Setup** from the **File** menu of the application. Select your printer in **Format For**, enter a percentage in **Scale**, and then click **OK**.

Note:
*Select the paper size you set in the application as the **Paper Size** setting.*

Related Information

➡ “Printing Basics” on page 58

➡ “Menu Options for Paper Handling” on page 63

Adjusting the Print Color

You can adjust the colors used in the print job.

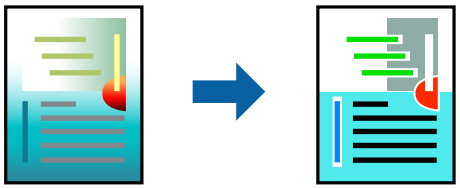

Note:
These adjustments are not applied to the original data.

Print Settings

Select **Color Matching** from the pop-up menu, and then select **EPSON Color Controls**. Select **Color Options** from the pop-up menu, and then select one of the available options. Click the arrow next to **Advanced Settings**, and then make more detailed settings.

Related Information

➡ "Printing Basics" on page 58

➡ "Menu Options for Color Matching" on page 63

➡ "Menu Options for Color Options" on page 64

Canceling Printing

You can cancel a print job from the computer. However, you cannot cancel a print job from the computer once it has been completely sent to the printer. In this case, cancel the print job by using the printer's control panel.

Canceling

Click the printer icon in the **Dock**. Select the job you want to cancel, and then do one of the following.

❏ OS X Mountain Lion or later

Click ⊗ next to the progress meter.

❏ Mac OS X v10.6.8 to v10.7.x

Click **Delete**.

Menu Options for the Printer Driver

Open the print window in an application, select the printer, and then access the printer driver window.

Note:
Menus vary depending on the option you selected.

Menu Options for Layout

Pages per Sheet	Select the number of pages to be printed on one sheet.
Layout Direction	Specify the order in which the pages will be printed.
Border	Prints a border around the pages.
Reverse page orientation	Rotates pages 180 degrees before printing. Select this item when printing on paper such as envelopes that are loaded in fixed direction in the printer.
Flip horizontally	Inverts an image to print as it would appear in a mirror.

Menu Options for Color Matching

ColorSync	Select the method for color adjustment. These options adjusts colors between the printer and the computer display to minimize the difference in color.
EPSON Color Controls	

Menu Options for Paper Handling

Collate pages	Prints multi-page documents collated in order and sorted into sets.	
Pages to Print	Select to print only odd pages or even pages.	
Page Order	Select to print from the top or the last page.	
Scale to fit paper size	Prints to fit to the paper size you loaded.	
	Destination Paper Size	Select the paper size to print on.
	Scale down only	Select when reducing the size of the document.

Menu Options for Cover Page

Print Cover Page	Select whether or not to print a cover page. When you want to add a back cover, select **After document**.
Cover Page Type	Select the contents of the cover page.

Menu Options for Print Settings

Paper Source	Select the paper source from which the paper is fed. If the printer has only one paper source, this item is not displayed. Selecting **Auto Select** selects the paper source that matches the paper setting on the printer automatically.
Media Type	Select the type of paper on which you print.
Print Quality	Select the pint quality you want to use for printing. The options vary depending on the paper type.

Borderless	This checkbox is selected when you select a borderless paper size.	
	Expansion	In borderless printing, the print data is enlarged slightly more than the paper size so that no margins are printed around the edges of the paper. Select the amount of enlargement.
Grayscale	Select when you want to print in black or shades of gray.	
Mirror Image	Inverts an image to print as it would appear in a mirror.	

Menu Options for Color Options

Manual Settings	Adjusts the color manually. In **Advanced Settings**, you can select detailed settings.
PhotoEnhance	Produces sharper images and more vivid colors by automatically adjusting the contrast, saturation, and brightness of the original image data.
Off (No Color Adjustment)	Print without enhancing or adjusting the color in any way.

Making Operation Settings for the Mac OS Printer Driver

Accessing the Operation Settings Window of the Mac OS Printer Driver

Select **System Preferences** from the menu > **Printers & Scanners** (or **Print & Scan**, **Print & Fax**), and then select the printer. Click **Options & Supplies** > **Options** (or **Driver**).

Operation Settings of the Mac OS Printer Driver

- ❏ Skip Blank Page: Avoids printing blank pages.
- ❏ Quiet Mode: Prints quietly. However, the print speed may be slower.
- ❏ Output documents for filing: Feed the paper so that it is easy to file when printing landscape data. Envelope printing is not supported.
- ❏ High Speed Printing: Prints when the print head moves in both directions. The print speed is faster, but the quality may decline.
- ❏ Remove white borders: Removes unnecessary margins during borderless printing.
- ❏ Warning Notifications: Allows the printer driver to display warning notifications.
- ❏ Establish bidirectional communication: Usually, this should be set to **On**. Select **Off** when acquiring the printer information is impossible because the printer is shared with Windows computers on a network or for any other reason.

Printing from Smart Devices

Using Epson iPrint

Epson iPrint is an application that allows you to print photos, documents, and web pages from a smart device such as a smartphone or tablet. You can use local print, printing from a smart device that is connected to the same wireless network as your printer, or remote print, printing from a remote location over the Internet. To use remote print, register your printer in the Epson Connect service.



Related Information

➡ “Printing Using a Network Service” on page 96

Installing Epson iPrint

You can install Epson iPrint on your smart device from the following URL or QR code.

http://ipr.to/c



Printing Using Epson iPrint

Start Epson iPrint from your smart device and select the item you want to use from the home screen.

The following screens are subject to change without notice. The contents may vary depending on the product.

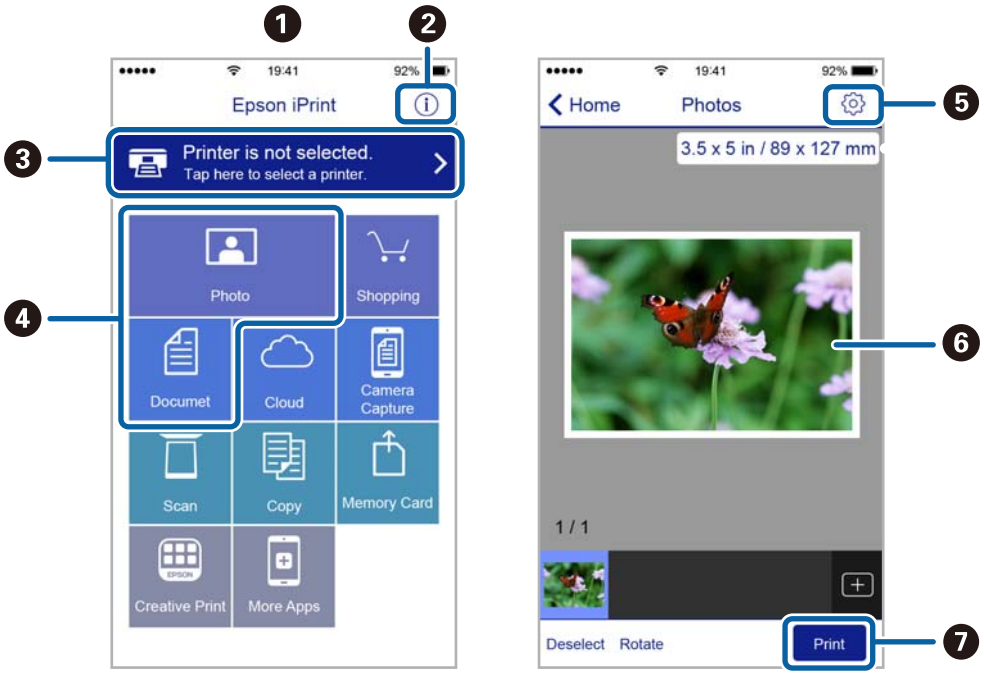

❶	Home screen displayed when the application is started.
❷	Displays information on how to setup the printer and a FAQ.
❸	Displays the screen where you can select the printer and make printer settings. Once you have selected the printer, you do not need to select it again from the next time.
❹	Select what you want to print such as photos and documents.
❺	Displays the screen to make print settings such as paper size and paper type.
❻	Displays photos and documents you selected.
❼	Starts printing.

Note:
To print from the document menu using iPhone, iPad, and iPod touch running iOS, start Epson iPrint after transferring the document you want to print using the file sharing function in iTunes.

Using Epson Print Enabler

You can wirelessly print your documents, emails, photos, and web pages right from your Android phone or tablet (Android v4.4 or later). With a few taps, your Android device will discover an Epson printer that is connected to the same wireless network.

1. Load paper in the printer.
2. Set up your printer for wireless printing.
3. On your Android device, install the Epson Print Enabler plug-in from Google Play.
4. Connect your Android device to the same wireless network as your printer.

5. Go to **Settings** on your Android device, select **Printing**, and then enable Epson Print Enabler.
6. From an Android application such as Chrome, tap the menu icon and print whatever is on the screen.

   Note:
   If you do not see your printer, tap ***All Printers*** *and select your printer.*

Related Information

➡ "Loading Paper in the Rear Paper Feed" on page 33
➡ "Connecting to a Smart Device" on page 18

Canceling the Ongoing Job

Press the ⊘ button on the printer's control panel to cancel the print job in progress.

Copying

Copying Basics

You can copy on A4-size paper at the same magnification. Margins with a width of 3 mm appear around the edges of the paper regardless of whether or not the original has margins around the edges of the paper. When copying originals smaller than A4-size, margins will be wider than 3 mm depending on the position where you place the original.

1. Load A4-size paper in the printer.
2. Place the originals.
3. Press the or button.

   Note:

   ❏ *Press the and the or buttons simultaneously to copy in draft mode, where you can use less ink and print at a lower density.*

   ❏ *The color, size, and border of the copied image are slightly different from the original.*

Related Information

➡ "Placing Originals" on page 37

Making Multiple Copies

You can make multiple copies at a time. You can specify up to 20 copies. Margins with a width of 3 mm appear around the edges of the paper.

1. Load the same number of sheets of A4-size paper as the number of copies you want to copy.
2. Place the originals.
3. Press the or button the same number of times as the number of copies you want to make. For example, if you want to make 10 copies in color, press the button 10 times.

   Note:
   Press the button within one second to change the number of copies. If the button is pressed after one second, the number of copies is set and copying starts.

Related Information

➡ "Copying Basics" on page 68

Scanning

Scanning from the Control Panel

You can save the scanned image in PDF format to a computer which is connected to the printer with a USB cable.

> ***Important:***
> *Make sure you have installed Epson Scan 2 and Epson Event Manager on your computer before using this feature.*

1. Place the originals.
2. Press the button and the button simultaneously.

   Note:
   - ❏ *You can change the scan settings such as the scanning size, folder to save, or save format, by using Epson Event Manager.*
   - ❏ *The color, size, and border of the scanned image will not be exactly the same as the original.*

Related Information

➡ "Placing Originals" on page 37

Scanning from a Computer

Scanning Using Epson Scan 2

You can scan using the scanner driver "Epson Scan 2". You can scan originals using detailed settings that are suitable for text documents.

See the Epson Scan 2 help for an explanation of each setting item.

1. Place the original.
2. Start Epson Scan 2.

3. Make the following settings on the **Main Settings** tab.

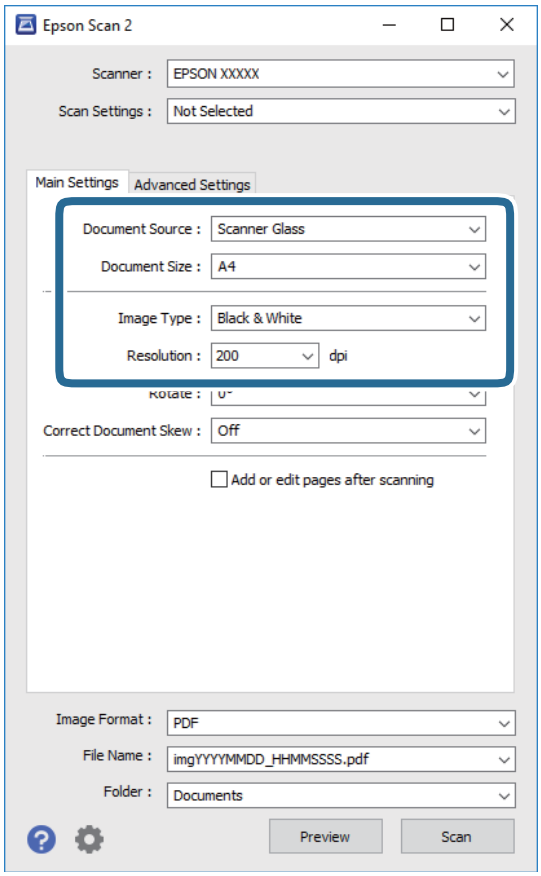

❏ Document Size: Select the size of the original you placed.

❏ Image Type: Select the color for saving the scanned image.

❏ Resolution: Select the resolution.

Note:
*The **Document Source** setting is fixed as **Scanner Glass**. You cannot change this setting.*

4. Make other scan settings if necessary.

❏ You can preview the scanned image by clicking the **Preview** button. The preview window opens, and the previewed image is displayed.

❏ On the **Advanced Settings** tab, you can make detailed image adjustment settings that are suitable for text documents, such as the following.

❏ Remove Background: Remove the background of the originals.

❏ Text Enhancement: You can make blurred letters in the original clear and sharp.

❏ Auto Area Segmentation: You can make letters clear and images smooth when performing black and white scanning for a document that contains images.

❏ Color Enhance: You can enhance the color specified for the scanned image, and then save it in grayscale or black and white.

❏ Threshold: You can adjust the border for monochrome binary (black and white).

❏ Unsharp Mask: You can enhance and sharpen the outlines of the image.

❏ Descreening: You can remove moiré patterns (web-like shadows) that appear when scanning printed papers such as a magazine.

❏ Edge Fill: You can remove the shadow created around the scanned image.

❏ Dual Image Output (Windows Only): You can scan once and save two images with different output settings at the same time.

Note:
The items may not be available depending on other settings you made.

5. Set the file saving settings.

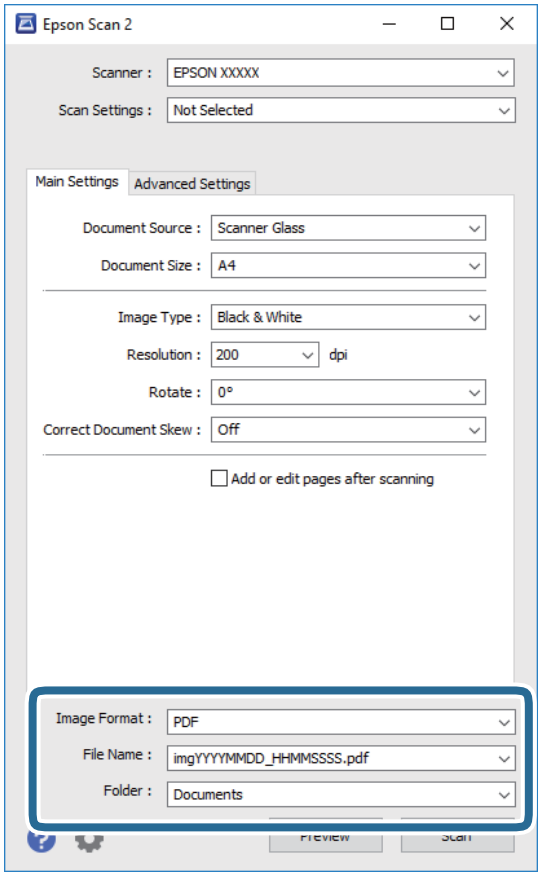

❏ Image Format: Select the save format from the list.

You can make detailed settings for each save format except BITMAP and PNG. Select **Options** from the list after selecting the save format.

❏ File Name: Confirm the save file name displayed.

You can change settings for the file name by selecting **Settings** from the list.

❏ Folder: Select the save folder for the scanned image from the list.

You can select another folder or create a new folder by selecting **Select** from the list.

6. Click **Scan**.

Related Information

➡ "Placing Originals" on page 37

➡ "Application for Scanning Documents and Images (Epson Scan 2)" on page 90

Scanning from Smart Devices

Epson iPrint is an application that allows you to scan photos and documents from a smart device, such as a smartphone or tablet, that is connected to the same wireless network as your printer. You can save the scanned data on a smart device or to Cloud services, send it by email, or print it.

Installing Epson iPrint

You can install Epson iPrint on your smart device from the following URL or QR code.

http://ipr.to/c

Scanning Using Epson iPrint

Start Epson iPrint from your smart device and select the item you want to use from the home screen.

Scanning

The following screens are subject to change without notice.

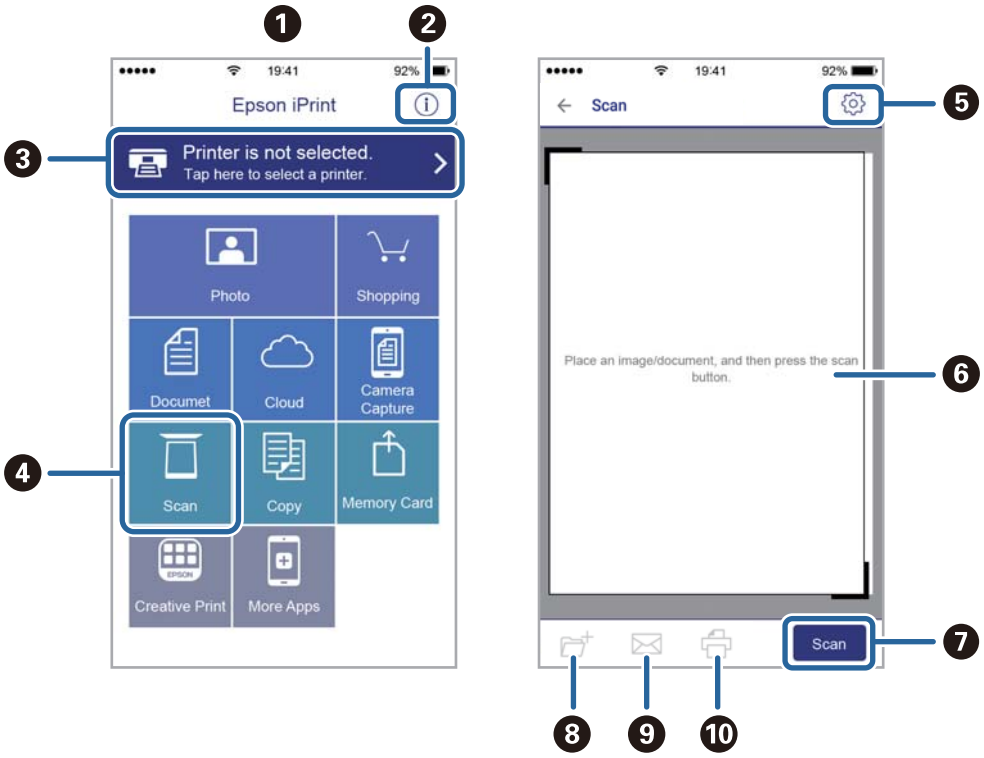

❶	Home screen displayed when the application is started.
❷	Displays information on how to setup the printer and a FAQ.
❸	Displays the screen where you can select the printer and make printer settings. Once you have selected the printer, you do not need to select it again from the next time.
❹	Displays the scanning screen.
❺	Displays the screen where you can make scan settings such as resolution.
❻	Displays scanned images.
❼	Starts scanning.
❽	Displays the screen where you can save scanned data to a smart device or Cloud services.
❾	Displays the screen where you can send scanned data by email.
❿	Displays the screen where you can print scanned data.

Refilling Ink

Checking the Ink Levels

To confirm the actual ink remaining, visually check the ink levels in all of the printer's tanks.

Important:

Prolonged use of the printer when the ink level is below the lower line could damage the printer.

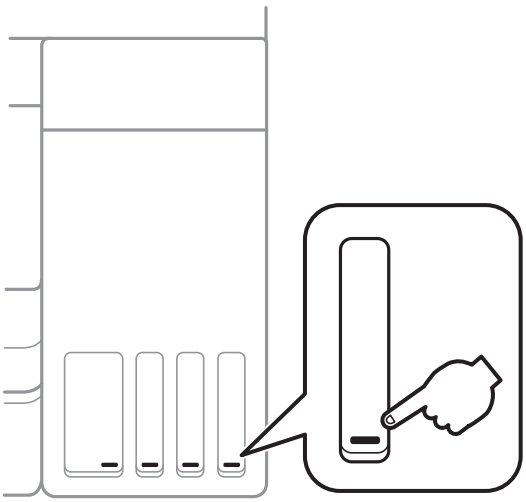

Ink Bottle Codes

Epson recommends the use of genuine Epson ink bottles.

The following are the codes for genuine Epson ink bottles.

For Europe

Product	BK: Black	C: Cyan	M: Magenta	Y: Yellow
ET-2700 Series	102	102	102	102
L4150 Series	101	101	101	101

For Australia and New Zealand

BK: Black	C: Cyan	M: Magenta	Y: Yellow
502	502	502	502

For Asia

BK: Black	C: Cyan	M: Magenta	Y: Yellow
001	001	001	001

Important:

Epson warranty does not cover damage caused by inks other than those specified, including any genuine Epson ink not designed for this printer or any third party ink.

Other products not manufactured by Epson may cause damage that is not covered by Epson's warranties, and under certain circumstances, may cause erratic printer behavior.

Note:

- ❏ *Ink bottle codes may vary by location. For the correct codes in your area, contact Epson support.*
- ❏ *For users in Europe, visit the following website for information on Epson's ink bottle yields.*
  http://www.epson.eu/pageyield

Related Information

➡ "Technical Support Web Site" on page 138

Ink Bottle Handling Precautions

Read the following instructions before refilling ink.

Handling precautions

- ❏ Use ink bottles with the correct part code for this printer.
- ❏ This printer requires careful handling of ink. Ink may splatter when the ink tanks are filled or refilled with ink. If ink gets on your clothes or belongings, it may not come off.
- ❏ Do not shake too vigorously or squeeze the ink bottles.
- ❏ Once you open an ink bottle, we recommend using it as soon as possible.
- ❏ Store ink bottles at normal room temperature and keep them away from direct sunlight.
- ❏ Epson recommends using the ink bottle before the date printed on the package.
- ❏ Store the ink bottles in the same environment as the printer.
- ❏ When storing or transporting an ink bottle, do not tilt the bottle and do not subject it to impacts or temperature changes. Otherwise, ink may leak even if the cap on the ink bottle is tightened securely. Be sure to keep the ink bottle upright when tightening the cap, and take precautions to prevent ink from leaking when transporting the bottle, for example, putting the bottle in a bag.
- ❏ After bringing an ink bottle inside from a cold storage site, allow it to warm up at room temperature for at least three hours before using it.
- ❏ Do not open the ink bottle package until you are ready to fill the ink tank. The ink bottle is vacuum packed to maintain its reliability. If you leave an ink bottle unpacked for a long time before using it, normal printing may not be possible.
- ❏ If any of the ink tanks are not filled up to the lower line, refill the ink soon. Prolonged use of the printer when the ink level is below the lower line could damage the printer.
- ❏ For optimum print results do not maintain low ink levels for extended periods of time.

❏ Although the ink bottles may contain recycled materials, this does not affect printer function or performance.

❏ Specifications and appearance of the ink bottle are subject to change without prior notice for improvement.

❏ Quoted yields may vary depending on the images that you are printing, the paper type that you are using, the frequency of your prints and environmental conditions such as temperature.

Ink consumption

❏ To maintain optimum print head performance, some ink is consumed from all ink tanks not only during printing but also during maintenance operation such as print head cleaning.

❏ When printing in monochrome or grayscale, color inks instead of black ink may be used depending on the paper type or print quality settings. This is because a mixture of color inks is used to create black.

❏ The ink in the ink bottles supplied with your printer is partly used during initial setup. In order to produce high quality printouts, the print head in your printer will be fully charged with ink. This one-off process consumes a quantity of ink and therefore these bottles may print fewer pages compared to subsequent ink bottles.

Refilling the Ink Tanks

Ink can be refilled at any time.

1. Open the scanner unit with the document cover closed.

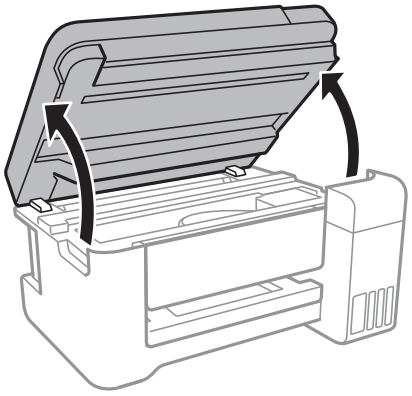

2. Open the ink tank cover.

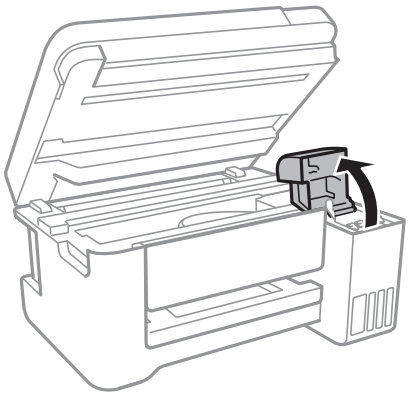

3. Open the cap of the ink tank.

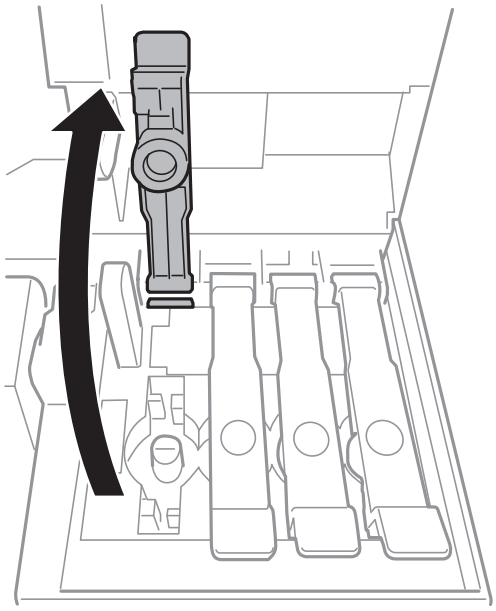

> ***Important:***
>
> *Make sure that the color of the ink tank matches the ink color that you want to refill.*

4. While holding the ink bottle upright, turn the cap slowly to remove it.

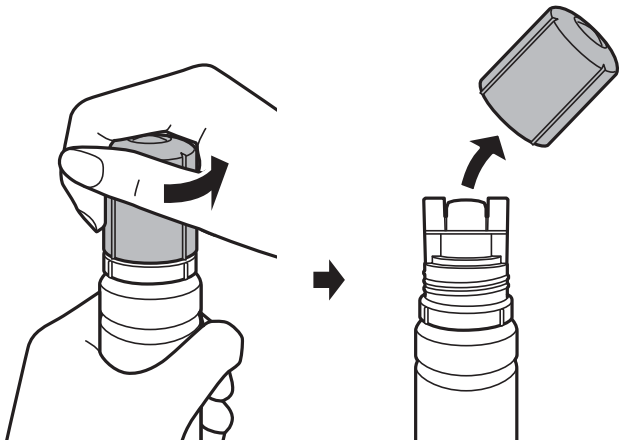

> ***Important:***
>
> ❏ *Be careful not to spill any ink.*
>
> ❏ *Do not touch the top of the ink bottle after removing the cap; otherwise you may be smeared with ink.*

5. Position the top of the ink bottle along the slot in front of the filling port, and then stand the bottle slowly to insert it into the filling port.

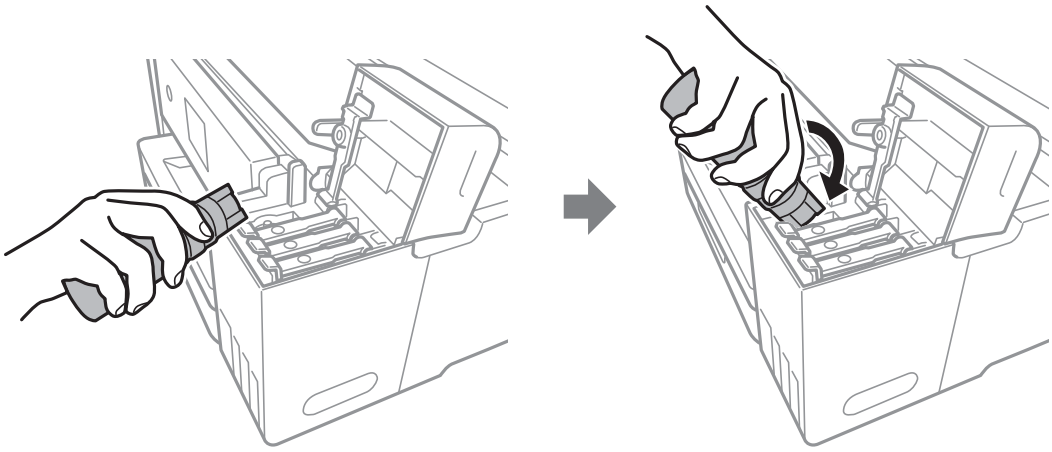

> ***Important:***
> *Do not allow the top of the ink bottle to hit against any objects after removing its cap; otherwise ink may spill.*

6. Insert the top of the ink bottle securely into the filling port of the tank to refill the tank with ink.

   Ink pours into the tank just by holding the bottle normally without squeezing. The ink flow stops automatically when the ink is filled to the upper line.

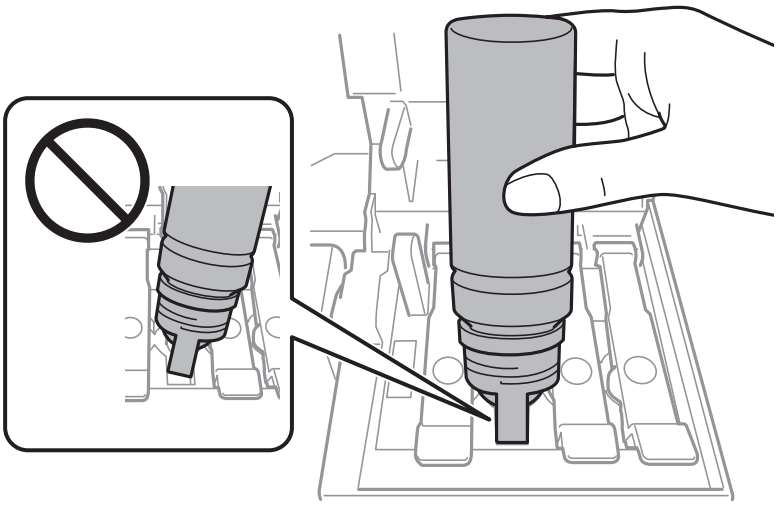

Note:
If the ink does not start flowing into the tank, remove the ink bottle and try reinserting it.

7. When you have finished refilling the ink, remove the ink bottle, and then close the cap of the ink tank securely.

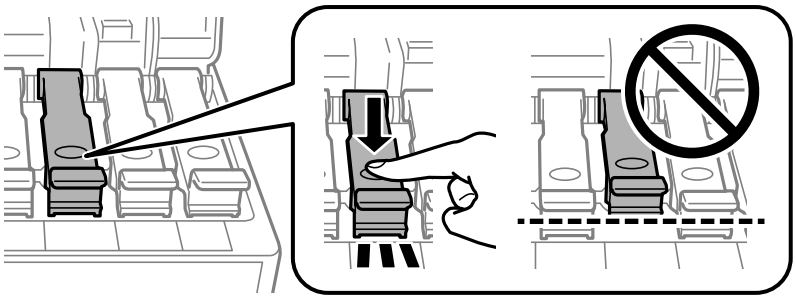

Important:
Do not leave the ink bottle inserted; otherwise the bottle may be damaged or ink may leak.

Note:
If any ink remains in the ink bottle, tighten the cap and store the bottle upright for later use.

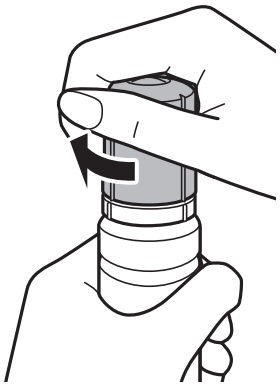

8. Close the ink tank cover firmly.

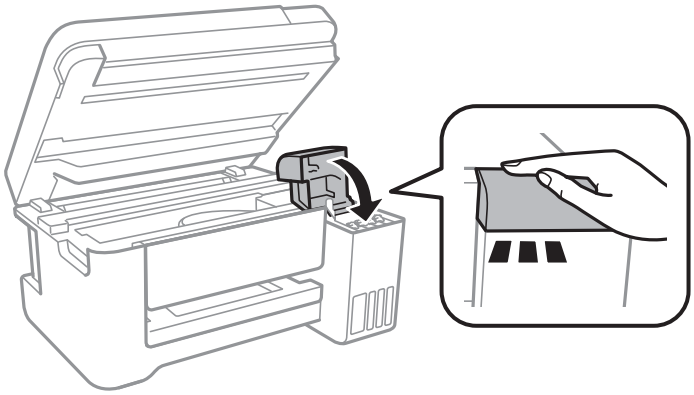

9. Close the scanner unit.

Related Information

➡ "Ink Bottle Codes" on page 74
➡ "Ink Bottle Handling Precautions" on page 75
➡ "Ink Spilled" on page 126

Refilling Ink

➡ “Loading Paper in the Rear Paper Feed” on page 33

Maintaining the Printer

Checking and Cleaning the Print Head

If the nozzles are clogged, the printouts become faint, there is visible banding, or unexpected colors appear. When print quality has declined, use the nozzle check feature and check if the nozzles are clogged. If the nozzles are clogged, clean the print head.

Important:

- ❏ *Do not open the scanner unit or turn off the printer during head cleaning. If the head cleaning is incomplete, you may not be able to print.*
- ❏ *Because print head cleaning uses some ink, clean the print head only if quality declines.*
- ❏ *When ink is low, you may not be able to clean the print head.*
- ❏ *If print quality has not improved after repeating nozzle check and head cleaning three times, wait for at least 12 hours without printing, and then run the nozzle check again and repeat the head cleaning if necessary. We recommend to turn off the printer. If print quality has still not improved, run Power Cleaning. If it has still not improved, contact Epson support.*
- ❏ *To prevent the print head from drying out, do not unplug the printer while the power is on.*

Checking and Cleaning the Print Head - Printer Buttons

1. Load A4-size plain paper in the printer.
2. Press the ⏻ button to turn off the printer.
3. Turn the printer on while holding the ▽ button down, and then release the buttons when the power light flashes.

   The nozzle check pattern is printed.

   Note:
   It may take some time to start printing the nozzle check pattern.
4. Examine the printed pattern. If there are broken lines or missing segments as shown in the "NG" pattern, the print head nozzles may be clogged. Go to the next step. If you cannot see any broken lines or missing segments as in the following "OK" pattern, the nozzles are not clogged. Print head cleaning is not necessary.

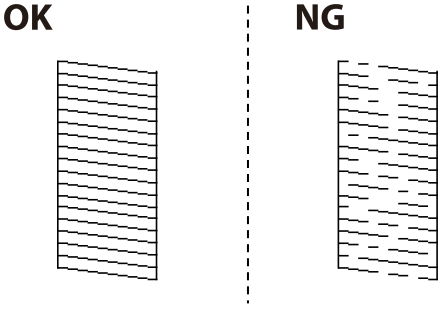

5. Hold the ⊜ button down for three seconds until the power light starts flashing.

   Print head cleaning starts.

   Note:
   It may take some time to start print head cleaning.

6. When the power light stops flashing, print a nozzle check pattern again. Repeat cleaning and printing the pattern until all lines are printed completely.

Related Information

➡ "Loading Paper in the Rear Paper Feed" on page 33

Checking and Cleaning the Print Head - Windows

1. Load A4-size plain paper in the printer.
2. Access the printer driver window.
3. Click **Nozzle Check** on the **Maintenance** tab.
4. Follow the on-screen instructions.

Related Information

➡ "Loading Paper in the Rear Paper Feed" on page 33
➡ "Accessing the Printer Driver" on page 40

Checking and Cleaning the Print Head - Mac OS

1. Load A4-size plain paper in the printer.
2. Select **System Preferences** from the menu > **Printers & Scanners** (or **Print & Scan**, **Print & Fax**), and then select the printer.
3. Click **Options & Supplies** > **Utility** > **Open Printer Utility**.
4. Click **Nozzle Check**.
5. Follow the on-screen instructions.

Running Power Cleaning

The **Power Cleaning** utility allows you to replace all of the ink inside the ink tubes. In the following situations, you may need to use this feature to improve the print quality.

❏ You printed or performed head cleaning when the ink levels were too low to be seen in the ink tank windows.

❏ You performed the nozzle check and head cleaning several times and then waited for at least 12 hours without printing, but print quality still did not improve.

Before running this feature, read the following instructions.

Important:

Make sure that there is enough ink in the ink tanks.

Visually check all ink tanks are at least a third full. Low ink levels during Power Cleaning could damage the product.

Important:

An interval of 12 hours is required between each Power Cleaning.

Normally, a single Power Cleaning should resolve the print quality issue within 12 hours. Therefore, to avoid unnecessary ink usage, you must wait 12 hours before you try it again.

Important:

This feature effects the service life of the ink pads. The ink pads reach their capacity earlier by running this feature. If the ink pads have reached the end of their service life, contact Epson Support to request replacement.

Note:
When the ink levels are insufficient for Power Cleaning, you cannot run this feature. Even in this case, the levels for printing may remain.

Running Power Cleaning - Windows

1. Access the printer driver window.
2. Click **Power Cleaning** on the **Maintenance** tab.
3. Follow the on-screen instructions.

Related Information

➡ "Accessing the Printer Driver" on page 40

Running Power Cleaning - Mac OS

1. Select **System Preferences** from the  menu > **Printers & Scanners** (or **Print & Scan**, **Print & Fax**), and then select the printer.
2. Click **Options & Supplies** > **Utility** > **Open Printer Utility**.
3. Click **Power Cleaning**.
4. Follow the on-screen instructions.

Aligning the Print Head

If you notice a misalignment of vertical lines or blurred images, align the print head.

Aligning the Print Head - Windows

1. Load A4-size plain paper in the printer.
2. Access the printer driver window.
3. Click **Print Head Alignment** on the **Maintenance** tab.
4. Follow the on-screen instructions.

Related Information

➡ "Loading Paper in the Rear Paper Feed" on page 33
➡ "Accessing the Printer Driver" on page 40

Aligning the Print Head - Mac OS

1. Load A4-size plain paper in the printer.
2. Select **System Preferences** from the menu > **Printers & Scanners** (or **Print & Scan**, **Print & Fax**), and then select the printer.
3. Click **Options & Supplies** > **Utility** > **Open Printer Utility**.
4. Click **Print Head Alignment**.
5. Follow the on-screen instructions.

Related Information

➡ "Loading Paper in the Rear Paper Feed" on page 33

Cleaning the Paper Path

When the printouts are smeared or scuffed, clean the roller inside.

> ***Important:***
> *Do not use tissue paper to clean the inside of the printer. The print head nozzles may be clogged with lint.*

Cleaning the Paper Path for Ink Smears

1. Make sure there is no dust or stains on the scanner glass and the document cover.
2. Load A4-size plain paper in the printer.
3. Start copying without placing the original.

   Note:
   Repeat this procedure until the paper is not smeared with ink.

Related Information

➡ "Loading Paper in the Rear Paper Feed" on page 33

Cleaning the Scanner Glass

When the copies or scanned images are smeared, clean the scanner glass.

> ***Important:***
> *Never use alcohol or thinner to clean the printer. These chemicals can damage the printer.*

1. Open the document cover.

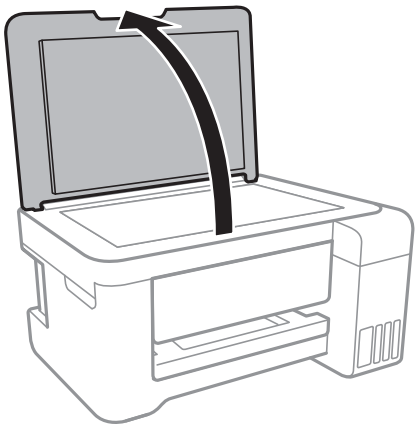

2. Use a soft, dry, clean cloth to clean the surface of the scanner glass.

> ***Important:***
> - ❏ *If the glass surface is stained with grease or some other hard-to-remove material, use a small amount of glass cleaner and a soft cloth to remove it. Wipe off all remaining liquid.*
> - ❏ *Do not press the glass surface too hard.*
> - ❏ *Be careful not to scratch or damage the surface of the glass. A damaged glass surface can decrease the scan quality.*

Cleaning the Translucent Film

When the printout is not improved after aligning the print head or cleaning the paper path, the translucent film inside the printer may be smeared.

Items required:

❏ Cotton swabs (several)

❏ Water with a few drops of detergent (2 to 3 drops of detergent in 1/4 cup of tap water)

❏ Light for checking smears

> ***Important:***
> *Do not use cleaning liquid other than water with a few drops of detergent.*

1. Turn off the printer by pressing the ⏻ button.
2. Open the scanner unit.

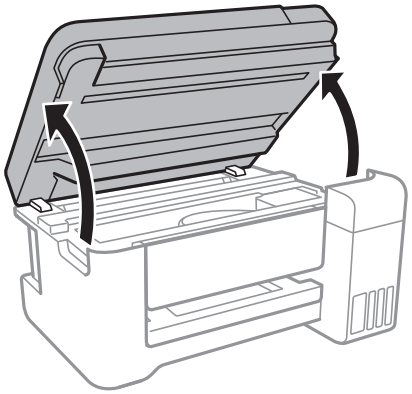

3. Check if the translucent film is smeared. Smears are easier to see if you use a light.

   If there are smears (such as finger marks or grease) on the translucent film (A), go to the next step.

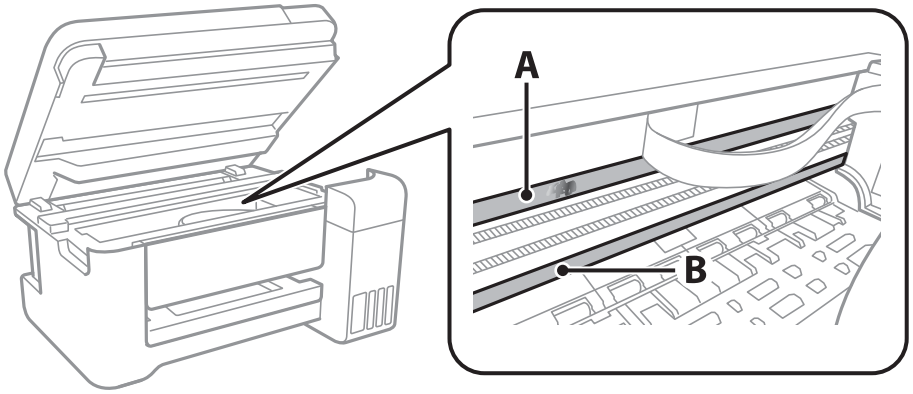

A: Translucent film

B: Rail

> **Important:**
> *Be careful not to touch the rail (B). Otherwise, you may not be able to print. Do not wipe off the grease on the rail, because this is necessary for operations.*

4. Moisten a cotton swab with the water with a few drops of detergent so that it is not dripping water, and then wipe the smeared part.

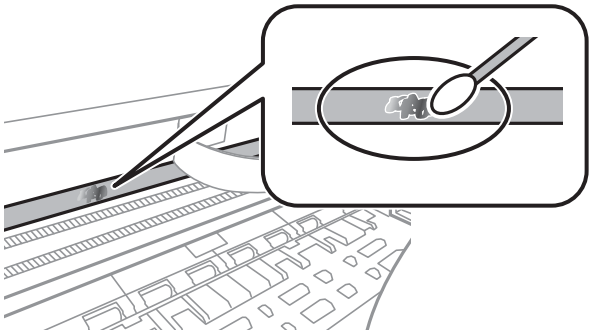

> **Important:**
> *Wipe off the smear gently. If you press the cotton swab too hard to the film, the springs of the film may be dislocated and the printer may be damaged.*

5. Use a new dry cotton swab to wipe the film.

> **Important:**
> *Do not leave any fibers on the film.*

Note:
To prevent the smear from spreading, frequently replace the cotton swab with a new one.

6. Repeat steps 4 and 5 until the film is not smeared.

7. Visually check that the film is not smeared.

Checking the Total Number of Pages Fed Through the Printer

You can check the total number of pages fed through the printer.

Checking the Total Number of Pages Fed Through the Printer - Printer Buttons

The information is printed together with the nozzle check pattern.

1. Load A4-size plain paper in the printer.

2. Press the ⏻ button to turn off the printer.

3. Turn the printer on while holding the ⏻ button down, and then release the buttons when the power light flashes.

Checking the Total Number of Pages Fed Through the Printer - Windows

1. Access the printer driver window.

2. Click **Printer and Option Information** on the **Maintenance** tab.

Related Information

➡ "Accessing the Printer Driver" on page 40

Checking the Total Number of Pages Fed Through the Printer - Mac OS

1. Select **System Preferences** from the menu > **Printers & Scanners** (or **Print & Scan**, **Print & Fax**), and then select the printer.

2. Click **Options & Supplies** > **Utility** > **Open Printer Utility**.

3. Click **Printer and Option Information**.

Network Service and Software Information

This section introduces the network services and software products available for your printer from the Epson website or the supplied software disc.

Application for Configuring Printer Operations (Web Config)

Web Config is an application that runs in a web browser, such as Internet Explorer and Safari, on a computer or smart device. You can confirm the printer status or change the network service and printer settings. To use the Web Config, connect the printer and the computer or device to the same network.

The following browsers are supported.

OS	Browser
Windows XP SP3 or later	Internet Explorer 8 or later, Firefox*, Chrome*
Mac OS X v10.6.8 or later	Safari*, Firefox*, Chrome*
iOS*	Safari*
Android 2.3 or later	Default browser
Chrome OS*	Default browser

* Use the latest version.

Running Web Config on a Web Browser

1. Check the printer's IP address.

   Hold down the button for at least 10 seconds to print the network status sheet, and then check the printer's IP address.

2. Launch a Web browser from a computer or smart device, and then enter the printer's IP address.

   Format:

   IPv4: http://the printer's IP address/

   IPv6: http://[the printer's IP address]/

   Examples:

   IPv4: http://192.168.100.201/

   IPv6: http://[2001:db8::1000:1]/

   Note:
   Using the smart device, you can also run Web Config from the maintenance screen of Epson iPrint.

Related Information

➡ "Using Epson iPrint" on page 65

Running Web Config on Windows

When connecting a computer to the printer using WSD, follow the steps below to run Web Config.

1. Access the devices and printers screen in Windows.
   - ❏ Windows 10/Windows Server 2016

     Right-click the start button or press and hold it, and then select **Control Panel** > **View devices and printers** in **Hardware and Sound**.
   - ❏ Windows 8.1/Windows 8/Windows Server 2012 R2/Windows Server 2012

     Select **Desktop** > **Settings** > **Control Panel** > **View devices and printers** in **Hardware and Sound** (or **Hardware**).
   - ❏ Windows 7/Windows Server 2008 R2

     Click the start button, and select **Control Panel** > **View devices and printers** in **Hardware and Sound**.
   - ❏ Windows Vista/Windows Server 2008

     Click the start button, and select **Control Panel** > **Printers** in **Hardware and Sound**.
2. Right-click on your printer and select **Properties**.
3. Select the **Web Service** tab and click the URL.

Running Web Config on Mac OS

1. Select **System Preferences** from the menu > **Printers & Scanners** (or **Print & Scan**, **Print & Fax**), and then select the printer.
2. Click **Options & Supplies**> **Show Printer Webpage**.

Application for Scanning Documents and Images (Epson Scan 2)

Epson Scan 2 is an application for controlling scanning. You can adjust the size, resolution, brightness, contrast, and quality of the scanned image. You can also start Epson Scan 2 from a TWAIN-compliant scanning application. See the application's help for details.

Starting on Windows

Note:
*For Windows Server operating systems, make sure the **Desktop Experience** feature is installed.*

- ❏ Windows 10/Windows Server 2016

  Click the start button, and then select **EPSON** > **Epson Scan 2**.

❏ Windows 8.1/Windows 8/Windows Server 2012 R2/Windows Server 2012

Enter the application name in the search charm, and then select the displayed icon.

❏ Windows 7/Windows Vista/Windows XP/Windows Server 2008 R2/Windows Server 2008/Windows Server 2003 R2/Windows Server 2003

Click the start button, and then select **All Programs** or **Programs** > **EPSON** > **Epson Scan 2**> **Epson Scan 2**.

Starting on Mac OS

Note:
Epson Scan 2 does not support the Mac OS fast user switching feature. Turn off fast user switching.

Select **Go** > **Applications** > **Epson Software** > **Epson Scan 2**.

Related Information

➡ "Scanning Using Epson Scan 2" on page 69

➡ "Installing the Latest Applications" on page 94

Adding the Network Scanner

Before using Epson Scan 2, you need to add the network scanner.

1. Start the software, and then click **Add** on the **Scanner Settings** screen.

   Note:
   ❏ *If **Add** is grayed out, click **Enable Editing**.*

   ❏ *If the main screen of Epson Scan 2 is displayed, it has already been connected to the scanner. If you want to connect to another network, select **Scanner** > **Settings** to open the **Scanner Settings** screen.*

2. Add the network scanner. Enter the following items, and then click **Add**.

   ❏ **Model**: Select the scanner you want to connect to.

   ❏ **Name**: Enter the scanner name within 32 characters.

   ❏ **Search for Network**: When the computer and the scanner are on the same network, the IP address is displayed. If it is not displayed, click the button. If the IP address is still not displayed, click **Enter address**, and then enter the IP address directly.

3. Select the scanner on the **Scanner Settings**screen, and then click **OK**.

Application for Configuring Scanning Operations from the Control Panel (Epson Event Manager)

Epson Event Manager is an application that allows you to manage scanning from the control panel and save images to a computer. You can add your own settings as presets, such as the document type, the save folder location, and the image format. See the application's help for details.

Note:
Windows Server operating systems are not supported.

Starting on Windows

❏ Windows 10

Click the start button, and then select **Epson Software** > **Event Manager**.

❏ Windows 8.1/Windows 8

Enter the application name in the search charm, and then select the displayed icon.

❏ Windows 7/Windows Vista/Windows XP

Click the start button, and then select **All Programs** or **Programs** > **Epson Software** > **Event Manager**.

Starting on Mac OS

Go > **Applications** > **Epson Software** > **Event Manager**.

Related Information

➡ "Installing the Latest Applications" on page 94

Application for Laying Out Photos (Epson Easy Photo Print)

Epson Easy Photo Print is an application that allows you to easily print photos with various layouts. You can preview the photo image and adjust the images or position. You can also print photos with a frame. See the application's help for details.

By printing on genuine Epson photo paper, the ink quality is maximized and the printouts are vivid and clear.

To perform borderless printing using a commercially available application, make the following settings.

❏ Create image data to fit the paper size. If a margin setting is available in the application you are using, set the margin to 0 mm.

❏ Enable the borderless printing setting in the printer driver.

Note:

❏ *Windows Server operating systems are not supported.*

❏ *To use this application, the printer driver needs to be installed.*

Starting on Windows

❏ Windows 10

Click the start button, and then select **Epson Software** > **Epson Easy Photo Print**.

❏ Windows 8.1/Windows 8

Enter the application name in the search charm, and then select the displayed icon.

❏ Windows 7/Windows Vista/Windows XP

Click the start button, and then select **All Programs** or **Programs** > **Epson Software** > **Epson Easy Photo Print**.

Starting on Mac OS

Go > **Applications** > **Epson Software** > **Epson Easy Photo Print**.

Related Information

➡ "Installing the Latest Applications" on page 94

Application for Printing Web Pages (E-Web Print)

E-Web Print is an application that allows you to easily print web pages with various layouts. See the application's help for details. You can access the help from the **E-Web Print** menu on the **E-Web Print** tool bar.

Note:

❏ *Windows Server operating systems are not supported.*

❏ *Check for supported browsers and the latest version from the download site.*

Starting

When you install E-Web Print, it is displayed in your browser. Click **Print** or **Clip**.

Related Information

➡ "Installing the Latest Applications" on page 94

Software Update Tools (EPSON Software Updater)

EPSON Software Updater is an application that checks for new or updated software on the internet and installs it. You can also update the printer's firmware and manual.

Note:

Windows Server operating systems are not supported.

Installing Method

Download EPSON Software Updater from the Epson website.

If you are using a Windows computer and cannot to download it from the website, you can install it from the supplied software disc.

http://www.epson.com

Starting on Windows

❏ Windows 10

Click the start button, and then select **Epson Software** > **EPSON Software Updater**.

❏ Windows 8.1/Windows 8

Enter the application name in the search charm, and then select the displayed icon.

❏ Windows 7/Windows Vista/Windows XP

Click the start button, and then select **All Programs** or **Programs** > **Epson Software** > **EPSON Software Updater**.

Note:

You can also start EPSON Software Updater by clicking the printer icon on the task bar on the desktop, and then selecting ***Software Update****.*

Starting on Mac OS

Select **Go** > **Applications** > **Epson Software** > **EPSON Software Updater**.

Installing the Latest Applications

Note:
When reinstalling an application, you need to uninstall it first.

1. Make sure the printer and the computer are available for communication, and the printer is connected to the Internet.

2. Start EPSON Software Updater.

   The screenshot is an example on Windows.

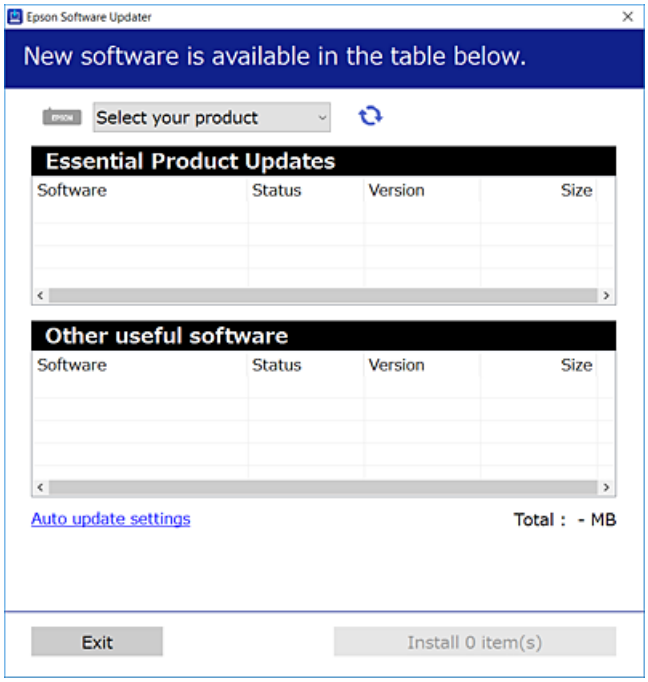

3. For Windows, select your printer, and then click to check for the latest available applications.

4. Select the items you want to install or update, and then click the install button.

> ***Important:***
> *Do not turn off or unplug the printer until the update is complete; otherwise, the printer may malfunction.*

Note:

- *You can download the latest applications from the Epson website.*

  http://www.epson.com

- *If you use Windows Server operating systems, you cannot use EPSON Software Updater. Download the latest applications from the Epson website.*

Related Information

➡ "Software Update Tools (EPSON Software Updater)" on page 93

➡ "Uninstalling Applications" on page 95

Uninstalling Applications

Log in to your computer as an administrator. Enter the administrator password if the computer prompts you.

Uninstalling Applications - Windows

1. Press the ⏻ button to turn off the printer.
2. Quit all running applications.
3. Open **Control Panel**:
   - ❏ Windows 10/Windows Server 2016

     Right-click the start button or press and hold it, and then select **Control Panel**.
   - ❏ Windows 8.1/Windows 8/Windows Server 2012 R2/Windows Server 2012

     Select **Desktop** > **Settings** > **Control Panel**.
   - ❏ Windows 7/Windows Vista/Windows XP/Windows Server 2008 R2/Windows Server 2008/Windows Server 2003 R2/Windows Server 2003

     Click the start button and select **Control Panel**.
4. Open **Uninstall a program** (or **Add or Remove Programs**):
   - ❏ Windows 10/Windows 8.1/Windows 8/Windows 7/Windows Vista/Windows Server 2016/Windows Server 2012 R2/Windows Server 2012/Windows Server 2008 R2/Windows Server 2008

     Select **Uninstall a program** in **Programs**.
   - ❏ Windows XP/Windows Server 2003 R2/Windows Server 2003

     Click **Add or Remove Programs**.
5. Select the application you want to uninstall.

   You cannot uninstall the printer driver if there is any print jobs. Delete or wait to be printed the jobs before uninstalling.
6. Uninstall the applications:
   - ❏ Windows 10/Windows 8.1/Windows 8/Windows 7/Windows Vista/Windows Server 2016/Windows Server 2012 R2/Windows Server 2012/Windows Server 2008 R2/Windows Server 2008

     Click **Uninstall/Change** or **Uninstall**.
   - ❏ Windows XP/Windows Server 2003 R2/Windows Server 2003

     Click **Change/Remove** or **Remove**.

   Note:
   *If the **User Account Control** window is displayed, click **Continue**.*
7. Follow the on-screen instructions.

Uninstalling Applications - Mac OS

1. Download the Uninstaller using EPSON Software Updater.

   Once you have downloaded the Uninstaller, you do not need to download it again each time you uninstall the application.

2. Press the ⏻ button to turn off the printer.

3. To uninstall the printer driver, select **System Preferences** from the menu > **Printers & Scanners** (or **Print & Scan**, **Print & Fax**), and then remove the printer from the enabled printers list.

4. Quit all running applications.

5. Select **Go** > **Applications** > **Epson Software** > **Uninstaller**.

6. Select the application you want to uninstall, and then click **Uninstall**.

   > ***Important:***
   > *The Uninstaller removes all drivers for Epson inkjet printers on the computer. If you use multiple Epson inkjet printers and you only want to delete some drivers, delete all of them first, and then install the necessary printer driver again.*

   Note:
   *If you cannot find the application you want to uninstall in the application list, you cannot uninstall using the Uninstaller. In this situation, select **Go** > **Applications** > **Epson Software**, select the application you want to uninstall, and then drag it to the trash icon.*

Related Information

➡ "Software Update Tools (EPSON Software Updater)" on page 93

Printing Using a Network Service

By using Epson Connect service available on the Internet, you can print from your smartphone, tablet PC, or laptop, anytime and practically anywhere. To use this service, you need to register the user and the printer in Epson Connect.

The features available on the Internet are as follows.

❏ Email Print

When you send an email with attachments such as documents or images to an email address assigned to the printer, you can print that email and the attachments from remote locations such as your home or office printer.

❏ Epson iPrint

This Application is for iOS and Android, and allows you to print from a smart phone or tablet. You can print documents, images, and websites by sending them directly to a printer on the same wireless LAN.

❏ Remote Print Driver

This is a shared driver supported by Remote Print Driver. When printing using a printer in a remote location, you can print by changing the printer on the usual applications window.

See the Epson Connect portal website for details.

Network Service and Software Information

https://www.epsonconnect.com/

http://www.epsonconnect.eu (Europe only)

Solving Problems

Checking the Printer Status

Checking the Error Indicators on the Printer

When an error occurs, the light turns on or flashes. Details of the error are displayed on the computer screen.

: On

: Flashing slowly

: Flashing fast

Light	Situation	Solutions
	No paper is loaded or more than one sheet has been fed at a time.	Load paper and press the or button.
	A paper jam has occurred.	Remove the paper and press the or button.
	Paper remains inside the printer.	Load A4 size paper in the rear paper feed, and then press the button to remove the paper inside. Load paper in the portrait direction.
	Initial ink charging may not be complete.	See the *Start Here* poster to complete initial ink charging.
	The light and light flash alternately. An ink pad is nearing or at the end of its service life.	The ink pads need to be replaced. Contact Epson or an authorised Epson service provider to replace the ink pad *1. It is not a user-serviceable part. When a message saying that you can continue printing is displayed on the computer, press the or button to continue printing. The lights stop flashing for the time being, however, they will continue to flash at regular intervals until the ink pad is replaced.
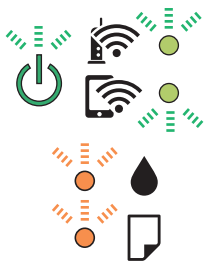	A printer error has occurred.	Open the scanner unit and remove any paper or protective material inside the printer. Turn the power off and on again. If the error continues to occur after turning the power off and on again, contact Epson support.

Light	Situation	Solutions
	Wi-Fi connection error has occurred.	Press the Wi-Fi button to clear the error and try again.
	The printer has started in recovery mode because the firmware update failed.	Follow the steps below to try to update the firmware again. 1. Connect the computer and the printer with a USB cable. (During recovery mode, you cannot update the firmware over a network connection.) 2. Visit your local Epson website for further instructions.
	❏ The printer was not turned off correctly.* ❏ Because the printer was turned off while operating, the nozzles may have dried and clogged. * The power was turned off with a power strip or breaker, the plug was pulled out of the outlet, or an electrical failure occurred.	❏ After clearing the error by pressing the or button, we recommend performing a nozzle check. Cancel any pending print jobs. ❏ To turn off the printer, make sure you press the button.

*1 In some print cycles a very small amount of surplus ink may be collected in the ink pad. To prevent ink leakage from the pad, the printer is designed to stop printing when the pad has reached its limit. Whether and how often this is required will vary according to the number of pages you print, the type of material that you print and the number of cleaning cycles that the printer performs. The need for replacement of the pad does not mean that your printer has ceased to operate in accordance with its specifications. The printer will advise you when the pad requires replacing and this can only be performed by an authorised Epson Service provider. The Epson warranty does not cover the cost of this replacement.

Related Information

➡ "Contacting Epson Support" on page 138

➡ "Installing the Latest Applications" on page 94

Checking the Printer Status - Windows

1. Access the printer driver window.
2. Click **EPSON Status Monitor 3** on the **Maintenance** tab.

Note:

❏ *You can also check the printer status by double-clicking the printer icon on the taskbar. If the printer icon is not added to the taskbar, click* ***Monitoring Preferences*** *on the* ***Maintenance*** *tab, and then select* ***Register the shortcut icon to the taskbar****.*

❏ *If* ***EPSON Status Monitor 3*** *is disabled, click* ***Extended Settings*** *on the* ***Maintenance*** *tab, and then select* ***Enable EPSON Status Monitor 3****.*

Related Information

➡ "Accessing the Printer Driver" on page 40

Checking the Printer Status - Mac OS

1. Select **System Preferences** from the menu > **Printers & Scanners** (or **Print & Scan**, **Print & Fax**), and then select the printer.
2. Click **Options & Supplies** > **Utility** > **Open Printer Utility**.
3. Click **EPSON Status Monitor**.

   You can check the printer status, ink levels, and error status.

Checking the Software Status

You may be able to clear the problem by updating the software to the latest version. To check the software status, use the software update tool.

Related Information

➡ "Software Update Tools (EPSON Software Updater)" on page 93

➡ "Installing the Latest Applications" on page 94

Removing Jammed Paper

Check the error displayed on the control panel and follow the instructions to remove the jammed paper including any torn pieces. Next, clear the error.

Important:

- ❏ *Remove the jammed paper carefully. Removing the paper vigorously may cause damage to the printer.*
- ❏ *When removing jammed paper, avoid tilting the printer, placing it vertically, or turning it upside down; otherwise ink may leak.*

Related Information

➡ "Checking the Error Indicators on the Printer" on page 98

Removing Jammed Paper from the Rear Paper Feed

Remove the jammed paper.

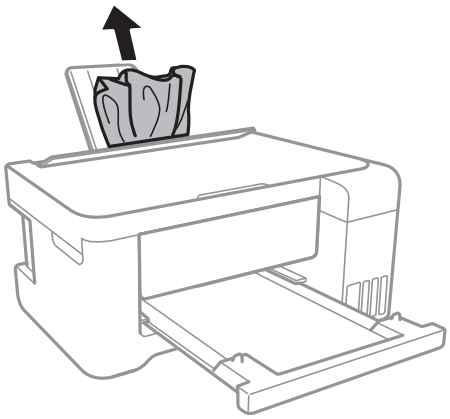

Removing Jammed Paper from Inside the Printer

> ⚠ ***Caution:***
>
> ❏ *Be careful not to trap your hand or fingers when opening or closing the scanner unit. Otherwise you may be injured.*
>
> ❏ *Never touch the buttons on the control panel while your hand is inside the printer. If the printer starts operating, it could cause an injury. Be careful not to touch the protruding parts to avoid injury.*

1. Open the scanner unit with the document cover closed.

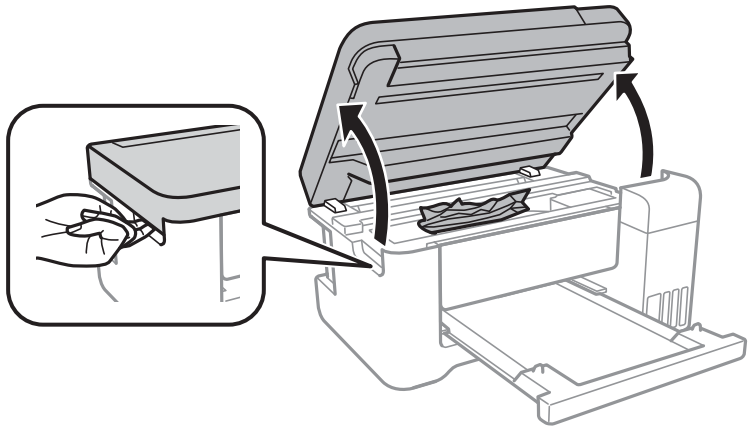

2. Remove the jammed paper.

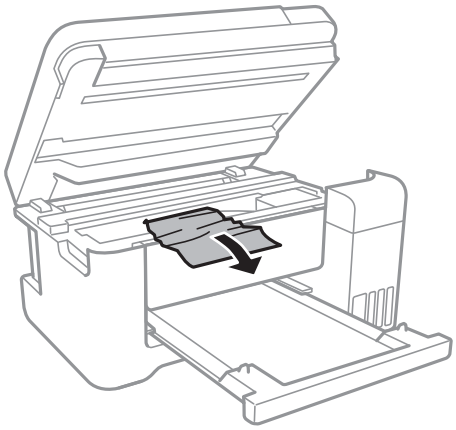

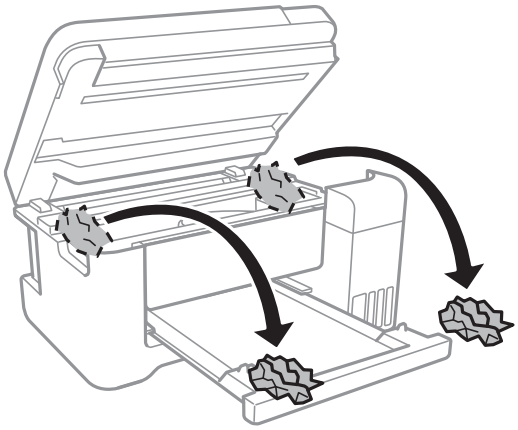

Important:

Do not touch the white flat cable, translucent film, and ink tubes inside the printer. Doing so may cause a malfunction.

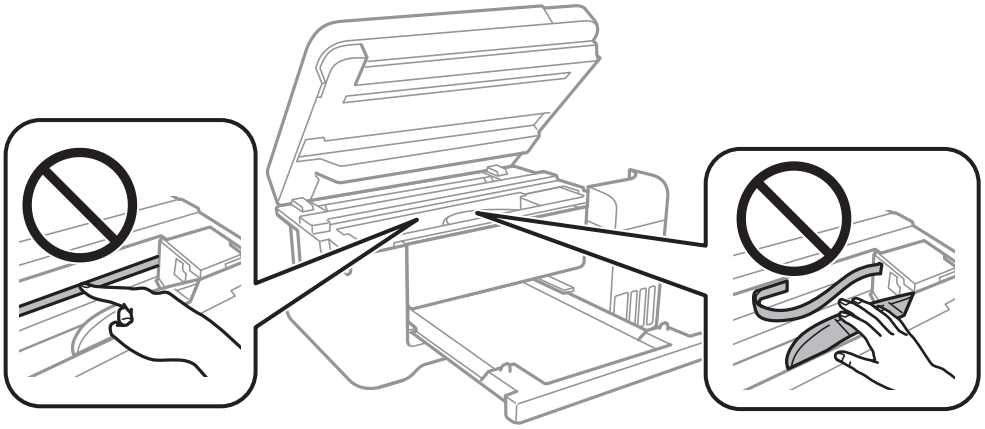

3. Close the scanner unit.

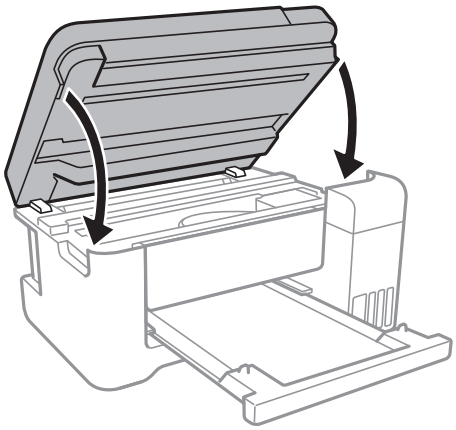

Paper Does Not Feed Correctly

Check the following points, and then take the appropriate actions to solve the problem.

- ❏ Place the printer on a flat surface and operate in the recommended environmental conditions.
- ❏ Use paper supported by this printer.
- ❏ Follow the paper handling precautions.
- ❏ Do not load more than the maximum number of sheets specified for the paper. For plain paper, do not load above the line indicated by the triangle symbol on the edge guide.
- ❏ Do not place objects on the feeder guard.

Related Information

- ➡ "Environmental Specifications" on page 131
- ➡ "Paper Handling Precautions" on page 32
- ➡ "Available Paper and Capacities" on page 31
- ➡ "List of Paper Type" on page 36

Paper Jams

- ❏ Load paper in the correct direction, and slide the edge guides against the edges of the paper.
- ❏ Load one sheet of paper at a time if you have loaded several sheets of paper.

Related Information

- ➡ "Removing Jammed Paper" on page 100
- ➡ "Loading Paper in the Rear Paper Feed" on page 33

Paper Feeds at a Slant

Load paper in the correct direction, and slide the edge guides against the edges of the paper.

Related Information

- ➡ "Loading Paper in the Rear Paper Feed" on page 33

Several Sheets of Paper are Fed at a Time

- ❏ Load one sheet of paper at a time.
- ❏ When several sheets of paper are fed at a time during manual 2-sided printing, remove any paper which is loaded in the printer before you reload the paper.

Paper Out Error Occurs

When a paper out error occurs although paper is loaded in the rear paper feed, reload paper in the center of the rear paper feed.

Paper is Ejected During Printing

When you load letterhead paper (paper on which information such as the sender's name or corporation name are pre-printed in the header), select **Letterhead** as the paper type setting.

Power and Control Panel Problems

Power Does Not Turn On

❏ Make sure the power cord is securely plugged in.

❏ Hold down the ⏻ button for a little longer.

Power Does Not Turn Off

Hold down the ⏻ button for a little longer. If you still cannot turn off the printer, unplug the power cord. To prevent the print head from drying out, turn the printer back on and turn it off by pressing the ⏻ button.

Power Turns Off Automatically

❏ Windows

Click **Printer and Option Information** on the printer driver's **Maintenance** tab.

❏ Disable the **Power Off If Inactive** and **Power Off If Disconnected** settings.

❏ Disable the **Power Off Timer** setting.

❏ Mac OS

Select **System Preferences** from the  menu > **Printers & Scanners** (or **Print & Scan**, **Print & Fax**), and then select the printer. Click **Options & Supplies** > **Utility** > **Open Printer Utility**, and then click **Printer Settings**.

❏ Disable the **Power Off If Inactive** and **Power Off If Disconnected** settings.

❏ Disable the **Power Off Timer** setting.

Note:
*Your product may have the **Power Off Timer** feature or **Power Off If Inactive** and **Power Off If Disconnected** features depending on the location of purchase.*

Cannot Print from a Computer

Checking the Connection (USB)

❏ Connect the USB cable securely to the printer and the computer.

❏ If you are using a USB hub, try to connect the printer directly to the computer.

❏ If the USB cable cannot be recognized, change the port, or change the USB cable.

❏ If the printer cannot print using a USB connection, try the following.

Disconnect the USB cable from the computer. Right-click on the printer icon displayed on the computer, and then select **Remove Device**. Next, connect the USB cable to the computer and try a test print.

Re-set the USB connection by following the steps in this manual for changing the connection method to a computer. See the related information link below for details.

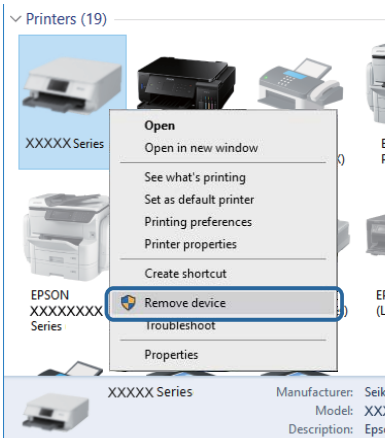

Related Information

➡ "Changing the Connection Method to a Computer" on page 29

Checking the Connection (Network)

❏ When you have changed your access point or provider, try making network settings for the printer again. Connect the computer or smart device to the same SSID as the printer.

❏ Turn off the devices you want to connect to the network. Wait for about 10 seconds, and then turn on the devices in the following order; access point, computer or smart device, and then printer. Move the printer and computer or smart device closer to the access point to help with radio wave communication, and then try to make network settings again.

❏ Print the network connection report. See the related information link below for details. If the report shows that the network connection failed, check the network connection report and then follow the printed solutions.

❏ If the IP address assigned to the printer is 169.254.XXX.XXX, and the subnet mask is 255.255.0.0, the IP address may not be assigned correctly. Restart the access point or reset the network settings for the printer. If this does not solve the problem, see the documentation for the access point.

❏ Try accessing any website from your computer to make sure that your computer's network settings are correct. If you cannot access any website, there is a problem on the computer. Check the network connection of the computer.

Related Information

➡ “Connecting to a Computer” on page 17

➡ “Printing a Network Connection Report” on page 22

Checking the Software and Data

❏ Make sure that a genuine Epson printer driver is installed. If a genuine Epson printer driver is not installed, the available functions are limited. We recommend using a genuine Epson printer driver. See the related information link below for details.

❏ If you are printing a large data size image, the computer may run out of memory. Print the image at a lower resolution or a smaller size.

Related Information

➡ “Checking for Genuine Epson Printer Drivers” on page 106

➡ “Installing the Latest Applications” on page 94

Checking for Genuine Epson Printer Drivers

You can check if a genuine Epson printer driver is installed on your computer by using one of the following methods.

Windows

Select **Control Panel** > **View devices and printers** (**Printers**, **Printers and Faxes**), and then do the following to open the print server properties window.

❏ Windows 10/Windows 8.1/Windows 8/Windows 7/Windows Server 2016/Windows Server 2012 R2/Windows Server 2012/Windows Server 2008 R2

Click the printer icon, and then click **Print server properties** at the top of the window.

❏ Windows Vista/Windows Server 2008

Right-click on the **Printers** folder, and then click **Run as administrator** > **Server Properties**.

❏ Windows XP/Windows Server 2003 R2/Windows Server 2003

From the **File** menu, select **Server Properties**.

Click the **Driver** tab. If your printer name is displayed in the list, a genuine Epson printer driver is installed on your computer.

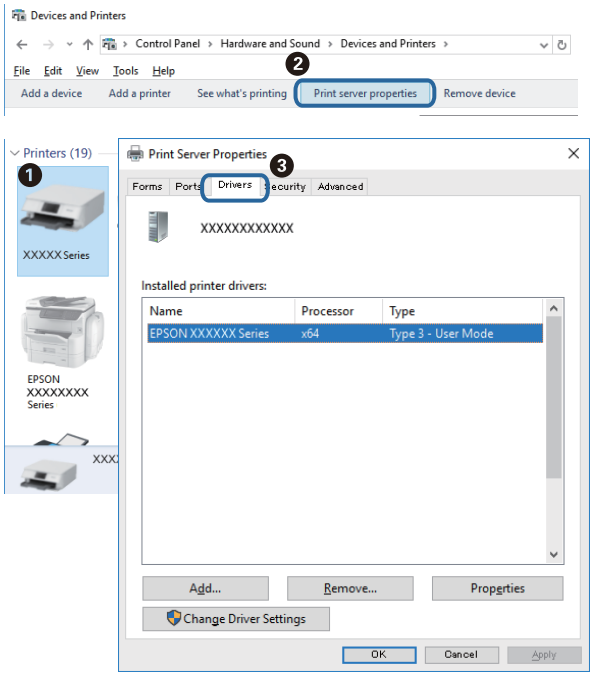

Mac OS

Select **System Preferences** from the menu > **Printers & Scanners** (or **Print & Scan**, **Print & Fax**), and then select the printer. Click **Options & Supplies**, and if the **Options** tab and **Utility** tab are displayed on the window, a genuine Epson printer driver is installed on your computer.



Related Information

➡ "Installing the Latest Applications" on page 94

Checking the Printer Status from the Computer (Windows)

Click **Print Queue** on the printer driver's **Maintenance** tab, and then check the following.

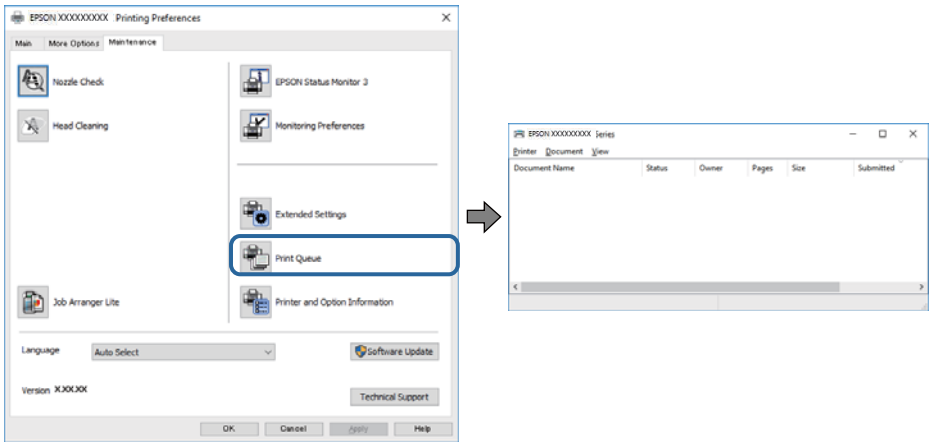

❏ Check if there are any paused print jobs.

If unnecessary data remains, select **Cancel all documents** from the **Printer** menu.

❏ Make sure the printer is not offline or pending.

If the printer is offline or pending, clear the offline or pending setting from the **Printer** menu.

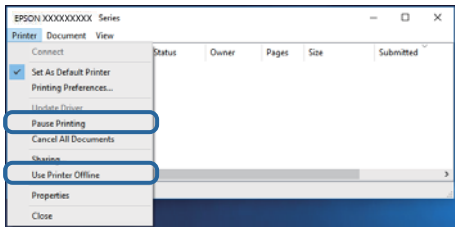

❏ Make sure the printer is selected as the default printer from the **Printer** menu (there should be a check mark on the menu item).

If the printer is not selected as the default printer, set it as the default printer. If there are multiple icons in **Control Panel** > **View devices and printers** (**Printers**, **Printers and Faxes**), see the following to select the icon.

Example)

USB connection: EPSON XXXX Series

Network connection: EPSON XXXX Series (network)

If you install the printer driver multiple times, copies of printer driver may be created. If copies such as "EPSON XXXX Series (copy 1)" are created, right-click the copied driver icon, and then click **Remove Device**.

❏ Make sure the printer port is selected correctly in **Property** > **Port** from the **Printer** menu as follows.

Select "**USBXXX**" for a USB connection, or "**EpsonNet Print Port**" for a network connection.

Checking the printer status from the computer (Mac OS)

Make sure the printer status is not **Pause**.

Select **System Preferences** from the menu > **Printers & Scanners** (or **Print & Scan**, **Print & Fax**), and then double-click the printer. If the printer is paused, click **Resume** (or **Resume Printer**).

When You Cannot Make Network Settings

❏ Turn off the devices you want to connect to the network. Wait for about 10 seconds, and then turn on the devices in the following order; access point, computer or smart device, and then printer. Move the printer and computer or smart device closer to the access point to help with radio wave communication, and then try to make network settings again.

❏ Press the button to print the network connection report. Check it and then follow the printed solutions.

Related Information

➡ “Printing a Network Connection Report” on page 22

➡ “Messages and Solutions on the Network Connection Report” on page 23

Cannot Connect from Devices Even Though Network Settings are No Problems

If you cannot connect from the computer or smart device to the printer even though the network connection report does not show any problems, see the following.

❏ When you are using multiple access points at the same time, you may not be able to use the printer from the computer or smart device depending on the settings of the access points. Connect the computer or smart device to the same access point as the printer.

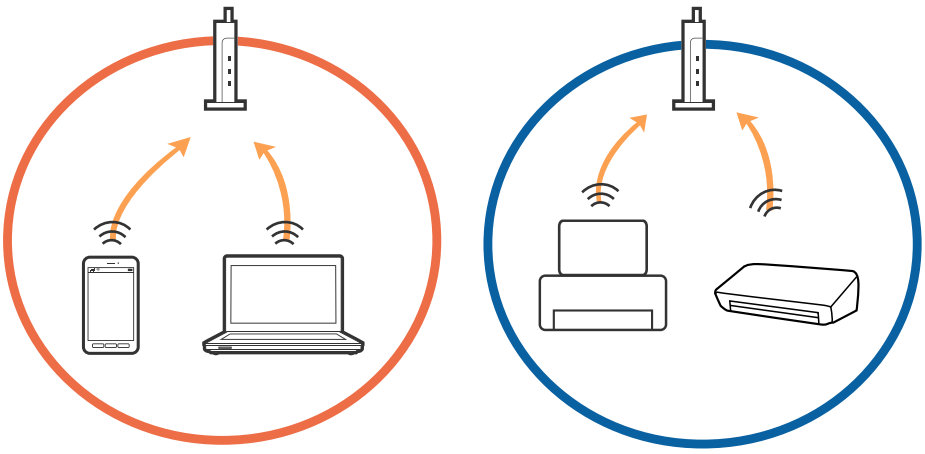

❏ You may not be able to connect to the access point when the access point has multiple SSIDs and devices are connected to different SSIDs on the same access point. Connect the computer or smart device to the same SSID as the printer.

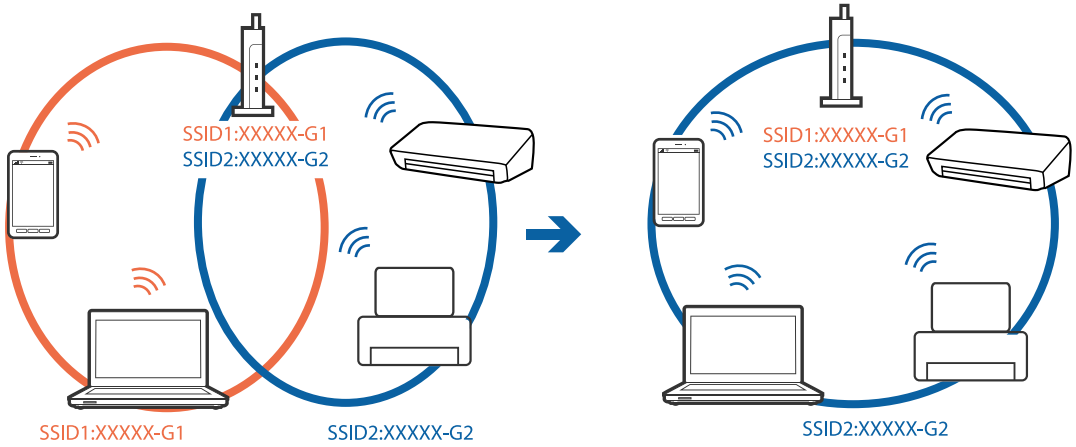

❏ An access point that is compliant with both IEEE802.11a and IEEE802.11g has SSIDs of 2.4 GHz and 5 GHz. If you connect the computer or smart device to a 5 GHz SSID, you cannot connect to the printer because the printer only supports communication over 2.4 GHz. Connect the computer or smart device to the same SSID as the printer.

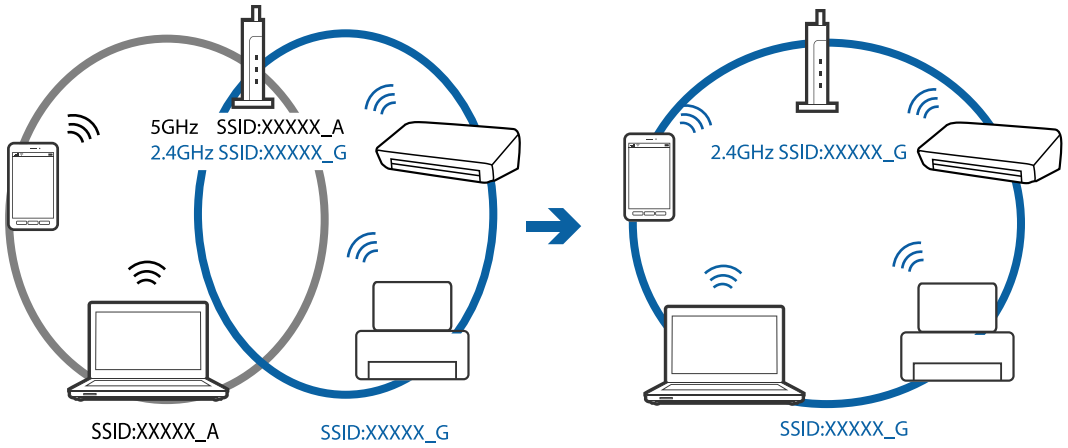

❏ Most access points have a privacy separator feature that blocks communication between connected devices. If you cannot communicate between the printer and the computer or smart device even if they are connected to the same network, disable the privacy separator on the access point. See the manual provided with the access point for details.

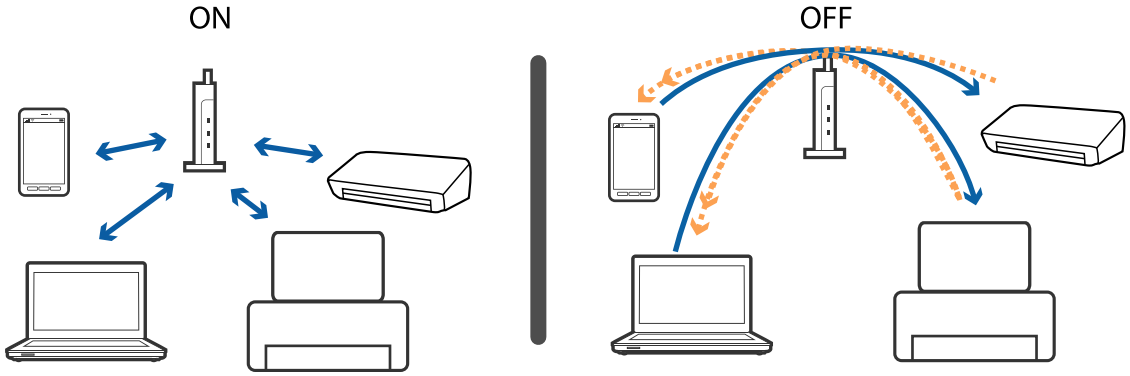

Related Information

➡ “Checking the SSID Connected to the Printer” on page 112

➡ “Checking the SSID for the Computer” on page 113

When You Cannot Connect Using Wi-Fi Direct (Simple AP) Connection

If four devices have already been connected, you cannot connect any more devices. See the following and try to re-connect.

Check how many devices are connected

Check how many devices are connected to the printer. If the number of connected devices has not exceeded the maximum, a connection error may have occurred. Move the printer and computer or smart device closer to the access point to help with radio wave communication, check that the SSID and password are correct, and then try to make network settings again.

❏ Network status sheet

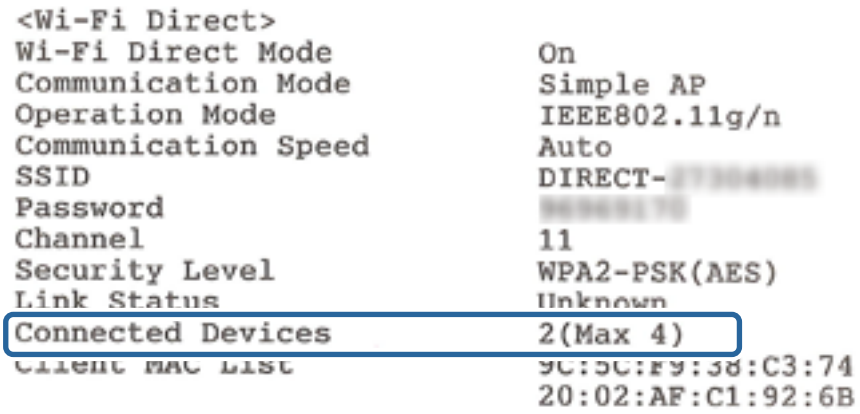

❏ Product status screen for Web Config

Launch a web browser from the connected device, and then enter the IP address for Wi-Fi Direct (Simple AP) to open Web Config. Tap **Product Status** > **Wi-Fi Direct** and check the Wi-Fi Direct status.



Disconnect unnecessary devices

If four devices have already been connected to the printer, disconnect the unnecessary devices and try to connect the new device.

Delete the SSID for Wi-Fi Direct on the Wi-Fi screen for the device that you do not need to connect to the printer.

Related Information

➡ “Printing a Network Status Sheet” on page 29

➡ “Application for Configuring Printer Operations (Web Config)” on page 89

Checking the SSID Connected to the Printer

You can check the SSID by printing a network connection report, network status sheet, or on Web Config.

Checking the SSID for the Computer

Windows

Click  in the task tray on the desktop. Check the name of the connected SSID from the list displayed.



Mac OS

Click the Wi-Fi icon at the top of the computer screen. A list of SSIDs is displayed and the connected SSID is indicated with a check mark.



Printout Problems

Printout is Scuffed or Color is Missing

❏ If you have not used the printer for a long time, the print head nozzles may be clogged and ink drops may not be discharged. Perform a nozzle check, and then clean the print head if any of the print head nozzles are clogged.

❏ If you printed when the ink levels were too low to be seen in the ink tank windows, refill the ink tanks to the upper lines and then use the **Power Cleaning** utility to replace the ink inside the ink tubes. After you use the utility, perform a nozzle check to see if print quality has improved.

Related Information

➡ "Checking and Cleaning the Print Head" on page 81

➡ "Refilling the Ink Tanks" on page 76

➡ "Running Power Cleaning" on page 82

Banding or Unexpected Colors Appear

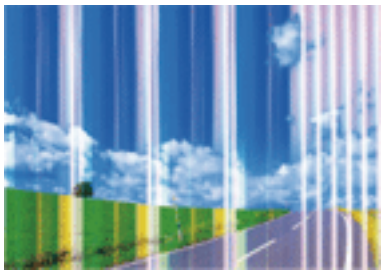

The print head nozzles may be clogged. Perform a nozzle check to check if the print head nozzles are clogged. Clean the print head if any of the print head nozzles are clogged.

Related Information

➡ "Checking and Cleaning the Print Head" on page 81

Colored Banding Appears at Intervals of Approximately 2.5 cm

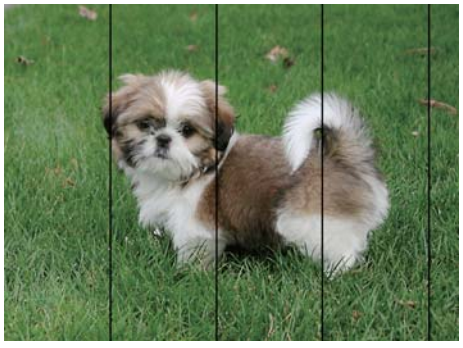

❏ Select the appropriate paper type setting for the type of paper loaded in the printer.

❏ Align the print head from a computer.

❏ When printing on plain paper, print using a higher quality setting.

Related Information

➡ "List of Paper Type" on page 36

➡ "Aligning the Print Head" on page 84

Blurry Prints, Vertical Banding, or Misalignment



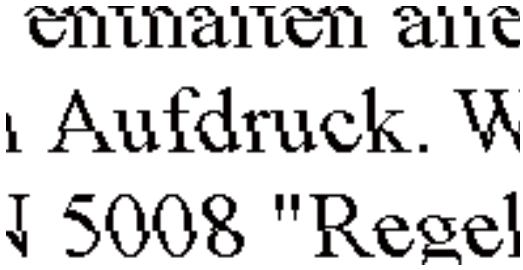

Align the print head.

Related Information

➡ "Aligning the Print Head" on page 84

Print Quality Does Not Improve Even After Aligning the Print Head

During bidirectional (or high speed) printing, the print head prints while moving in both directions, and vertical lines may be misaligned. If print quality does not improve, disable the bidirectional (or high speed) setting. Disabling this setting may slow down printing speed.

❏ Windows

Clear **High Speed** on the printer driver's **More Options** tab.

❏ Mac OS

Select **System Preferences** from the menu > **Printers & Scanners** (or **Print & Scan**, **Print & Fax**), and then select the printer. Click **Options & Supplies** > **Options** (or **Driver**). Select **Off** as the **High Speed Printing** setting.

Print Quality is Poor

Check the following if the print quality is poor due to blurry prints, banding, missing colors, faded colors, and misalignment in the prints.

Checking the printer

❏ Make sure the initial ink charging is complete.

❏ Refill the ink tank if the ink level is below the lower line.

❏ Perform a nozzle check, and then clean the print head if any of the print head nozzles are clogged.

❏ Align the print head.

Checking the paper

❏ Use paper supported by this printer.

❏ Do not print on paper that is damp, damaged, or too old.

❏ If the paper is curled or the envelope is puffed up, flatten it.

❏ Do not stack the paper immediately after printing.

❏ Dry the printouts completely before filing or displaying them. When drying the printouts, avoid direct sun light, do not use a dryer, and do not touch the printed side of paper.

❏ When printing images or photos, Epson recommends using genuine Epson paper rather than plain paper. Print on the printable side of the genuine Epson paper.

Checking the print settings

❏ Select the appropriate paper type setting for the type of paper loaded in the printer.

❏ Print using a higher quality setting.

Checking the ink bottle

❏ Use ink bottles with the correct part code for this printer.

❏ Epson recommends using the ink bottle before the date printed on the package.

❏ Try to use genuine Epson ink bottles. This product is designed to adjust colors based on the use of genuine Epson ink bottles. The use of non-genuine ink bottles may cause print quality to decline.

Related Information

➡ “Checking and Cleaning the Print Head” on page 81

➡ “Aligning the Print Head” on page 84

➡ “Available Paper and Capacities” on page 31

➡ “List of Paper Type” on page 36

➡ “Paper Handling Precautions” on page 32

Paper Is Smeared or Scuffed

❏ When horizontal banding appears or the top or bottom of the paper is smeared, load paper in the correct direction and slide the edge guides to the edges of the paper.

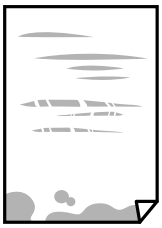

❏ When vertical banding appears or the paper is smeared, clean the paper path.

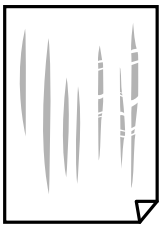

❏ When the problem cannot be cleared after cleaning the paper path, the part inside the printer that is shown in the illustration is smeared. Turn off the printer, and then wipe off the ink using a cotton swab.

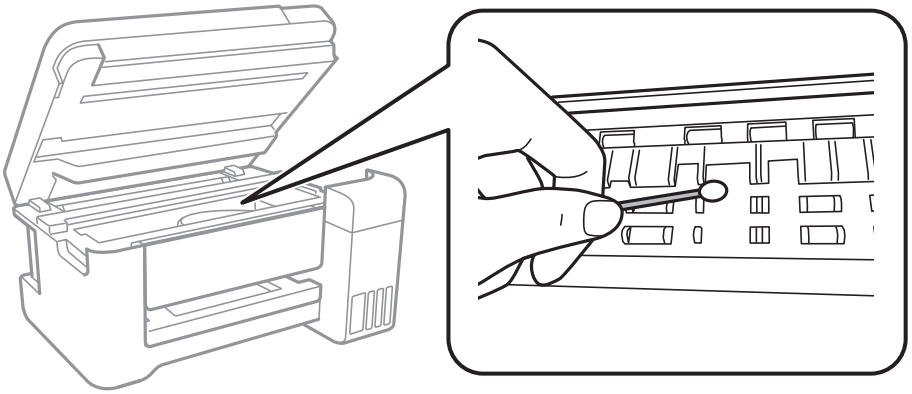

Do not touch the white flat cable, translucent film, and ink tubes inside the printer. Doing so may cause a malfunction.

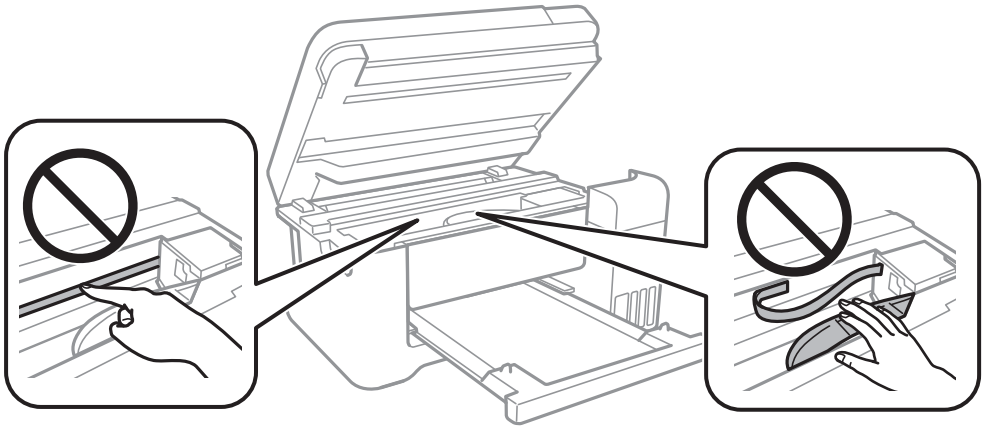

❏ Place the paper on a flat surface to check if it is curled. If it is, flatten it.

❏ When performing manual 2-sided printing, make sure that the ink is completely dry before reloading the paper.

Related Information

➡ "Loading Paper in the Rear Paper Feed" on page 33

➡ "Cleaning the Paper Path for Ink Smears" on page 85

Printed Photos are Sticky

You may be printing on the wrong side of the photo paper. Make sure you are printing on the printable side.

When printing on the wrong side of the photo paper, you need to clean the paper path.

Related Information

➡ "Cleaning the Paper Path for Ink Smears" on page 85

Images or Photos are Printed in Unexpected Colors

When printing from the Windows printer driver, the Epson auto photo adjustment setting is applied by default depending on the paper type. Try change the setting.

On the **More Options** tab, select **Custom** in **Color Correction**, and then click **Advanced**. Change the **Scene Correction** setting from **Auto Correct** to any other option. If changing the setting does not work, use any color correction method other than **PhotoEnhance** in **Color Management**.

Related Information

➡ "Adjusting the Print Color" on page 54

Cannot Print Without Margins

Make borderless setting in the print settings. If you select a paper type that does not support borderless printing, you cannot select **Borderless**. Select a paper type that supports borderless printing.

Edges of the Image are Cropped During Borderless Printing

During borderless printing, the image is slightly enlarged and the protruding area is cropped. Select a smaller enlargement setting.

❏ Windows

Click **Settings** next to the **Borderless** checkbox on the printer driver's **Main** tab, and then change the settings.

❏ Mac OS

Change the **Expansion** setting from the print dialog's **Print Settings** menu.

The Position, Size, or Margins of the Printout Are Incorrect

❏ Load paper in the correct direction, and slide the edge guides against the edges of the paper.

❏ When placing the originals on the scanner glass, align the corner of the original with the corner indicated by a symbol on the frame of the scanner glass. If the edges of the copy are cropped off, move the original slightly away from the corner.

❏ When placing the originals on the scanner glass, clean the scanner glass and the document cover. If there is dust or stains on the glass, the copy area may extend to include the dust or stains, resulting in the wrong copying position or small images.

❏ Select the appropriate paper size setting.

❏ Adjust the margin setting in the application so that it falls within the printable area.

Related Information

➡ "Loading Paper in the Rear Paper Feed" on page 33
➡ "Placing Originals on the Scanner Glass" on page 37
➡ "Cleaning the Scanner Glass" on page 85
➡ "Printable Area" on page 127

Printed Characters Are Incorrect or Garbled

❏ Connect the USB cable securely to the printer and the computer.

❏ Cancel any paused print jobs.

❏ Do not put the computer manually into the **Hibernate** mode or the **Sleep** mode while printing. Pages of garbled text may be printed next time you start the computer.

❏ If you use the printer driver you had previously used, printed characters may be garbled. Make sure that the printer driver you are using is for this printer. Check the printer name on the top of the printer driver window.

The Printed Image Is Inverted

Clear any mirror image settings in the printer driver or the application.

❏ Windows

Clear **Mirror Image** on the printer driver's **More Options** tab.

❏ Mac OS

Clear **Mirror Image** from the print dialog's **Print Settings** menu.

Mosaic-Like Patterns in the Prints

When printing images or photos, print using high-resolution data. Images on websites are often low resolution although they look good enough on the display, and so print quality may decline.

Uneven Colors, Smears, Dots, or Straight Lines Appear in the Copied Image

❏ Clean the paper path.

❏ Clean the scanner glass.

❏ Do not press too hard on the original or the document cover when you are placing the originals on the scanner glass.

Related Information

➡ "Cleaning the Paper Path for Ink Smears" on page 85
➡ "Cleaning the Scanner Glass" on page 85

Moiré (Cross-Hatch) Patterns Appear in the Copied Image

Place the original at a slightly different angle.

Banding Appears on the Copied Image

If you press the ⓥ and the  or  buttons simultaneously, the printer copies in draft mode and banding may appear on the printout.

An Image of the Reverse Side of the Original Appears in the Copied Image

For a thin original, place the original on the scanner glass and then place a piece of black paper over it.

The Printout Problem Could Not be Cleared

If you have tried all of the solutions and have not solved the problem, try uninstalling and then reinstalling the printer driver.

Related Information

➡ "Uninstalling Applications" on page 95

➡ "Installing the Latest Applications" on page 94

Other Printing Problems

Printing Is Too Slow

❏ Close any unnecessary applications.

❏ Lower the quality setting. High quality printing slows down the printing speed.

❏ Enable the bidirectional (or high speed) setting. When this setting is enabled, the print head prints while moving in both directions, and the printing speed increases.

- ❏ Windows

  Select **High Speed** on the printer driver's **More Options** tab.

- ❏ Mac OS

  Select **System Preferences** from the  menu > **Printers & Scanners** (or **Print & Scan**, **Print & Fax**), and then select the printer. Click **Options & Supplies** > **Options** (or **Driver**). Select **On** as the **High Speed Printing** setting.

❏ Disable quiet mode. This feature slows down the printing speed.

❏ Windows

Select **Off** as the **Quiet Mode** setting on the printer driver's **Main** tab.

❏ Mac OS

Select **System Preferences** from the menu > **Printers & Scanners** (or **Print & Scan**, **Print & Fax**), and then select the printer. Click **Options & Supplies** > **Options** (or **Driver**). Select **Off** as the **Quiet Mode** setting.

Printing Slows Down Dramatically During Continuous Printing

Printing slows down to prevent the printer mechanism from overheating and being damaged. However, you can continue printing. To return to normal printing speed, leave the printer idle for at least 30 minutes. Printing speed does not return to normal if the power is off.

Cannot Start Scanning

❏ Connect the USB cable securely to the printer and the computer. If you are using a USB hub, try to connect the printer directly to the computer.

❏ If you scan at a high resolution over a network, a communication error may occur. Lower the resolution.

❏ Make sure that the correct printer (scanner) is selected on Epson Scan 2.

Check whether or not the printer is recognized when using Windows

In Windows, make sure the printer (scanner) is displayed in **Scanner and Camera**. The printer (scanner) should be displayed as "EPSON XXXXX (printer name)". If the printer (scanner) is not displayed, uninstall and then re-install Epson Scan 2. See the following to access **Scanner and Camera**.

❏ Windows 10

Right-click the start button or press and hold it, select **Control Panel**, enter "Scanner and Camera" in the search charm, click **View scanners and cameras**, and then check if the printer is displayed.

❏ Windows 8.1/Windows 8/Windows Server 2012 R2/Windows Server 2012

Select **Desktop** > **Settings** > **Control Panel**, enter "Scanner and Camera" in the search charm, click **Show Scanner and Camera**, and then check if the printer is displayed.

❏ Windows 7/Windows Server 2008 R2

Click the start button and select **Control Panel**, enter "Scanner and Camera" in the search charm, click **View scanners and cameras**, and then check if the printer is displayed.

❏ Windows Vista/Windows Server 2008

Click the start button, select **Control Panel** > **Hardware and Sound** > **Scanners and Cameras**, and then check if the printer is displayed.

❏ Windows XP/Windows Server 2003 R2/Windows Server 2003

Click the start button, select **Control Panel** > **Printers and Other Hardware** > **Scanner and Cameras**, and then check if the printer is displayed.

Related Information

➡ "Uninstalling Applications" on page 95

➡ "Installing the Latest Applications" on page 94

Scanned Image Problems

Uneven Colors, Dirt, Spots, and so on Appear when Scanning from the Scanner Glass

❏ Clean the scanner glass.

❏ Remove any trash or dirt that adheres to the original.

❏ Do not press with too much force on the original or the document cover. If you press with too much force, blurring, smudges, and spots may occur.

Related Information

➡ "Cleaning the Scanner Glass" on page 85

The Image Quality Is Rough

❏ In Epson Scan 2, adjust the image using items on the **Advanced Settings** tab, and then scan.

❏ If the resolution is low, try increasing the resolution and then scanning.

Related Information

➡ "Scanning Using Epson Scan 2" on page 69

Offset Appears in the Background of Images

Images on the back of the original may appear in the scanned image.

❏ In Epson Scan 2, select the **Advanced Settings** tab, and then adjust the **Brightness**.

This feature may not be available depending on the settings on the **Main Settings** tab > **Image Type** or other settings on the **Advanced Settings** tab.

❏ In Epson Scan 2, select the **Advanced Settings** tab, and then **Image Option** > **Text Enhancement**.

❏ When scanning from the scanner glass, place black paper or a desk pad over the original.

Related Information

➡ "Scanning Using Epson Scan 2" on page 69

➡ "Placing Originals" on page 37

Text is Blurred

❏ In Epson Scan 2, select the **Advanced Settings** tab, and then **Image Option** > **Text Enhancement**.

❏ In Epson Scan 2, when **Image Type** on the **Main Settings** tab is set to **Black & White**, adjust the **Threshold** on the **Advanced Settings** tab. When you increase the **Threshold**, black becomes stronger.

❏ If the resolution is low, try increasing the resolution and then scanning.

Related Information

➡ "Scanning Using Epson Scan 2" on page 69

Moiré Patterns (Web-Like Shadows) Appear

If the original is a printed document, moiré patterns (web-like shadows) may appear in the scanned image.

❏ On the **Advanced Settings** tab in Epson Scan 2, set **Descreening**.



❏ Change the resolution, and then scan again.

Related Information

➡ "Scanning Using Epson Scan 2" on page 69

Cannot Scan the Correct Area on the Scanner Glass

❏ Make sure the original is placed correctly against the alignment marks.

❏ If the edge of the scanned image is missing, move the original slightly away from the edge of the scanner glass.

Related Information

➡ "Placing Originals" on page 37

➡ "Cleaning the Scanner Glass" on page 85

Text is Not Recognized Correctly when Saving as a Searchable PDF

❏ On the **Image Format Options** window in Epson Scan 2, check that **Text Language** is set correctly on the **Text** tab.

❏ Check that the original is placed straight.

❏ Use an original with clear text. Text recognition may decline for the following types of originals.

- ❏ Originals that have been copied a number of times
- ❏ Originals received by fax (at low resolutions)
- ❏ Originals on which the letter spacing or line spacing is too small
- ❏ Originals with ruled lines or underlining over the text
- ❏ Originals with hand-written text
- ❏ Originals with creases or wrinkles

❏ In Epson Scan 2, when **Image Type** on the **Main Settings** tab is set to **Black & White**, adjust the **Threshold** on the **Advanced Settings** tab. When you increase the **Threshold**, the black color area becomes larger.

❏ In Epson Scan 2, select the **Advanced Settings** tab, and then **Image Option** > **Text Enhancement**.

Related Information

➡ "Scanning Using Epson Scan 2" on page 69

Cannot Solve Problems in the Scanned Image

If you have tried all of the solutions and have not solved the problem, initialize the Epson Scan 2 settings using Epson Scan 2 Utility.

Note:
Epson Scan 2 Utility is an application that comes with Epson Scan 2.

1. Start Epson Scan 2 Utility.
   - ❏ Windows 10/Windows Server 2016

     Click the start button, and then select **EPSON** > **Epson Scan 2 Utility**.
   - ❏ Windows 8.1/Windows 8/Windows Server 2012 R2/Windows Server 2012

     Enter the application name in the search charm, and then select the displayed icon.
   - ❏ Windows 7/Windows Vista/Windows XP/Windows Server 2008 R2/Windows Server 2008/Windows Server 2003 R2/Windows Server 2003

     Click the start button, and then select **All Programs** or **Programs** > **EPSON** > **Epson Scan 2** > **Epson Scan 2 Utility**.
   - ❏ Mac OS

     Select **Go** > **Applications** > **Epson Software** > **Epson Scan 2 Utility**.
2. Select the **Other** tab.
3. Click **Reset**.

   Note:
   If initialization does not solve the problem, uninstall and re-install Epson Scan 2.

Related Information

➡ "Uninstalling Applications" on page 95

➡ "Installing the Latest Applications" on page 94

Other Scanning Problems

Scanning Speed Is Slow

❏ Lower the resolution, and then scan again. When the resolution is high, scanning may take some time.

❏ The scanning speed may be reduced depending on the image adjustment features in Epson Scan 2.

❏ On the **Configuration** screen which is displayed by clicking the button in Epson Scan 2, if you set **Quiet Mode** on the **Scan** tab, the scanning speed may be reduced.

Related Information

➡ "Scanning Using Epson Scan 2" on page 69

Scanning Stops when Scanning to PDF/Multi-TIFF

❏ When scanning using Epson Scan 2, you can continuously scan up to 999 pages in PDF format and up to 200 pages in Multi-TIFF format.

❏ When scanning large volumes, we recommend scanning in grayscale.

❏ Increase the free space on the computer's hard disk. Scanning may stop if there is not enough free space.

❏ Try scanning at a lower resolution. Scanning stops if the total data size reaches the limit.

Related Information

➡ "Scanning Using Epson Scan 2" on page 69

Other Problems

Slight Electric Shock when Touching the Printer

If many peripherals are connected to the computer, you may feel a slight electric shock when touching the printer. Install a ground wire to the computer that is connected to the printer.

Operation Sounds Are Loud

If operations sounds are too loud, enable **Quiet Mode**. Enabling this feature may reduce printing speed.

❏ Windows printer driver

Enable **Quiet Mode** on the **Main** tab.

❏ Mac OS printer driver

Select **System Preferences** from the menu > **Printers & Scanners** (or **Print & Scan**, **Print & Fax**), and then select the printer. Click **Options & Supplies** > **Options** (or **Driver**). Select **On** as the **Quiet Mode** setting.

❏ Epson Scan 2

Click the button to open the **Configuration** window. Next, set the **Quiet Mode** on the **Scan** tab.

Application Is Blocked by a Firewall (for Windows Only)

Add the application to the Windows Firewall allowed program in security settings on the **Control Panel**.

Ink Spilled

❏ If ink adheres to the area around the tank, wipe it off using a napless, clean cloth or cotton swab.

❏ If ink spills on the desk or floor, wipe it off immediately. When ink is dried, it will be difficult to remove the smear. To prevent the smear from spreading, blot the ink with a dry cloth, and then wipe it with a moist cloth.

❏ If ink gets on your hands, wash them with water and soap.

Appendix

Technical Specifications

Printer Specifications

Print Head Nozzle Placement		Black ink nozzles: 180 Color ink nozzles: 59 for each color
Weight of Paper*	Plain Paper	64 to 90 g/m²(17 to 24lb)
	Envelopes	Envelope #10, DL, C6: 75 to 90 g/m² (20 to 24 lb)

* Even when the paper thickness is within this range, the paper may not feed in the printer or the print quality may decline depending on the paper properties or quality.

Printable Area

Printable Area for Single Sheets

Print quality may decline in the shaded areas due to the printer's mechanism.

Printing with borders

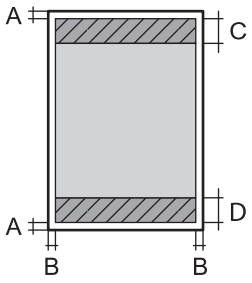

A	3.0 mm (0.12 in.)
B	3.0 mm (0.12 in.)
C	41.0 mm (1.61 in.)
D	37.0 mm (1.46 in.)

Borderless printing

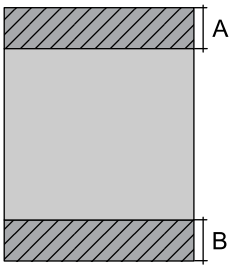

A	44.0 mm (1.73 in.)
B	40.0 mm (1.57 in.)

Printable Area for Envelopes

Print quality may decline in the shaded areas due to the printer's mechanism.

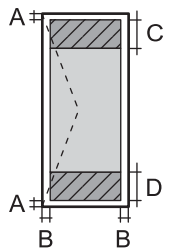

A	3.0 mm (0.12 in.)
B	5.0 mm (0.20 in.)
C	18.0 mm (0.70 in.)
D	41.0 mm (1.61 in.)

Scanner Specifications

Scanner Type	Flatbed
Photoelectric Device	CIS
Effective Pixels	10200×14040 pixels (1200 dpi)
Maximum Document Size	216×297 mm (8.5×11.7 in.) A4, Letter
Scanning Resolution	1200 dpi (main scan) 2400 dpi (sub scan)
Output Resolution	50 to 9600 dpi in 1 dpi increments
Color Depth	Color ❏ 48 bits per pixel internal (16 bits per pixel per color internal) ❏ 24 bits per pixel external (8 bits per pixel per color external) Grayscale ❏ 16 bits per pixel internal ❏ 8 bits per pixel external Black and white ❏ 16 bits per pixel internal ❏ 1 bits per pixel external
Light Source	LED

Interface Specifications

For Computer	Hi-Speed USB

Network Function List

Network Functions and IPv4/IPv6

Functions			Supported	Remarks
Network Printing	EpsonNet Print (Windows)	IPv4	✓	-
	Standard TCP/IP (Windows)	IPv4, IPv6	✓	-
	WSD Printing (Windows)	IPv4, IPv6	✓	Windows Vista or later
	Bonjour Printing (Mac OS)	IPv4, IPv6	✓	-
	IPP Printing (Windows, Mac OS)	IPv4, IPv6	-	-
	UPnP Printing	IPv4	-	Information appliance
	PictBridge Printing (Wi-Fi)	IPv4	-	Digital camera
	Epson Connect (Email Print)	IPv4	✓	-
	Google Cloud Print	IPv4, IPv6	✓	-
Network Scanning	Epson Scan 2	IPv4, IPv6	✓	-
	Event Manager	IPv4	✓	-
	Epson Connect (Scan to Cloud)	IPv4	-	-
	ADF (2-sided scanning)		-	-
Fax	Send a fax	IPv4	-	-
	Receive a fax	IPv4	-	-

Wi-Fi Specifications

Standards	IEEE802.11b/g/n*1*2
Frequency Range	2.4 GHz
Maximum Radio-Frequency Power Transmitted	19.8 dBm (EIRP)
Coordination Modes	Infrastructure, Wi-Fi Direct (Simple AP)*3
Wireless Securities	WEP (64/128bit),WPA2-PSK (AES)*4

*1 Complies with either IEEE 802.11b/g/n or IEEE 802.11b/g depending on location of purchase.

*2 IEEE802.11n is only available for the HT20.

*3 Not supported for IEEE 802.11b.

*4 Complies with WPA2 standards with support for WPA/WPA2 Personal.

Security Protocol

SSL/TLS	HTTPS Server/Client

Supported Third Party Services

Google Cloud Print

Dimensions

Dimensions	Storage ❏ Width: 375 mm (14.8 in.) ❏ Depth: 347 mm (13.7 in.) ❏ Height: 187 mm (7.4 in.) Printing ❏ Width: 375 mm (14.8 in.) ❏ Depth: 567 mm (22.3 in.) ❏ Height: 259 mm (10.2 in.)
Weight*	Approx. 5.0 kg (11.0 lb)

* Without the ink and the power cord.

Electrical Specifications

Model	100 to 240 V Model	220 to 240 V Model
Rated Frequency Range	50 to 60 Hz	50 to 60 Hz
Rated Current	0.4 to 0.2 A	0.2 A
Power Consumption (with USB Connection)	Standalone copying: Approx. 12.0 W (ISO/IEC24712) Ready mode: Approx. 3.9 W Sleep mode: Approx. 0.7 W Power off: Approx. 0.2 W	Standalone copying: Approx. 12.0 W (ISO/IEC24712) Ready mode: Approx. 3.9 W Sleep mode: Approx. 0.7 W Power off: Approx. 0.3 W

Note:

❏ *Check the label on the printer for its voltage.*

❏ *For European users, see the following Website for details on power consumption.*

http://www.epson.eu/energy-consumption

Environmental Specifications

Operation	Use the printer within the range shown in the following graph. 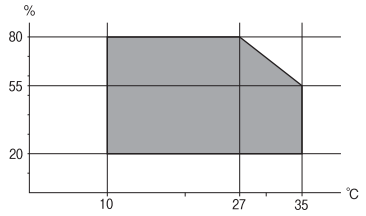 Temperature: 10 to 35°C (50 to 95°F) Humidity: 20 to 80% RH (without condensation)
Storage	Temperature: -20 to 40°C (-4 to 104°F)* Humidity: 5 to 85% RH (without condensation)

* You can store for one month at 40°C (104°F).

Environmental Specifications for Ink Bottles

Storage Temperature	-20 to 40 °C (-4 to 104 °F)*
Freezing Temperature	-15 °C (5 °F) Ink thaws and is usable after approximately 2 hours at 25 °C (77 °F).

* You can store for one month at 40 °C (104 °F).

System Requirements

❏ Windows 10 (32-bit, 64-bit)/Windows 8.1 (32-bit, 64-bit)/Windows 8 (32-bit, 64-bit)/Windows 7 (32-bit, 64-bit)/Windows Vista (32-bit, 64-bit)/Windows XP SP3 or later (32-bit)/Windows XP Professional x64 Edition/Windows Server 2016/Windows Server 2012 R2/Windows Server 2012/Windows Server 2008 R2/Windows Server 2008/Windows Server 2003 R2/Windows Server 2003 SP2 or later

❏ macOS Sierra/OS X El Capitan/OS X Yosemite/OS X Mavericks/OS X Mountain Lion/Mac OS X v10.7.x/Mac OS X v10.6.8

Note:

❏ *Mac OS may not support some applications and features.*

❏ *The UNIX File System (UFS) for Mac OS is not supported.*

Regulatory Information

Standards and Approvals

Standards and Approvals for U.S. Model

Safety	UL60950-1 CAN/CSA-C22.2 No.60950-1
EMC	FCC Part 15 Subpart B Class B CAN/CSA-CEI/IEC CISPR 22 Class B

This equipment contains the following wireless module.

Manufacturer: Askey Computer Corporation

Type: WLU6320-D69 (RoHS)

This product conforms to Part 15 of the FCC Rules and RSS-210 of the IC Rules. Epson cannot accept responsibility for any failure to satisfy the protection requirements resulting from a non-recommended modification of the product. Operation is subject to the following two conditions: (1) this device may not cause harmful interference, and (2) this device must accept any interference received, including interference that may cause undesired operation of the device.

To prevent radio interference to the licensed service, this device is intended to be operated indoors and away from windows to provide maximum shielding. Equipment (or its transmit antenna) that is installed outdoors is subject to licensing.

This equipment complies with FCC/IC radiation exposure limits set forth for an uncontrolled environment and meets the FCC radio frequency (RF) Exposure Guidelines in Supplement C to OET65 and RSS-102 of the IC radio frequency (RF) Exposure rules. This equipment should be installed and operated so that the radiator is kept at least 7.9 inches (20 cm) or more away from a person's body (excluding extremities: hands, wrists, feet and ankles).

Standards and Approvals for European Model

For European users

Hereby, Seiko Epson Corporation declares that the following radio equipment model is in compliance with Directive 2014/53/EU. The full text of the EU declaration of conformity is available at the following website.

http://www.epson.eu/conformity

C634B

For use only in Ireland, UK, Austria, Germany, Liechtenstein, Switzerland, France, Belgium, Luxemburg, Netherlands, Italy, Portugal, Spain, Denmark, Finland, Norway, Sweden, Iceland, Croatia, Cyprus, Greece, Slovenia, Malta, Bulgaria, Czech, Estonia, Hungary, Latvia, Lithuania, Poland, Romania, and Slovakia.

Epson cannot accept responsibility for any failure to satisfy the protection requirements resulting from a non-recommended modification of the products.

CE

Standards and Approvals for Australian Model

EMC	AS/NZS CISPR32 Class B

Epson hereby declares that the following equipment Models are in compliance with the essential requirements and other relevant provisions of AS/NZS4268:

C634B

Epson cannot accept responsibility for any failure to satisfy the protection requirements resulting from a non-recommended modification of the products.

Restrictions on Copying

Observe the following restrictions to ensure the responsible and legal use of the printer.

Copying of the following items is prohibited by law:

- ❏ Bank bills, coins, government-issued marketable securities, government bond securities, and municipal securities
- ❏ Unused postage stamps, pre-stamped postcards, and other official postal items bearing valid postage
- ❏ Government-issued revenue stamps, and securities issued according to legal procedure

Exercise caution when copying the following items:

- ❏ Private marketable securities (stock certificates, negotiable notes, checks, etc.), monthly passes, concession tickets, etc.
- ❏ Passports, driver's licenses, warrants of fitness, road passes, food stamps, tickets, etc.

Note:
Copying these items may also be prohibited by law.

Responsible use of copyrighted materials:

Printers can be misused by improperly copying copyrighted materials. Unless acting on the advice of a knowledgeable attorney, be responsible and respectful by obtaining the permission of the copyright holder before copying published material.

Transporting and Storing the Printer

When you need to store the printer or transport it when moving or for repairs, follow the steps below to pack the printer.

> ⚠ ***Caution:***
> *Be careful not to trap your hand or fingers when opening or closing the scanner unit. Otherwise you may be injured.*

Important:

❏ *When storing or transporting the printer, place the printer in the plastic bag and fold it closed. Avoid tilting the printer, placing it vertically, or turning it upside down; otherwise ink may leak.*

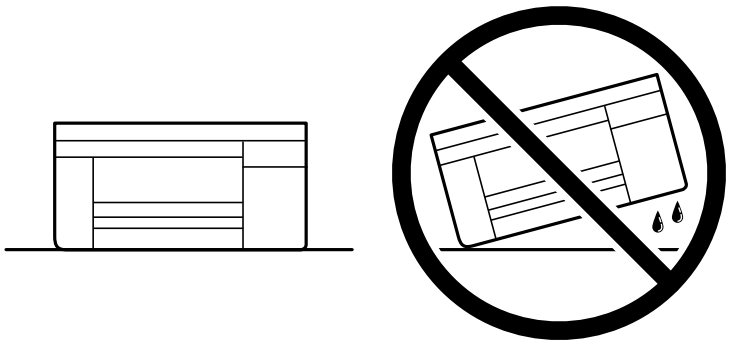

❏ *When storing or transporting an ink bottle, do not tilt the bottle and do not subject it to impacts or temperature changes. Otherwise, ink may leak even if the cap on the ink bottle is tightened securely. Be sure to keep the ink bottle upright when tightening the cap, and take precautions to prevent ink from leaking when transporting the bottle, for example, putting the bottle in a bag.*

❏ *Do not put opened ink bottles in the box with printer.*



1. Turn off the printer by pressing the ⏻ button.
2. Make sure the power light turns off, and then unplug the power cord.

   Important:

   Unplug the power cord when the power light is off. Otherwise, the print head does not return to the home position causing the ink to dry, and printing may become impossible.

3. Disconnect all cables such as the power cord and USB cable.
4. Remove all of the paper from the printer.
5. Make sure there are no originals on the printer.

6. Open the scanner unit with the document cover closed. Secure the print head to the case with tape.

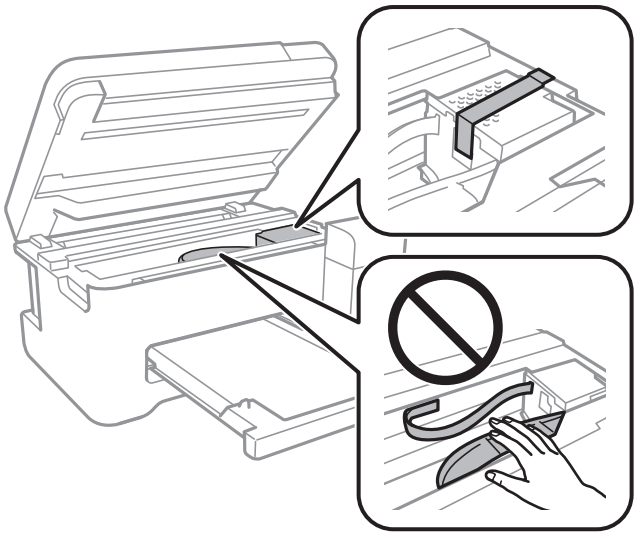

7. Make sure to install the cap onto the ink tank securely.

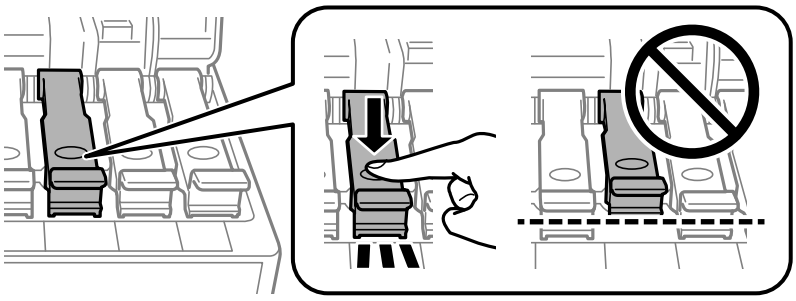

8. Close the Ink Tank Cover securely.

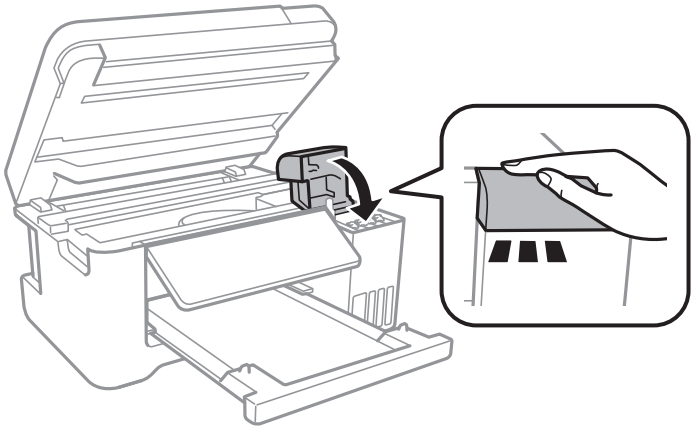

9. Close the scanner unit.

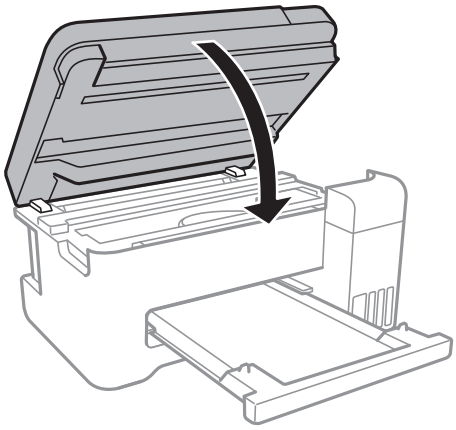

10. Prepare to pack the printer as shown below.

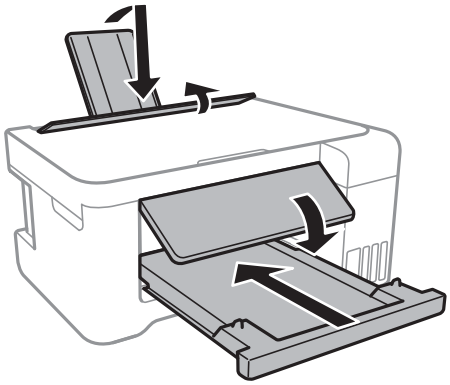

11. Place the printer in the plastic bag and fold it closed.

12. Pack the printer in its box using the protective materials.

> **Important:**
> *Make sure you keep the printer horizontal when transporting or storing the printer by packing it in its box; otherwise ink may leak.*

When you use the printer again, make sure you remove the tape securing the print head. If print quality has declined the next time you print, clean and align the print head.

Related Information

➡ "Part Names and Functions" on page 12

➡ "Checking and Cleaning the Print Head" on page 81

➡ "Aligning the Print Head" on page 84

Copyright

No part of this publication may be reproduced, stored in a retrieval system, or transmitted in any form or by any means, electronic, mechanical, photocopying, recording, or otherwise, without the prior written permission of Seiko Epson Corporation. No patent liability is assumed with respect to the use of the information contained herein. Neither is any liability assumed for damages resulting from the use of the information herein. The information contained herein is designed only for use with this Epson product. Epson is not responsible for any use of this information as applied to other products.

Neither Seiko Epson Corporation nor its affiliates shall be liable to the purchaser of this product or third parties for damages, losses, costs, or expenses incurred by the purchaser or third parties as a result of accident, misuse, or abuse of this product or unauthorized modifications, repairs, or alterations to this product, or (excluding the U.S.) failure to strictly comply with Seiko Epson Corporation's operating and maintenance instructions.

Seiko Epson Corporation and its affiliates shall not be liable for any damages or problems arising from the use of any options or any consumable products other than those designated as Original Epson Products or Epson Approved Products by Seiko Epson Corporation.

Seiko Epson Corporation shall not be held liable for any damage resulting from electromagnetic interference that occurs from the use of any interface cables other than those designated as Epson Approved Products by Seiko Epson Corporation.

© 2022 Seiko Epson Corporation

The contents of this manual and the specifications of this product are subject to change without notice.

Trademarks

- EPSON® is a registered trademark, and EPSON EXCEED YOUR VISION or EXCEED YOUR VISION is a trademark of Seiko Epson Corporation.
- PRINT Image Matching™ and the PRINT Image Matching logo are trademarks of Seiko Epson Corporation. Copyright © 2001 Seiko Epson Corporation. All rights reserved.
- Epson Scan 2 software is based in part on the work of the Independent JPEG Group.
- libtiff

  Copyright © 1988-1997 Sam Leffler

  Copyright © 1991-1997 Silicon Graphics, Inc.

  Permission to use, copy, modify, distribute, and sell this software and its documentation for any purpose is hereby granted without fee, provided that (i) the above copyright notices and this permission notice appear in all copies of the software and related documentation, and (ii) the names of Sam Leffler and Silicon Graphics may not be used in any advertising or publicity relating to the software without the specific, prior written permission of Sam Leffler and Silicon Graphics.

  THE SOFTWARE IS PROVIDED "AS-IS" AND WITHOUT WARRANTY OF ANY KIND, EXPRESS, IMPLIED OR OTHERWISE, INCLUDING WITHOUT LIMITATION, ANY WARRANTY OF MERCHANTABILITY OR FITNESS FOR A PARTICULAR PURPOSE.

  IN NO EVENT SHALL SAM LEFFLER OR SILICON GRAPHICS BE LIABLE FOR ANY SPECIAL, INCIDENTAL, INDIRECT OR CONSEQUENTIAL DAMAGES OF ANY KIND, OR ANY DAMAGES WHATSOEVER RESULTING FROM LOSS OF USE, DATA OR PROFITS, WHETHER OR NOT ADVISED OF THE POSSIBILITY OF DAMAGE, AND ON ANY THEORY OF LIABILITY, ARISING OUT OF OR IN CONNECTION WITH THE USE OR PERFORMANCE OF THIS SOFTWARE.
- QR Code is a registered trademark of DENSO WAVE INCORPORATED in Japan and other countries.
- Intel® is a registered trademark of Intel Corporation.

❏ Microsoft®, Windows®, Windows Server®, and Windows Vista® are registered trademarks of Microsoft Corporation.

❏ Apple, Macintosh, macOS, OS X, Bonjour, ColorSync, Safari, iPad, iPhone, iPod touch, and iTunes are trademarks of Apple Inc., registered in the U.S. and other countries.

❏ Google Cloud Print, Chrome, Chrome OS, Google Play and Android are trademarks of Google Inc.

❏ Adobe and Adobe Reader are either registered trademarks or trademarks of Adobe Systems Incorporated in the United States and/or other countries.

❏ General Notice: Other product names used herein are for identification purposes only and may be trademarks of their respective owners. Epson disclaims any and all rights in those marks.

Where to Get Help

Technical Support Web Site

If you need further help, visit the Epson support website shown below. Select your country or region and go to the support section of your local Epson website. The latest drivers, FAQs, manuals, or other downloadables are also available from the site.

http://support.epson.net/

http://www.epson.eu/Support (Europe)

If your Epson product is not operating properly and you cannot solve the problem, contact Epson support services for assistance.

Contacting Epson Support

Before Contacting Epson

If your Epson product is not operating properly and you cannot solve the problem using the troubleshooting information in your product manuals, contact Epson support services for assistance. If Epson support for your area is not listed below, contact the dealer where you purchased your product.

Epson support will be able to help you much more quickly if you give them the following information:

❏ Product serial number

(The serial number label is usually on the back of the product.)

❏ Product model

❏ Product software version

(Click **About**, **Version Info**, or a similar button in the product software.)

❏ Brand and model of your computer

❏ Your computer operating system name and version

❏ Names and versions of the software applications you normally use with your product

Note:
Depending on the product, network settings may be stored in the product's memory. Due to breakdown or repair of a product, settings may be lost. Epson shall not be responsible for the loss of any data, for backing up or recovering settings even during a warranty period. We recommend that you make your own backup data or take notes.

Help for Users in Europe

Check your Pan-European Warranty Document for information on how to contact Epson support.

Help for Users in Taiwan

Contacts for information, support, and services are:

World Wide Web

http://www.epson.com.tw

Information on product specifications, drivers for download, and products enquiry are available.

Epson HelpDesk

Phone: +886-2-2165-3138

Our HelpDesk team can help you with the following over the phone:

❏ Sales enquiries and product information

❏ Product usage questions or problems

❏ Enquiries on repair service and warranty

Repair service center:

http://www.tekcare.com.tw/branchMap.page

TekCare corporation is an authorized service center for Epson Taiwan Technology & Trading Ltd.

Help for Users in Australia

Epson Australia wishes to provide you with a high level of customer service. In addition to your product manuals, we provide the following sources for obtaining information:

Internet URL

http://www.epson.com.au

Access the Epson Australia World Wide Web pages. Worth taking your modem here for the occasional surf! The site provides a download area for drivers, Epson contact points, new product information and technical support (e-mail).

Epson Helpdesk

Phone: 1300-361-054

Epson Helpdesk is provided as a final backup to make sure our clients have access to advice. Operators on the Helpdesk can aid you in installing, configuring and operating your Epson product. Our Pre-sales Helpdesk staff

can provide literature on new Epson products and advise where the nearest dealer or service agent is located. Many types of queries are answered here.

We encourage you to have all the relevant information on hand when you ring. The more information you prepare, the faster we can help solve the problem. This information includes your Epson product manuals, type of computer, operating system, application programs, and any information you feel is required.

Transportation of Product

Epson recommends retaining product packaging for future transportation. Securing the ink tank with tape and keeping the product upright is also recommended.

Help for Users in New Zealand

Epson New Zealand wishes to provide you with a high level of customer service. In addition to your product documentation, we provide the following sources for obtaining information:

Internet URL

http://www.epson.co.nz

Access the Epson New Zealand World Wide Web pages. Worth taking your modem here for the occasional surf! The site provides a download area for drivers, Epson contact points, new product information and technical support (e-mail).

Epson Helpdesk

Phone: 0800 237 766

Epson Helpdesk is provided as a final backup to make sure our clients have access to advice. Operators on the Helpdesk can aid you in installing, configuring and operating your Epson product. Our Pre-sales Helpdesk staff can provide literature on new Epson products and advise where the nearest dealer or service agent is located. Many types of queries are answered here.

We encourage you to have all the relevant information on hand when you ring. The more information you prepare, the faster we can help solve the problem. This information includes your Epson product documentation, type of computer, operating system, application programs, and any information you feel is required.

Transportation of Product

Epson recommends retaining product packaging for future transportation. Securing the ink tank with tape and keeping the product upright is also recommended.

Help for Users in Singapore

Sources of information, support, and services available from Epson Singapore are:

World Wide Web

http://www.epson.com.sg

Information on product specifications, drivers for download, Frequently Asked Questions (FAQ), Sales Enquiries, and Technical Support via e-mail are available.

Epson HelpDesk

Toll Free: 800-120-5564

Our HelpDesk team can help you with the following over the phone:

❏ Sales enquiries and product information

❏ Product usage questions or problem troubleshooting

❏ Enquiries on repair service and warranty

Help for Users in Thailand

Contacts for information, support, and services are:

World Wide Web

http://www.epson.co.th

Information on product specifications, drivers for download, Frequently Asked Questions (FAQ), and e-mail are available.

Epson Call Centre

Phone: 66-2460-9699

Email: support@eth.epson.co.th

Our Call Centre team can help you with the following over the phone:

❏ Sales enquiries and product information

❏ Product usage questions or problems

❏ Enquiries on repair service and warranty

Help for Users in Vietnam

Contacts for information, support, and services are:

Epson Service Center

65 Truong Dinh Street, District 1, Ho Chi Minh City, Vietnam.

Phone(Ho Chi Minh City): 84-8-3823-9239, 84-8-3825-6234

29 Tue Tinh, Quan Hai Ba Trung, Hanoi City, Vietnam

Phone(Hanoi City): 84-4-3978-4785, 84-4-3978-4775

Help for Users in Indonesia

Contacts for information, support, and services are:

World Wide Web

http://www.epson.co.id

❏ Information on product specifications, drivers for download

Appendix

❏ Frequently Asked Questions (FAQ), Sales Enquiries, questions through e-mail

Epson Hotline

Phone: +62-1500-766

Fax: +62-21-808-66-799

Our Hotline team can help you with the following over the phone or fax:

❏ Sales enquiries and product information

❏ Technical support

Epson Service Center

Province	Company Name	Address	Phone E-mail
DKI JAKARTA	ESS JAKARTA MANGGADUA	Ruko Mall Mangga Dua No. 48 Jl. Arteri Mangga Dua, Jakarta Utara - DKI JAKARTA	(+6221) 62301104 jkt-admin@epson-indonesia.co.id
NORTH SUMATERA	ESC MEDAN	Jl. Bambu 2 Komplek Graha Niaga Nomor A-4, Medan - North Sumatera	(+6261) 42066090 / 42066091 mdn-adm@epson-indonesia.co.id
WEST JAWA	ESC BANDUNG	Jl. Cihampelas No. 48 A Bandung Jawa Barat 40116	(+6222) 4207033 bdg-admin@epson-indonesia.co.id
DI YOGYAKARTA	ESC YOGYAKARTA	YAP Square, Block A No. 6 Jl. C Simanjutak Yogyakarta - DIY	(+62274) 581065 ygy-admin@epson-indonesia.co.id
EAST JAWA	ESC SURABAYA	Hitech Mall Lt. 2 Block A No. 24 Jl. Kusuma Bangsa No. 116 - 118 Surabaya - JATIM	(+6231) 5355035 sby-admin@epson-indonesia.co.id
SOUTH SULAWESI	ESC MAKASSAR	Jl. Cendrawasih NO. 3A, kunjung mae, mariso, MAKASSAR - SULSEL 90125	(+62411) 8911071 mksr-admin@epson-indonesia.co.id
WEST KALIMANTAN	ESC PONTIANAK	Komp. A yani Sentra Bisnis G33, Jl. Ahmad Yani - Pontianak Kalimantan Barat	(+62561) 735507 / 767049 pontianak-admin@epson-indonesia.co.id
RIAU	ESC PEKANBARU	Jl. Tuanku Tambusai No.459A Pekanbaru Riau	(+62761) 8524695 pkb-admin@epson-indonesia.co.id
DKI JAKARTA	ESS JAKARTA SUDIRMAN	Wisma Keiai Lt. 1 Jl. Jenderal Sudirman Kav. 3 Jakarta Pusat - DKI JAKARTA 10220	(+6221) 5724335 ess@epson-indonesia.co.id
EAST JAWA	ESS SURABAYA	Ruko Surya Inti Jl. Jawa No 2-4 Kav. 29 Surabaya - Jawa Timur	(+6231) 5014949 esssby@epson-indonesia.co.id
BANTEN	ESS SERPONG	Ruko Mall WTC Matahari No. 953, Serpong-Banten	(+6221) 53167051 / 53167052 esstag@epson-indonesia.co.id

Province	Company Name	Address	Phone E-mail
CENTRAL JAWA	ESS SEMARANG	Komplek Ruko Metro Plaza Block C20 Jl. MT Haryono No 970 Semarang - JAWA TENGAH	(+6224) 8313807 / 8417935 esssmg@epson-indonesia.co.id
EAST KALIMANTAN	ESC SAMARINDA	Jl. KH. Wahid Hasyim (M. Yamin) Kelurahan Sempaja Selatan Kecamatan Samarinda UTARA - SAMARINDA - KALTIM	(+62541) 7272904 escsmd@epson-indonesia.co.id
SOUTH SUMATERA	ESC PALEMBANG	Jl. H.M Rasyid Nawawi No. 249 Kelurahan 9 Ilir Palembang Sumatera Selatan	(+62711) 311330 escplg@epson-indonesia.co.id
EAST JAVA	ESC JEMBER	JL. Panglima Besar Sudirman Ruko no.1D Jember-Jawa Timur (Depan Balai Penelitian & Pengolahan Kakao)	(+62331) 488373 / 486468 jmr-admin@epson-indonesia.co.id
NORTH SULAWESI	ESC MANADO	Tekno Megamall Lt LG 11 TK 21, Kawasan Megamas Boulevard, Jl Piere Tendean, Manado - SULUT 95111	(+62431) 8890996 MND-ADMIN@EPSON-INDONESIA.CO.ID

For other cities not listed here, call the Hot Line: 08071137766.

Help for Users in Hong Kong

To obtain technical support as well as other after-sales services, users are welcome to contact Epson Hong Kong Limited.

Internet Home Page

http://www.epson.com.hk

Epson Hong Kong has established a local home page in both Chinese and English on the Internet to provide users with the following information:

❏ Product information

❏ Answers to Frequently Asked Questions (FAQs)

❏ Latest versions of Epson product drivers

Technical Support Hotline

You can also contact our technical staff at the following telephone and fax numbers:

Phone: 852-2827-8911

Fax: 852-2827-4383

Help for Users in Malaysia

Contacts for information, support, and services are:

World Wide Web

http://www.epson.com.my

❏ Information on product specifications, drivers for download

❏ Frequently Asked Questions (FAQ), Sales Enquiries, questions through e-mail

Epson Call Centre

Phone: +60 1800-8-17349

❏ Sales enquiries and product information

❏ Product usage questions or problems

❏ Enquiries on repair services and warranty

Head Office

Phone: 603-56288288

Fax: 603-5628 8388/603-5621 2088

Help for Users in India

Contacts for information, support, and services are:

World Wide Web

http://www.epson.co.in

Information on product specifications, drivers for download, and products enquiry are available.

Helpline

❏ Service, product information, and ordering consumables (BSNL Lines)
Toll-free number: 18004250011
Accessible 9am to 6pm, Monday through Saturday (Except public holidays)

❏ Service (CDMA & Mobile Users)
Toll-free number: 186030001600
Accessible 9am to 6pm, Monday through Saturday (Except public holidays)

Help for Users in the Philippines

To obtain technical support as well as other after sales services, users are welcome to contact the Epson Philippines Corporation at the telephone, fax numbers and e-mail address below:

World Wide Web

http://www.epson.com.ph

Information on product specifications, drivers for download, Frequently Asked Questions (FAQ), and E-mail Enquiries are available.

Epson Philippines Customer Care

Toll Free: (PLDT) 1-800-1069-37766

Toll Free: (Digital) 1-800-3-0037766

Appendix

Metro Manila: (+632)441-9030

Web Site: https://www.epson.com.ph/contact

E-mail: customercare@epc.epson.som.ph

Accessible 9am to 6pm, Monday through Saturday (Except public holidays)

Our Customer Care team can help you with the following over the phone:

- ❏ Sales enquiries and product information
- ❏ Product usage questions or problems
- ❏ Enquiries on repair service and warranty

Epson Philippines Corporation

Trunk Line: +632-706-2609

Fax: +632-706-2663