EPSON

WF-2870 Series

User's Guide

NPD6800-02 EN

Contents

About This Manual

Introduction to the Manuals. 7
Using the Manual to Search for Information. 7
Marks and Symbols. 8
Descriptions Used in this Manual. 9
Operating System References. 9

Important Instructions

Safety Instructions. 10
Safety Instructions for Ink. 10
Printer Advisories and Warnings. 11
Advisories and Warnings for Setting Up the Printer. 11
Advisories and Warnings for Using the Printer. . 11
Advisories and Warnings for Transporting or Storing the Printer. 12
Advisories and Warnings for Using the Printer with a Wireless Connection. 12
Advisories and Warnings for Using the LCD Screen. 12
Notes on the Administrator Password. 12
Protecting Your Personal Information. 14

Printer Basics

Part Names and Functions. 15
Guide to the Control Panel. 17
Control Panel. 17
Guide to the Home Screen. 18
Icons displayed in the LCD Screen. 19
Basic Operations. 20
Entering Characters. 21
Viewing Animations. 22

Network Settings

Network Connection Types. 23
Wi-Fi Connection. 23
Wi-Fi Direct (Simple AP) Connection. 23
Connecting to a Computer. 24
Connecting to a Smart Device. 25
Connecting to a smart device over a wireless router. 25
Connecting to an iPhone, iPad, or iPod touch using Wi-Fi Direct. 25
Connecting to Android Devices using Wi-Fi Direct. 29
Connecting to Devices other than iOS and Android using Wi-Fi Direct. 31
Making Wi-Fi Settings from the Printer. 35
Making Wi-Fi Settings by Entering the SSID and Password. 35
Making Wi-Fi Settings by Push Button Setup (WPS). 37
Making Wi-Fi Settings by PIN Code Setup (WPS). 38
Making Advanced Network Settings. 40
Checking the Network Connection Status. 41
Network Icon. 41
Checking Detailed Network Information from the Control Panel. 41
Printing a Network Connection Report. 42
Printing a Network Status Sheet. 48
Replacing or Adding New Wireless Routers. 48
Changing the Connection Method to a Computer. . 49
Changing the Wi-Fi Direct (Simple AP) Settings. . . 50
Disabling Wi-Fi from the Control Panel. 50
Disconnecting Wi-Fi Direct (Simple AP) Connection from the Control Panel. 51
Restoring the Network Settings from the Control Panel. 52

Preparing the Printer

Loading Papers. 54
Available Paper and Capacities. 54
Loading Paper in the Rear Paper Feed. 57
Loading Envelopes and Precautions. 59
Loading Long Papers. 60
List of Paper Type. 60
Placing Originals. 60
Available Originals for the ADF. 60
Placing Originals on the ADF. 61
Placing Originals on the Scanner Glass. 63
Managing Contacts. 64
Registering or Editing Contacts. 64
Registering or Editing Grouped Contacts. 65
Register Contacts on a Computer. 66
Menu Options for Settings. 67
Menu Options for General Settings. 67
Menu Options for Supply Status. 72
Menu Options for Maintenance. 72

Menu Options for Print Status Sheet. 73
Menu Options for Print Counter. 73
Menu Options for User Settings. 73
Menu Options for Customer Research. 73
Menu Options for Restore Default Settings. 74
Menu Options for Firmware Update. 74
Saving Power. 74
Saving Power - Control Panel. 74

Fax Settings

Before Using Fax Features. 76
Connecting the Printer to a Phone Line. 76
Compatible Telephone Lines. 76
Connecting the Printer to a Phone Line. 77
Connecting Your Phone Device to the Printer. . . 78
Making the Printer Ready to Send and Receive Faxes (Using Fax Setting Wizard). 79
Making Settings Individually for Printer's Fax Features. 81
Setting Receive Mode. 81
Making Settings When You Connect an External Phone Device. 83
Making Settings for Blocking Junk Faxes. 84
Making Settings to Send and Receive Faxes on a Computer. 84
Menu Options for Fax Settings. 85
Check Fax Connection. 85
Fax Setting Wizard. 86
Basic Settings Menu. 86
Receive Settings Menu. 87
Report Settings Menu. 88
Security Settings Menu. 89

Printing

Printing from the Printer Driver on Windows. 90
Accessing the Printer Driver. 90
Printing Basics. 90
Printing on 2-Sides. 92
Printing Several Pages on One Sheet. 93
Printing and Stacking in Page Order (Reverse Order Printing). 94
Printing a Reduced or Enlarged Document. 94
Printing One Image on Multiple Sheets for Enlargement (Creating a Poster). 95
Printing with a Header and Footer. 101
Printing an Anti-Copy Pattern. 102
Printing Multiple Files Together. 103
Printing Using the Color Universal Print Feature. 103
Adjusting the Print Color. 104
Printing to Emphasize Thin Lines. 105
Printing Clear Bar Codes. 105
Canceling Printing. 106
Menu Options for the Printer Driver. 106
Printing from the Printer Driver on Mac OS. 108
Printing Basics. 108
Printing on 2-Sides. 110
Printing Several Pages on One Sheet. 111
Printing and Stacking in Page Order (Reverse Order Printing). 111
Printing a Reduced or Enlarged Document. . . . 112
Adjusting the Print Color. 113
Canceling Printing. 113
Menu Options for the Printer Driver. 113
Making Operation Settings for the Mac OS Printer Driver. 115
Printing from Smart Devices. 116
Using Epson iPrint. 116
Using Epson Print Enabler. 117
Using AirPrint. 118
Canceling the Ongoing Job. 119

Copying

Copying Basics. 120
Copying on 2-Sides. 121
Copying Multiple Originals onto One Sheet. 121
Basic Menu Options for Copying. 121
Advanced Menu Options for Copying. 122

Scanning

Scanning Using the Control Panel. 124
Scanning to a Computer (Event Manager). 124
Scanning to the Cloud. 128
Scanning Using WSD. 130
Scanning from a Computer. 132
Scanning Using Epson Scan 2. 132
Scanning from Smart Devices. 139
Installing Epson iPrint. 139
Scanning Using Epson iPrint. 139

Faxing

Before Using Fax Features. 141
Sending Faxes Using the Printer. 141
Sending Faxes Using the Control Panel. 141
Various Ways of Sending Faxes. 143
Receiving Faxes on the Printer. 145

Receiving Incoming Faxes. 146
Receiving Faxes by Making a Phone Call. 147
Using Other Faxing Features. 148
Printing Fax Report Manually. 148
Menu Options for Faxing. 148
Recipient. 148
Fax Settings. 149
More. 150
Menu Options for User Settings. 150
Sending a Fax from a Computer. 150
Sending Documents Created Using an Application (Windows). 151
Sending Documents Created Using an Application (Mac OS). 153
Receiving Faxes on a Computer. 155
Saving Incoming Faxes on a Computer. 155
Canceling the Feature that Saves Incoming Faxes to the Computer. 155
Checking for New Faxes (Windows). 156
Checking for New Faxes (Mac OS). 157

Replacing Ink Cartridges and Other Consumables

Checking the Status of the Remaining Ink and the Maintenance Box. 158
Checking the Status of the Remaining Ink and the Maintenance Box - Control Panel. 158
Checking the Status of the Remaining Ink and the Maintenance Box - Windows. 158
Checking the Status of the Remaining Ink and the Maintenance Box - Mac OS X. 158
Ink Cartridge Codes. 159
Ink Cartridge Handling Precautions. 159
Replacing Ink Cartridges. 162
Maintenance Box Code. 162
Maintenance Box Handling Precautions. 162
Replacing a Maintenance Box. 163
Temporarily Printing with Black Ink. 164
Temporarily Printing with Black Ink - Control Panel. 164
Temporarily Printing with Black Ink - Windows 165
Temporarily Printing with Black Ink - Mac OS. .166
Conserving Black Ink when the Black Ink Is Low (for Windows Only). 167

Maintaining the Printer

Preventing the Print Head from Drying. 168
Checking and Cleaning the Print Head. 168
Checking and Cleaning the Print Head - Control Panel. 168
Checking and Cleaning the Print Head - Windows. 169
Checking and Cleaning the Print Head - Mac OS. 169
Aligning the Print Head. 170
Aligning the Print Head - Control Panel. 170
Cleaning the Paper Path for Ink Smears. 170
Cleaning the ADF. 171
Cleaning the Scanner Glass. 173
Cleaning the Translucent Film. 174

Network Service and Software Information

Application for Configuring Printer Operations (Web Config). 177
Running Web Config on a Web Browser. 177
Running Web Config on Windows. 178
Running Web Config on Mac OS. 178
Application for Scanning Documents and Images (Epson Scan 2). 178
Adding the Network Scanner. 179
Application for Configuring Scanning Operations from the Control Panel (Epson Event Manager). 180
Application for Scanning from a Computer (Epson ScanSmart). 180
Application for Configuring Fax Operations and Sending Faxes (FAX Utility). 181
Application for Sending Faxes (PC-FAX Driver). . 181
Application for Quick and Fun Printing from a Computer (Epson Photo+). 182
Application for Easily Operating the Printer from a Smart device (Epson Smart Panel). 182
Application for Updating Software and Firmware (Epson Software Updater). 183
Application for Setting up the Device on a Network (EpsonNet Config). 183
Installing the Latest Applications. 184
Adding the Printer (for Mac OS Only). 185
Updating Applications and Firmware. 185
Uninstalling Applications. 185
Uninstalling Applications - Windows. 186
Uninstalling Applications - Mac OS. 186
Printing Using a Network Service. 187

Solving Problems

Checking the Printer Status. 188
Checking Messages on the LCD Screen. 188
Checking the Printer Status - Windows. 189
Checking the Printer Status - Mac OS. 189
Checking the Software Status. 190
Removing Jammed Paper. 190
Removing Jammed Paper from the Rear Paper Feed. 190
Removing Jammed Paper from Rear Cover. . . . 191
Removing Jammed Paper from Inside the Printer. 192
Removing Jammed Paper from the ADF. 193
Paper Does Not Feed Correctly. 195
Paper Jams. 195
Paper Feeds at a Slant. 195
Several Sheets of Paper are Fed at a Time. 195
Paper Out Error Occurs. 196
Paper is Ejected During Printing. 196
Original Does Not Feed in the ADF. 196
Power and Control Panel Problems. 196
Power Does Not Turn On. 196
Power Does Not Turn Off. 197
Power Turns Off Automatically. 197
LCD Screen Gets Dark. 197
Cannot Print from a Computer. 197
Checking the Connection (USB). 197
Checking the Connection (Network). 198
Checking the Software and Data. 198
Checking the Printer Status from the Computer (Windows). 200
Checking the Printer Status from the Computer (Mac OS). 201
When You Cannot Make Network Settings. 201
Cannot Connect from Devices Even Though Network Settings are No Problems. 202
Checking the SSID Connected to the Printer. . . 203
Checking the SSID for the Computer. 204
Wireless LAN (Wi-Fi) Connections Become Unstable When Using USB 3.0 Devices on a Mac. 205
Cannot Print from an iPhone, iPad, or iPod touch. 205
Printout Problems. 205
Printout is Scuffed or Color is Missing. 205
Banding or Unexpected Colors Appear. 206
Colored Banding Appears at Intervals of Approximately 2.5 cm. 206
Blurry Prints, Vertical Banding, or Misalignment. 207
Print Quality is Poor. 207
Paper Is Smeared or Scuffed. 208
Paper is Smeared During Automatic 2-Sided Printing. 209
Printed Photos are Sticky. 209
Images or Photos are Printed in Unexpected Colors. 209
Cannot Print Without Margins. 209
Edges of the Image are Cropped During Borderless Printing. 210
The Position, Size, or Margins of the Printout Are Incorrect. 210
Printed Characters Are Incorrect or Garbled. . . 210
The Printed Image Is Inverted. 211
Mosaic-Like Patterns in the Prints. 211
Uneven Colors, Smears, Dots, or Straight Lines Appear in the Copied Image. 211
Moiré (Cross-Hatch) Patterns Appear in the Copied Image. 211
An Image of the Reverse Side of the Original Appears in the Copied Image. 211
Banding Appears when Copying from the ADF 212
The Text or Image Copied from the ADF is Squeezed or Stretched. 212
The Printout Problem Could Not be Cleared. . . 212
Other Printing Problems. 212
Printing Is Too Slow. 212
Printing or Copying Slows Down Dramatically During Continuous Operation. . . 213
Cannot Cancel Printing from a Computer Running Mac OS X v10.6.8. 213
Cannot Start Scanning. 213
Cannot Start Scanning when Using the Control Panel. 214
Scanned Image Problems. 214
Uneven Colors, Dirt, Spots, and so on Appear when Scanning from the Scanner Glass. 214
Straight Lines Appear when Scanning from ADF. 215
The Text or Image Scanned from the ADF is Squeezed or Stretched. 215
The Image Quality Is Rough. 215
Offset Appears in the Background of Images. . . 215
Text is Blurred. 216
Moiré Patterns (Web-Like Shadows) Appear. . . 216
Cannot Scan the Correct Area on the Scanner Glass. 216
Cannot Preview in Thumbnail. 217
Text is Not Recognized Correctly when Saving as a Searchable PDF. 217
Cannot Solve Problems in the Scanned Image. . 218
Other Scanning Problems. 218

Scanning Is Too Slow. 218
Scanning Slows Down Dramatically During Continuous Scanning. 218
Scanning Stops when Scanning to PDF/ Multi-TIFF. 219
Problems when Sending and Receiving Faxes. 219
Cannot Send or Receive Faxes. 219
Cannot Send Faxes. 220
Cannot Send Faxes to a Specific Recipient. 221
Cannot Send Faxes at a Specified Time. 221
Cannot Receive Faxes. 221
Memory Full Error Occurs. 222
Sent Fax Quality Is Poor. 222
Faxes Are Sent at the Wrong Size. 222
Received Fax Quality Is Poor. 223
Received Faxes Are Not Printed. 223
Pages are Blank or only a Small Amount of Text is Printed on the Second Page in Received Faxes. 223
Other Faxing Problems. 224
Cannot Make Calls on the Connected Telephone. 224
Answering Machine Cannot Answer Voice Calls 224
Sender's Fax Number Not Displayed on Received Faxes or the Number Is Wrong. 224
Other Problems. 224
Slight Electric Shock when Touching the Printer 224
Operation Sounds Are Loud. 224
The Date and Time Are Incorrect. 225
Application Is Blocked by a Firewall (for Windows Only). 225

Appendix

Technical Specifications. 226
Printer Specifications. 226
Scanner Specifications. 227
Interface Specifications. 227
Fax Specifications. 228
Network Function List. 228
Wi-Fi Specifications. 229
Security Protocol. 229
Supported Third Party Services. 229
Dimensions. 230
Electrical Specifications. 230
Environmental Specifications. 231
System Requirements. 231
Regulatory Information. 232
Standards and Approvals. 232
German Blue Angel. 232
Restrictions on Copying. 232
Transporting and Storing the Printer. 233
Copyright. 235
Trademarks. 236
Where to Get Help. 236
Technical Support Web Site. 236
Contacting Epson Support. 237

About This Manual

Introduction to the Manuals

The following manuals are supplied with your Epson printer. As well as the manuals, check the various types of help information available from the printer itself or from the Epson software applications.

❏ Start Here (paper manual)

Provides you with information on setting up the printer, installing the software, using the printer, solving problems, and so on.

❏ User's Guide (digital manual)

This manual. Provides overall information and instructions on using the printer, on network settings when using the printer on a network, and on solving problems.

You can obtain the latest versions of the above manuals with the following methods.

❏ Paper manual

Visit the Epson Europe support website at http://www.epson.eu/Support, or the Epson worldwide support website at http://support.epson.net/.

❏ Digital manual

Start EPSON Software Updater on your computer. EPSON Software Updater checks for available updates of Epson software applications and the digital manuals, and allows you to download the latest ones.

Related Information

➡ "Application for Updating Software and Firmware (Epson Software Updater)" on page 183

Using the Manual to Search for Information

The PDF manual allows you to search for information you are looking for by keyword, or jump directly to specific sections using the bookmarks. You can also print only the pages you need. This section explains how to use a PDF manual that has been opened in Adobe Reader X on your computer.

Searching by keyword

Click **Edit** > **Advanced Search**. Enter the keyword (text) for information you want to find in the search window, and then click **Search**. Hits are displayed as a list. Click one of the displayed hits to jump to that page.

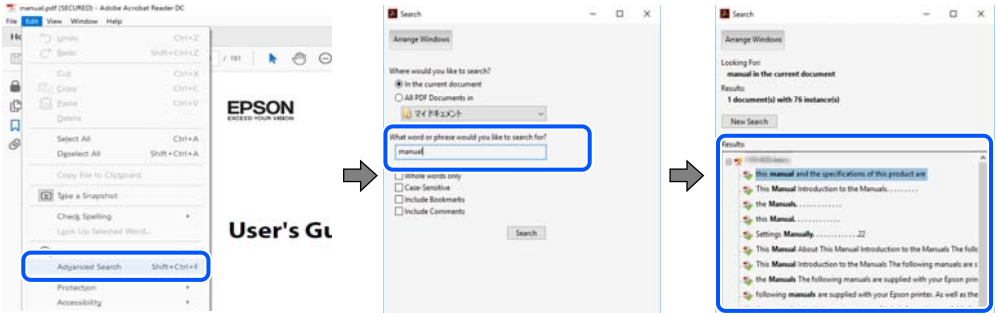

Jumping directly from bookmarks

Click a title to jump to that page. Click + or > to view the lower level titles in that section. To return to the previous page, perform the following operation on your keyboard.

❏ Windows: Hold down **Alt**, and then press ←.

❏ Mac OS: Hold down the command key, and then press ←.

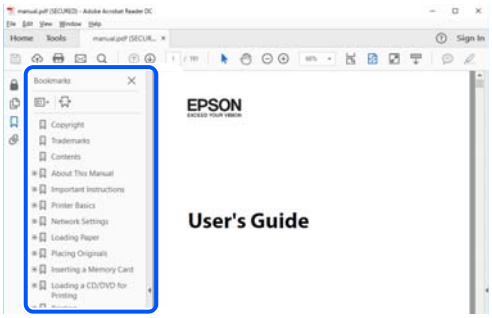

Printing only the pages you need

You can extract and print only the pages you need. Click **Print** in the **File** menu, and then specify the pages you want to print in **Pages** in **Pages to Print**.

❏ To specify a series of pages, enter a hyphen between the start page and the end page.

Example: 20-25

❏ To specify pages that are not in series, divide the pages with commas.

Example: 5, 10, 15

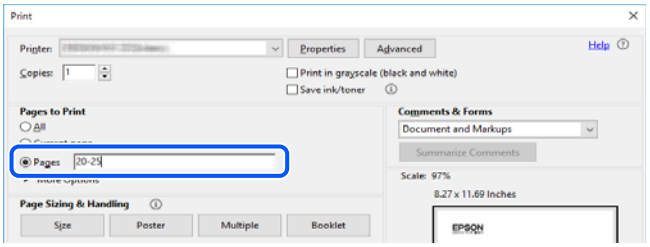

Marks and Symbols

> ***Caution:***
> *Instructions that must be followed carefully to avoid bodily injury.*

> ***Important:***
> *Instructions that must be observed to avoid damage to your equipment.*

Note:
Provides complementary and reference information.

Related Information

➡ Links to related sections.

Descriptions Used in this Manual

❏ Screenshots of the printer driver and the Epson Scan 2 (scanner driver) screens are from Windows 10 or macOS Mojave. The content displayed on the screens varies depending on the model and situation.

❏ Illustrations used in this manual are examples only. Although there may be slight differences depending on the model, the method of operation is the same.

❏ Some of the menu items on the LCD screen vary depending on the model and settings.

❏ You can read the QR code using dedicated app.

Operating System References

Windows

In this manual, terms such as "Windows 10", "Windows 8.1", "Windows 8", "Windows 7", "Windows Vista", "Windows XP", "Windows Server 2019", "Windows Server 2016", "Windows Server 2012 R2", "Windows Server 2012", "Windows Server 2008 R2", "Windows Server 2008", "Windows Server 2003 R2", and "Windows Server 2003" refer to the following operating systems. Additionally, "Windows" is used to refer to all versions.

❏ Microsoft® Windows® 10 operating system

❏ Microsoft® Windows® 8.1 operating system

❏ Microsoft® Windows® 8 operating system

❏ Microsoft® Windows® 7 operating system

❏ Microsoft® Windows Vista® operating system

❏ Microsoft® Windows® XP operating system

❏ Microsoft® Windows® XP Professional x64 Edition operating system

❏ Microsoft® Windows Server® 2019 operating system

❏ Microsoft® Windows Server® 2016 operating system

❏ Microsoft® Windows Server® 2012 R2 operating system

❏ Microsoft® Windows Server® 2012 operating system

❏ Microsoft® Windows Server® 2008 R2 operating system

❏ Microsoft® Windows Server® 2008 operating system

❏ Microsoft® Windows Server® 2003 R2 operating system

❏ Microsoft® Windows Server® 2003 operating system

Mac OS

In this manual, "Mac OS" is used to refer to Mac OS X v10.6.8 or later as well as macOS 11 or later.

Important Instructions

Safety Instructions

Read and follow these instructions to ensure safe use of this printer. Make sure you keep this manual for future reference. Also, be sure to follow all warnings and instructions marked on the printer.

- ❏ Some of the symbols used on your printer are to ensure safety and proper use of the printer. Visit the following Web site to learn the meaning of the symbols.

  http://support.epson.net/symbols

- ❏ Use only the power cord supplied with the printer and do not use the cord with any other equipment. Use of other cords with this printer or the use of the supplied power cord with other equipment may result in fire or electric shock.
- ❏ Be sure your AC power cord meets the relevant local safety standard.
- ❏ Never disassemble, modify, or attempt to repair the power cord, plug, printer unit, scanner unit, or options by yourself, except as specifically explained in the printer's manuals.
- ❏ Unplug the printer and refer servicing to qualified service personnel under the following conditions:

  The power cord or plug is damaged; liquid has entered the printer; the printer has been dropped or the casing damaged; the printer does not operate normally or exhibits a distinct change in performance. Do not adjust controls that are not covered by the operating instructions.
- ❏ Place the printer near a wall outlet where the plug can be easily unplugged.
- ❏ Do not place or store the printer outdoors, near excessive dirt or dust, water, heat sources, or in locations subject to shocks, vibrations, high temperature or humidity.
- ❏ Take care not to spill liquid on the printer and not to handle the printer with wet hands.
- ❏ Keep the printer at least 22 cm away from cardiac pacemakers. Radio waves from this printer may adversely affect the operation of cardiac pacemakers.
- ❏ If the LCD screen is damaged, contact your dealer. If the liquid crystal solution gets on your hands, wash them thoroughly with soap and water. If the liquid crystal solution gets into your eyes, flush them immediately with water. If discomfort or vision problems remain after a thorough flushing, see a doctor immediately.
- ❏ Avoid using a telephone during an electrical storm. There may be a remote risk of electric shock from lightning.
- ❏ Do not use a telephone to report a gas leak in the vicinity of the leak.

Safety Instructions for Ink

- ❏ Be careful when you handle used ink cartridges, as there may be some ink around the ink supply port.
  - ❏ If ink gets on your skin, wash the area thoroughly with soap and water.
  - ❏ If ink gets into your eyes, flush them immediately with water. If discomfort or vision problems continue after a thorough flushing, see a doctor immediately.
  - ❏ If ink gets into your mouth, see a doctor right away.
- ❏ Do not disassemble the ink cartridge and the maintenance box; otherwise ink may get into your eyes or on your skin.

❏ Do not shake ink cartridges too vigorously and do not drop them. Also, be careful not to squeeze them or tear their labels. Doing so may cause ink leakage.

❏ Keep ink cartridges and maintenance box out of the reach of children.

Printer Advisories and Warnings

Read and follow these instructions to avoid damaging the printer or your property. Make sure you keep this manual for future reference.

Advisories and Warnings for Setting Up the Printer

❏ Do not block or cover the vents and openings in the printer.

❏ Use only the type of power source indicated on the printer's label.

❏ Avoid using outlets on the same circuit as photocopiers or air control systems that regularly switch on and off.

❏ Avoid electrical outlets controlled by wall switches or automatic timers.

❏ Keep the entire computer system away from potential sources of electromagnetic interference, such as loudspeakers or the base units of cordless telephones.

❏ The power-supply cords should be placed to avoid abrasions, cuts, fraying, crimping, and kinking. Do not place objects on top of the power-supply cords and do not allow the power-supply cords to be stepped on or run over. Be particularly careful to keep all the power-supply cords straight at the ends and the points where they enter and leave the transformer.

❏ If you use an extension cord with the printer, make sure that the total ampere rating of the devices plugged into the extension cord does not exceed the cord's ampere rating. Also, make sure that the total ampere rating of all devices plugged into the wall outlet does not exceed the wall outlet's ampere rating.

❏ If you plan to use the printer in Germany, the building installation must be protected by a 10 or 16 amp circuit breaker to provide adequate short-circuit protection and over-current protection for the printer.

❏ When connecting the printer to a computer or other device with a cable, ensure the correct orientation of the connectors. Each connector has only one correct orientation. Inserting a connector in the wrong orientation may damage both devices connected by the cable.

❏ Place the printer on a flat, stable surface that extends beyond the base of the printer in all directions. The printer will not operate properly if it is tilted at an angle.

❏ Allow space above the printer so that you can fully raise the document cover.

❏ Leave enough space in front of the printer for the paper to be fully ejected.

❏ Avoid places subject to rapid changes in temperature and humidity. Also, keep the printer away from direct sunlight, strong light, or heat sources.

Advisories and Warnings for Using the Printer

❏ Do not insert objects through the slots in the printer.

❏ Do not put your hand inside the printer during printing.

❏ Do not touch the white flat cable inside the printer.

❏ Do not use aerosol products that contain flammable gases inside or around the printer. Doing so may cause fire.

- ❏ Do not move the print head by hand; otherwise, you may damage the printer.
- ❏ Be careful not to trap your fingers when closing the scanner unit.
- ❏ Do not press too hard on the scanner glass when placing the originals.
- ❏ Always turn the printer off using the ⏻ button. Do not unplug the printer or turn off the power at the outlet until the ⏻ light stops flashing.
- ❏ If you are not going to use the printer for a long period, be sure to unplug the power cord from the electrical outlet.

Advisories and Warnings for Transporting or Storing the Printer

- ❏ When storing or transporting the printer, avoid tilting it, placing it vertically, or turning it upside down; otherwise ink may leak.
- ❏ Before transporting the printer, make sure that the print head is in the home (far right) position.

Advisories and Warnings for Using the Printer with a Wireless Connection

- ❏ Radio waves from this printer may negatively affect the operation of medical electronic equipment, causing them to malfunction. When using this printer inside medical facilities or near medical equipment, follow directions from the authorized personnel representing the medical facilities, and follow all posted warnings and directions on the medical equipment.
- ❏ Radio waves from this printer may negatively affect the operation of automatically controlled devices such as automatic doors or fire alarms, and could lead to accidents due to malfunction. When using this printer near automatically controlled devices, follow all posted warnings and directions on these devices.

Advisories and Warnings for Using the LCD Screen

- ❏ The LCD screen may contain a few small bright or dark spots, and because of its features it may have an uneven brightness. These are normal and do not indicate that it is damaged in any way.
- ❏ Only use a dry, soft cloth for cleaning. Do not use liquid or chemical cleaners.
- ❏ The exterior cover of the LCD screen could break if it receives a heavy impact. Contact your dealer if the screen's surface chips or cracks, and do not touch or attempt to remove the broken pieces.

Notes on the Administrator Password

This printer allows you to set an administrator password to prevent unauthorized access or changes to the device settings and network settings stored in the product when connecting to a network.

Default Value of the Administrator Password

The default value of the administrator password is printed on the label on the product itself, such as the one shown. The position where the label is attached depends on the product, such as the side where the cover is opened, the back, or the bottom.

The following illustration is an example of the label attachment position on the side of the printer where the cover opens.

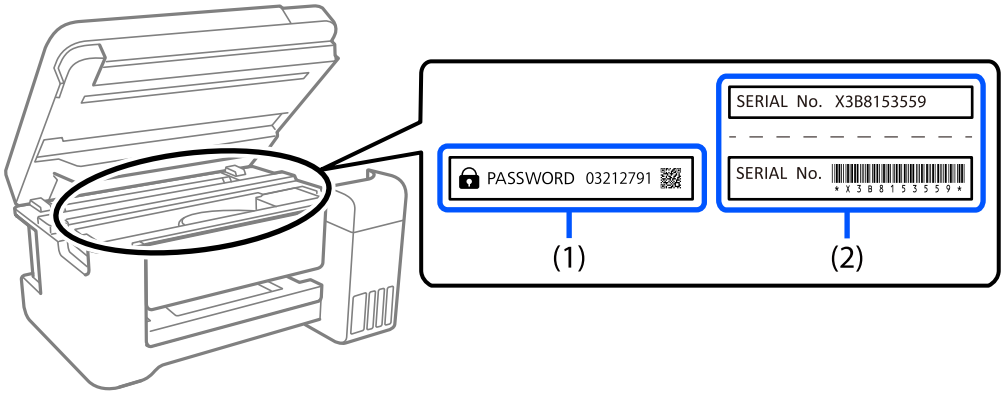

If both labels (1) and (2) are attached, the value next to PASSWORD written on the label in (1) is the default value. In this example, the default value is 03212791.

If only label (2) is attached, the serial number printed on the label in (2) is the default value. In this example, the default value is X3B8153559.

Changing the Administrator Password

For security reasons, we recommend changing the initial password.

It can be changed from Web Config and Epson Device Admin. When changing the password, set it with at least 8 single-byte alphanumerical characters and symbols.

Related Information

➡ "Running Web Config on a Web Browser" on page 177

Operations that Require You to Enter the Administrator Password

If you are prompted to enter the administrator password when performing the following operations, enter the administrator password set on the printer.

❏ When updating the firmware of the printer from a computer or smart device

❏ When logging on to the advanced settings of Web Config

❏ When setting using an application, such as Fax Utility, that can change the printer's settings.

Initializing the Administrator Password

You can return the administrator password to the default settings by initializing the network settings.

Related Information

➡ "Restoring the Network Settings from the Control Panel" on page 52

Protecting Your Personal Information

When you give the printer to someone else or dispose of it, erase all the personal information stored in the printer's memory by selecting **Settings** > **Restore Default Settings** > **Clear All Data and Settings** on the control panel.

Printer Basics

Part Names and Functions

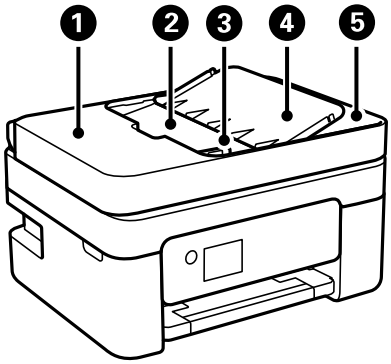

1	ADF (Automatic Document Feeder) cover	Open when removing jammed originals in the ADF.
2	ADF input tray	Feeds originals automatically.
3	ADF edge guide	Feeds originals straight into the printer. Slide to the edge of the originals.
4	ADF document support	Supports originals.
5	ADF output tray	Holds originals ejected from the ADF.

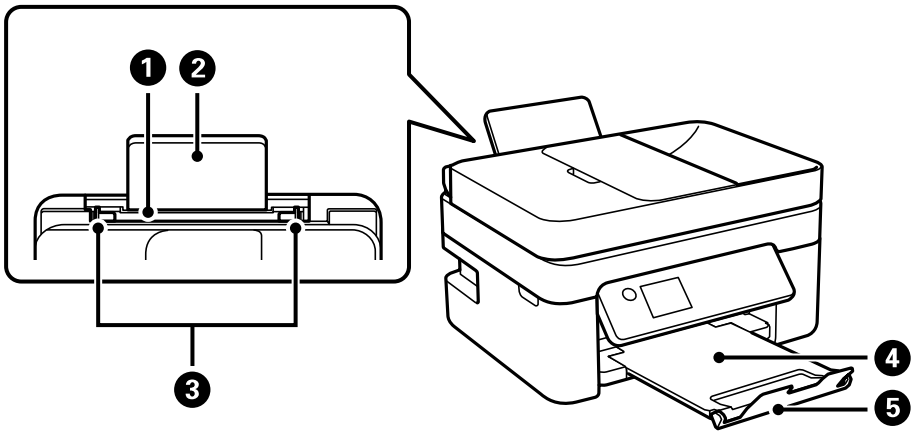

1	Rear paper feed	Loads paper.
2	Paper support	Supports loaded paper.
3	Edge guide	Feeds the paper straight into the printer. Slide to the edges of the paper.
4	Output tray	Holds the ejected paper.
5	Stopper	Prevents printouts from falling from the output tray.

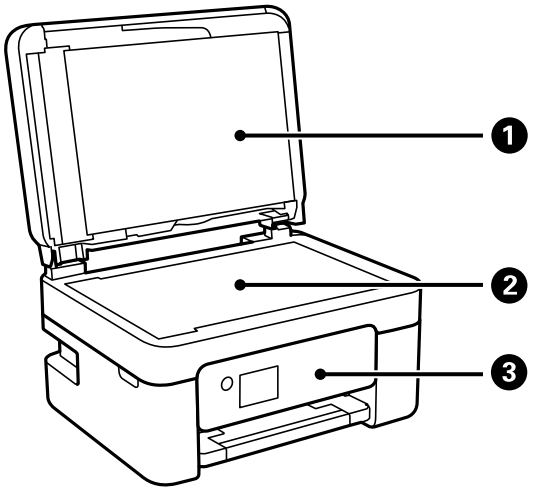

1	Document cover	Blocks external light while scanning.
2	Scanner glass	Place the originals.
3	Control panel	Indicates the printer's status and allows you to make print settings.

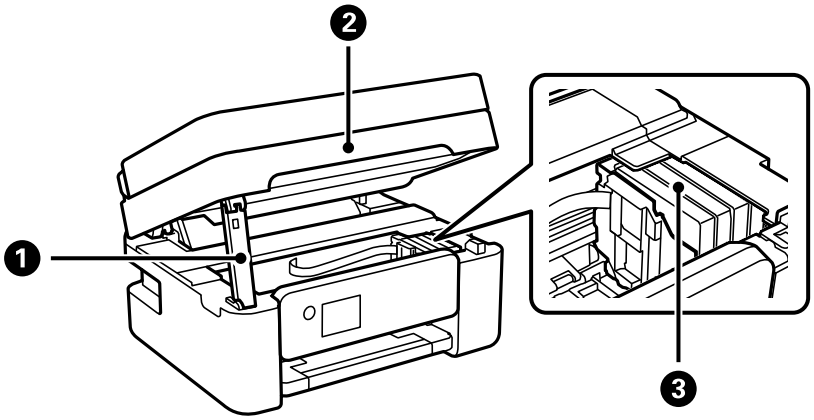

1	Scanner unit support	Supports the scanner unit.
2	Scanner unit	Scans placed originals. Open when replacing ink cartridges or removing jammed paper inside the printer.
3	Ink cartridge holder	Install the ink cartridges. Ink is ejected from the print head nozzles.

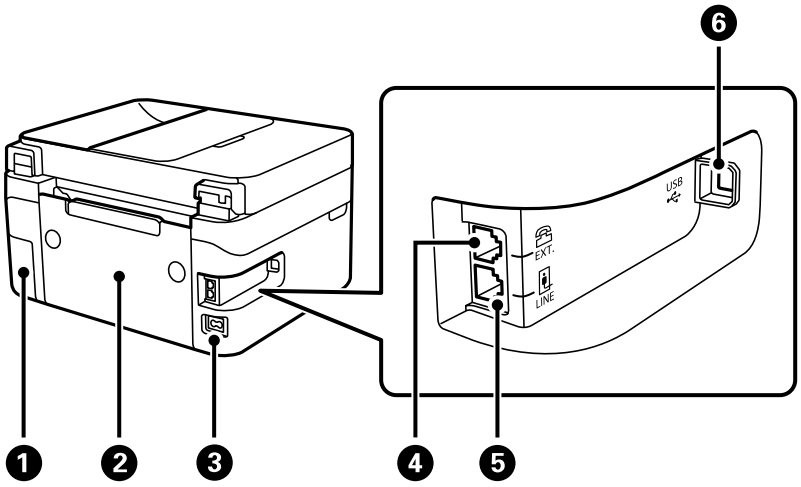

1	Maintenance box cover	Remove when replacing the maintenance box. The maintenance box is a container that collects a very small amount of surplus ink during cleaning or printing.
2	Rear cover	Remove when removing jammed paper.
3	AC inlet	Connects the power cord.
4	EXT. port	Connects external phone devices.
5	LINE port	Connects a phone line.
6	USB port	Connects a USB cable to connect with a computer.

Related Information

➡ "Control Panel" on page 17

Guide to the Control Panel

Control Panel

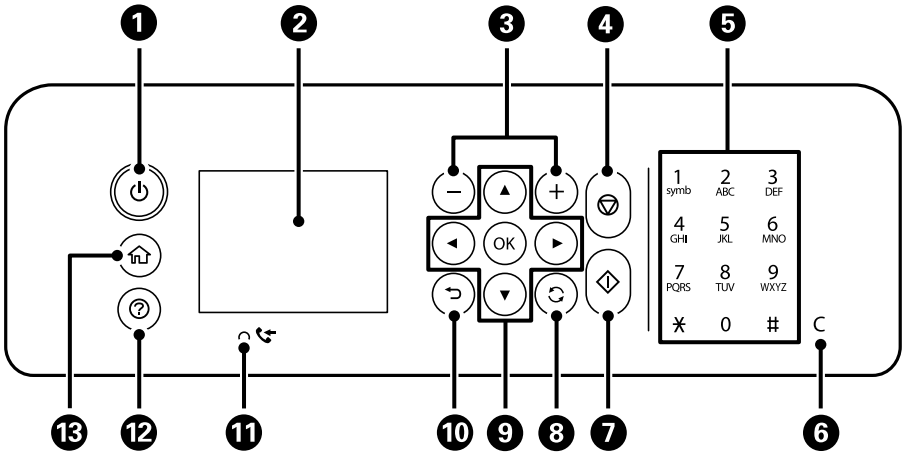

❶	Turns the printer on or off. Unplug the power cord after checking that the power light is off.
❷	Displays menus and messages. Use buttons on the control panel to select a menu or to make settings.
❸	Selects the number of pages to print.
❹	Stops the current operation.
❺	Enters numbers, characters, and symbols.
❻	Clears number settings such as the number of copies.
❼	Starts an operation such as printing or copying.
❽	Applies to a variety of functions depending on the situation.
❾	Use the ▲▼◀▶ buttons to select a menu, and then press the OK button to enter the selected menu.
❿	Returns to the previous screen.
⓫	Turns on when received documents that have not yet been printed or saved are stored in the printer's memory.
⓬	Displays the solutions when you are in trouble.
⓭	Displays the home screen.

Guide to the Home Screen

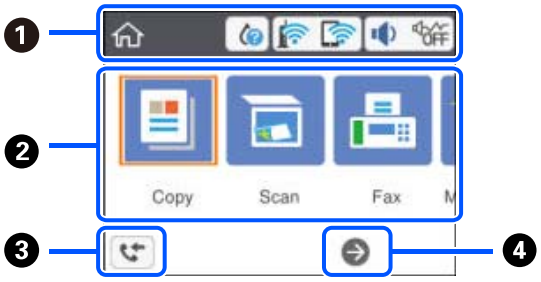

❶	Indicates items that have been setup for the printer as icons. Select the icon by pressing the ▲▼◀▶ buttons, and then press the OK button to check the current settings or access each setting menu.

❷	Displays each menu.	
	Copy	Allows you to copy a document.
	Scan	Allows you to scan a document or a photo.
	Fax	Allows you to send faxes.
	Maintenance	Displays the menus recommended to improve the quality of your printouts such as unclogging nozzles by printing a nozzle check pattern and performing head cleaning, and improving blurring or banding in your printouts by aligning the print head. This is a shortcut to the following menu. **Settings** > **Maintenance**
	Settings	Allows you to make settings related to maintenance, printer setup, and network settings.
❸	Displays the **Fax Data Information** screen.	
❹	You can scroll right by pressing the ▶ button.	

Icons displayed in the LCD Screen

The following icons are displayed on the LCD screen depending on the printer's status.

	Indicates the status of consumables. Select the icon to check the approximate service life of the maintenance box.	
	Indicates the network connection status. Select the icon to check and change the current settings. This is the shortcut for the following menu. **Settings** > **General Settings** > **Network Settings** > **Wi-Fi Setup**	
		The printer is not connected to a wireless (Wi-Fi) network.
		The printer is searching for SSID, unset IP address, or having a problem with a wireless (Wi-Fi) network.
		The printer is connected to a wireless (Wi-Fi) network. The number of bars indicates the signal strength of the connection. The more bars there are, the stronger the connection.
		The printer is not connected to a wireless (Wi-Fi) network in Wi-Fi Direct (Simple AP) mode.
		The printer is connected to a wireless (Wi-Fi) network in Wi-Fi Direct (Simple AP) mode.
	Displays the **Device Sound Settings** screen. You can set **Mute** and **Quiet Mode**. You can also access the **Sound** menu from this screen. This is the shortcut for the following menu. **Settings** > **General Settings** > **Basic Settings** > **Sound**	
		Indicates whether or not **Quiet Mode** is set for the printer. When this feature is enabled, the noise made by printer operations is reduced, but print speed may slow down. However, noises may not be reduced depending on the selected paper type and print quality.
		Indicates that **Mute** is set for the printer.

	Displays the **Fax Data Information** screen. When there are received documents that have not been read or saved yet, the number of the unprocessed jobs is displayed on the icon.
	Indicates that there is additional information. Select the icon to displays the message.
	Indicates a problem with the items. Select the icon to check how to solve the problem.

Basic Operations

Move the focus using the ▲▼◀▶ buttons to select the items, and then press the OK button to confirm your selection or run the selected feature.

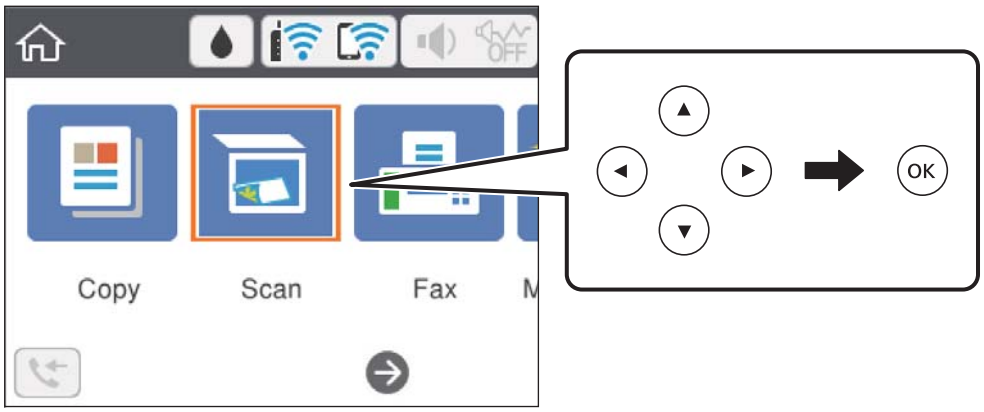

Move the focus to the setting item using the ▲▼◀▶ buttons, and then press the OK button to switch the item on or off.

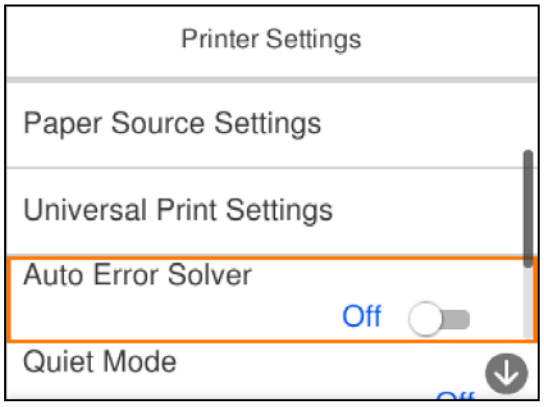

To enter the value, name, address, and so on, move the focus to the input field using the ▲▼◀▶ buttons, and then press the OK button to display the on-screen keyboard.

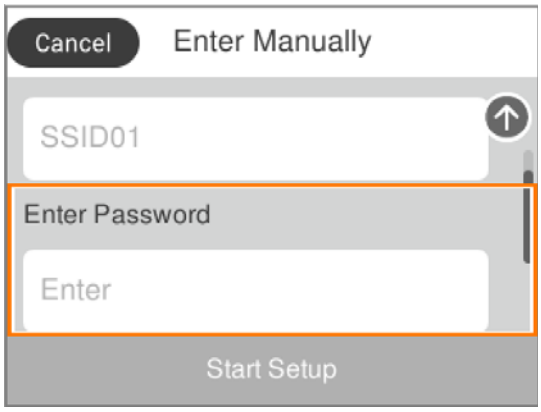

Entering Characters

On-screen Keyboard

You can enter characters and symbols by using on-screen keyboard when you make network settings and so on.

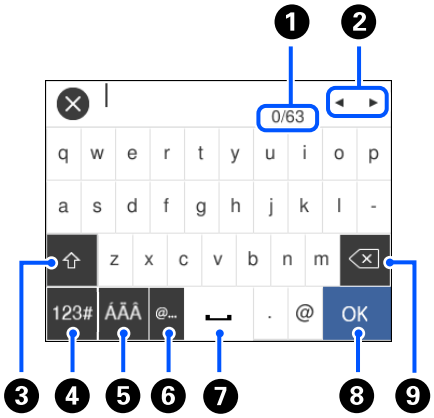

❶	Indicates the character count.
❷	Moves the cursor to the input position.
❸	Switches between upper case and lower case.
❹	Switches the character type. You can enter alphanumerics and symbols.
❺	Switches the character type. You can enter alphanumerics and special characters such as umlauts and accents.
❻	Enters frequently used email domain addresses or URLs by simply selecting the item.
❼	Enters a space.
❽	Enters character.
❾	Deletes a character to the left.

Note:

❏ *Available icons vary depending on the setting item.*

❏ *You can also switch the character type by using the* ↻ *button.*

Viewing Animations

You can view animations of operating instructions such as loading paper or removing jammed paper on the LCD screen.

❏ Press ⓘ button: Displays the help screen. Select **How To** and then select the items that you want to view.

❏ Select **How To** at the bottom of the operation screen: Displays the context-sensitive animation.

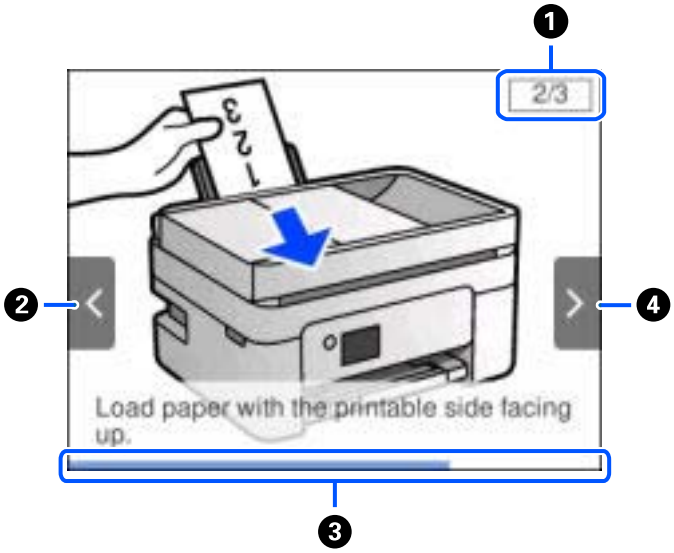

❶	Indicates the total number of steps and the current step number. In the example above, it shows step 2 from 3 steps.
❷	Press ◀ button to return to the previous step.
❸	Indicates your progress through the current step. The animation repeats when the progress bar reaches the end.
❹	Press ▶ button to move to the next step.

Network Settings

Network Connection Types

You can use the following connection methods.

Wi-Fi Connection

Connect the printer and the computer or smart device to the wireless router. This is the typical connection method for home or office networks where computers are connected by Wi-Fi through the wireless router.

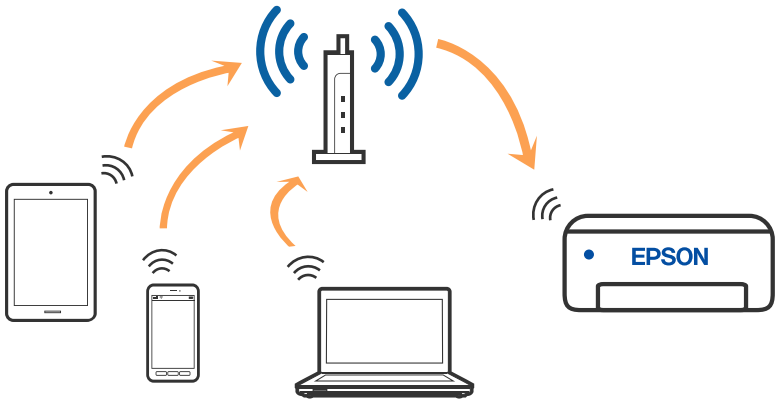

Related Information

➡ “Connecting to a Computer” on page 24
➡ “Connecting to a Smart Device” on page 25
➡ “Making Wi-Fi Settings from the Printer” on page 35

Wi-Fi Direct (Simple AP) Connection

Use this connection method when you are not using Wi-Fi at home or at the office, or when you want to connect the printer and the computer or smart device directly. In this mode, the printer acts as an wireless router and you

can connect the devices to the printer without having to use a standard wireless router. However, devices directly connected to the printer cannot communicate with each other through the printer.

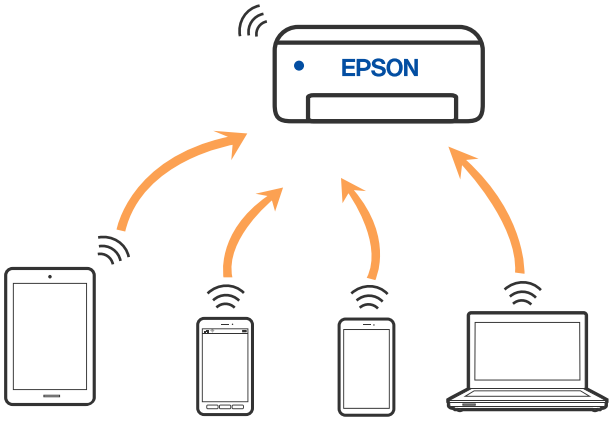

The printer can be connected by Wi-Fi and Wi-Fi Direct (Simple AP) connection simultaneously. However, if you start a network connection in Wi-Fi Direct (Simple AP) connection when the printer is connected by Wi-Fi, the Wi-Fi is temporarily disconnected.

Related Information

➡ "Connecting to an iPhone, iPad, or iPod touch using Wi-Fi Direct" on page 25
➡ "Connecting to Android Devices using Wi-Fi Direct" on page 29
➡ "Connecting to Devices other than iOS and Android using Wi-Fi Direct" on page 31

Connecting to a Computer

We recommend using the installer to connect the printer to a computer. You can run the installer using one of the following methods.

❏ Setting up from the website

Access the following website, and then enter the product name. Go to **Setup**, and then start setting up.

http://epson.sn

❏ Setting up using the software disc (only for the models that come with a software disc and users with Windows computers with disc drives.)

Insert the software disc into the computer, and then follow the on-screen instructions.

Selecting the Connection Methods

Follow the on-screen instructions until the following screen is displayed, and then select the connection method of the printer to the computer.

Select the connection type and then click **Next**.

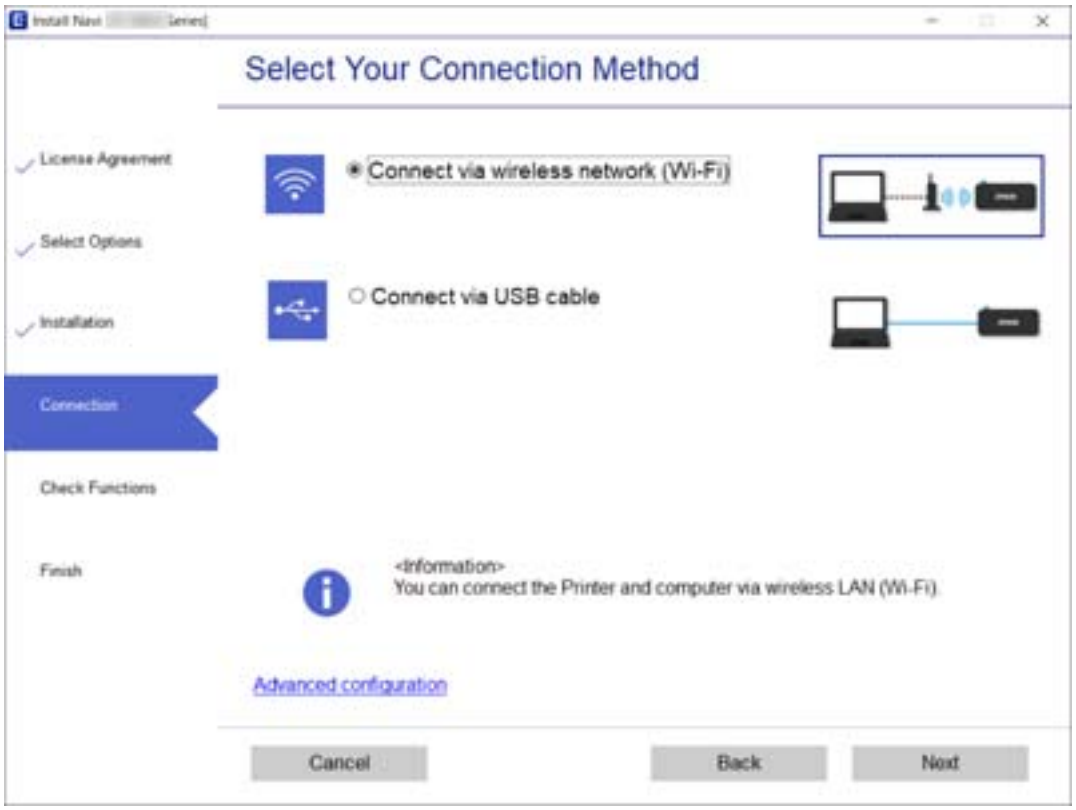

Follow the on-screen instructions.

Connecting to a Smart Device

Connecting to a smart device over a wireless router

You can use the printer from a smart device when you connect the printer to the same Wi-Fi network (SSID) as the smart device. To use the printer from a smart device, set up from the following website. Access to the website from the smart device that you want to connect to the printer.

http://epson.sn > **Setup**

Note:
If you want to connect a computer and a smart device to the printer at the same time, we recommend setting up from the computer first by using the installer.

Related Information

➡ "Printing from Smart Devices" on page 116

Connecting to an iPhone, iPad, or iPod touch using Wi-Fi Direct

This method allows you to connect the printer directly to an iPhone, iPad, or iPod touch without a wireless router. The following conditions are required to connect using this method. If your environment does not match these

conditions, you can connect by selecting **Other OS Devices**. See "Related Information" below for details on connecting.

- ❏ iOS 11 or later
- ❏ Using the standard camera application to scan the QR code
- ❏ Epson iPrint version 7.0 or later

Epson iPrint is used to print from a smart device. Install Epson iPrint on the smart device in advance.

Note:
You only need to make these settings for the printer and the smart device that you want to connect to once. Unless you disable Wi-Fi Direct or restore the network settings to their defaults, you do not need to make these settings again.

1. Select  on the home screen.

   To select an item, use the ▲▼◀▶ buttons, and then press the OK button.

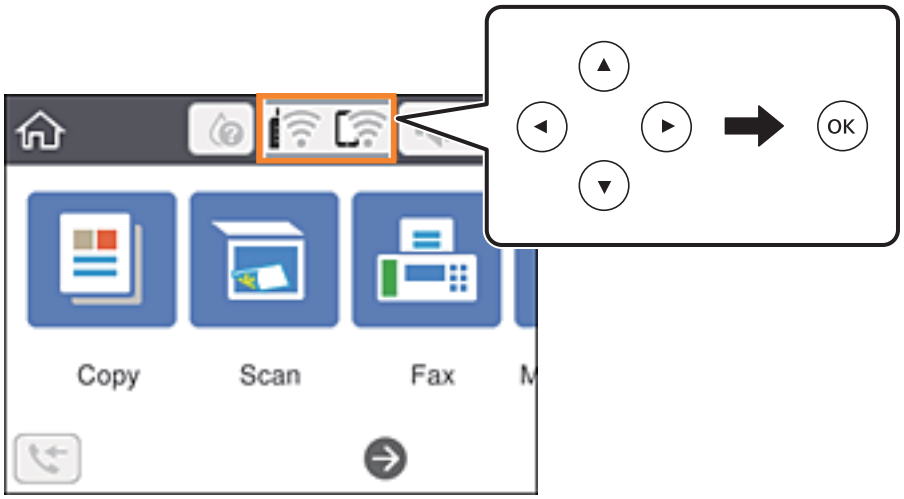

2. Select **Wi-Fi Direct**.
3. Press the OK button.
4. Select **iOS**.

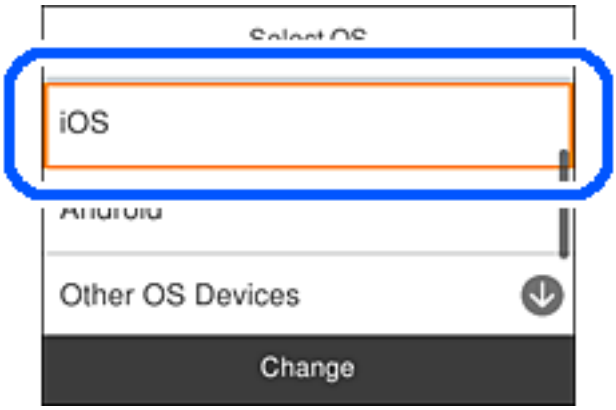

The QR code is displayed on the printer's control panel.

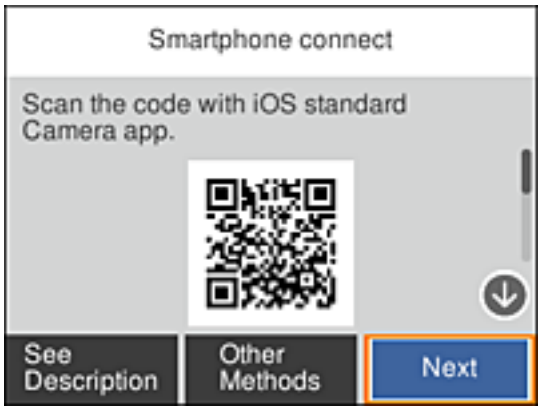

5. On your iPhone, iPad, or iPod touch, start the standard Camera app, and then scan the QR code displayed on the printer's control panel in PHOTO mode.

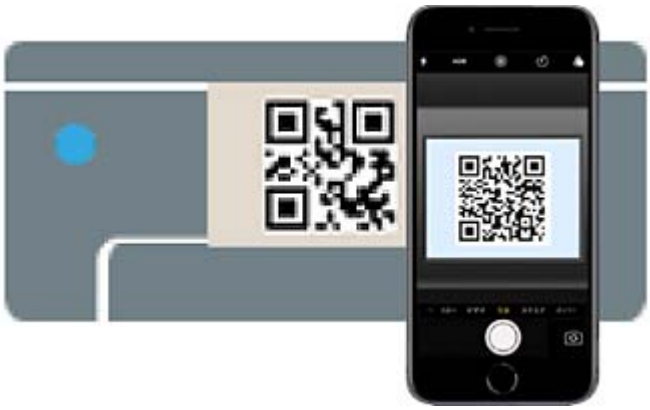

Use the Camera app for iOS 11 or later. You cannot connect to the printer using the Camera app for iOS 10 or earlier. Also, you cannot connect using an app for scanning QR codes. If you cannot connect, select **Other Methods** on the printer's control panel. See "Related Information" below for details on connecting.

6. Tap the notification displayed on the screen of the iPhone, iPad, or iPod touch.

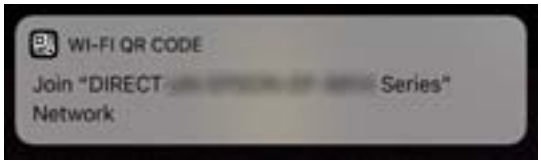

7. Tap **Join**.

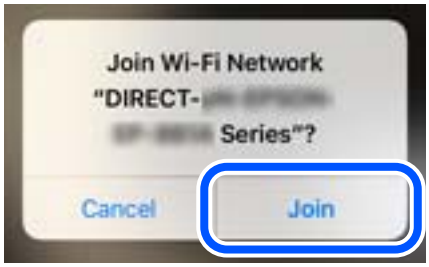

8. On the printer's control panel, select **Next**.
9. On the iPhone, iPad, or iPod touch, start Epson printing app.

   Examples of Epson printing apps



Epson iPrint



Epson Creative Print

10. On the Epson printing app screen, tap **Printer is not selected.**.
11. Select the printer that you want to connect to.



   See the information displayed on the printer's control panel to select the printer.

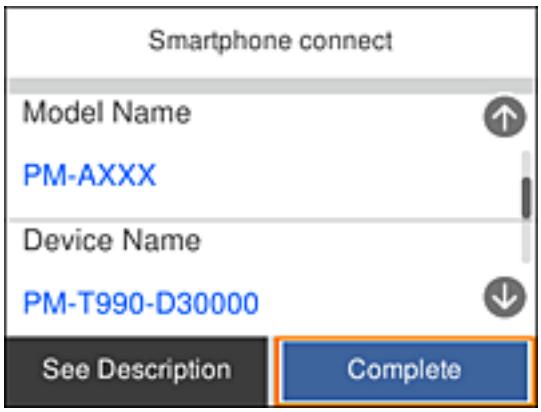

12. On the printer's control panel, select **Complete**.

For smart devices that have been connected to the printer before, select the network name (SSID) on the smart device's Wi-Fi screen to connect them again.

Related Information

➡ "Connecting to Devices other than iOS and Android using Wi-Fi Direct" on page 31

➡ "Printing from Smart Devices" on page 116

Connecting to Android Devices using Wi-Fi Direct

This method allows you to connect the printer directly to your Android device without a wireless router. The following conditions are required to use this function.

❏ Android 4.4 or later

❏ Epson iPrint version 7.0 or later

Epson iPrint is used to print from a smart device. Install Epson iPrint on the smart device in advance.

Note:
You only need to make these settings for the printer and the smart device that you want to connect to once. Unless you disable Wi-Fi Direct or restore the network settings to their defaults, you do not need to make these settings again.

1. Select  on the home screen.

   To select an item, use the ▲▼◀▶ buttons, and then press the OK button.

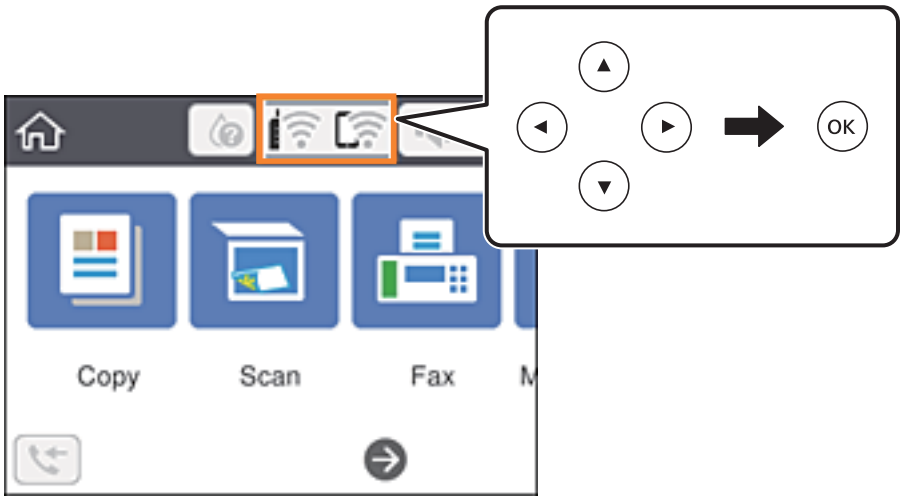

2. Select **Wi-Fi Direct**.

3. Press the OK button.

4. Select **Android**.

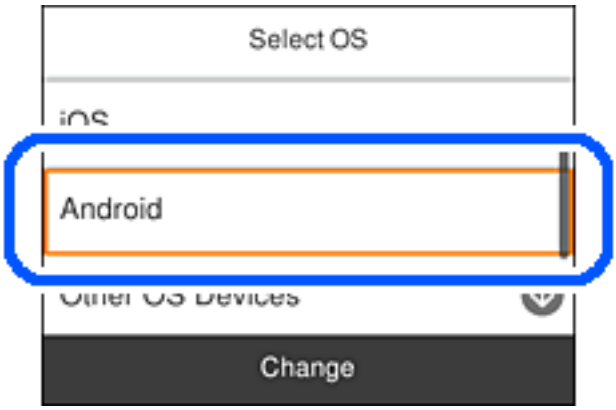

5. On the smart device, start Epson iPrint.



6. On the Epson iPrint screen, tap **Printer is not selected.**.

7. Select the printer that you want to connect to.



See the information displayed on the printer's control panel to select the printer.

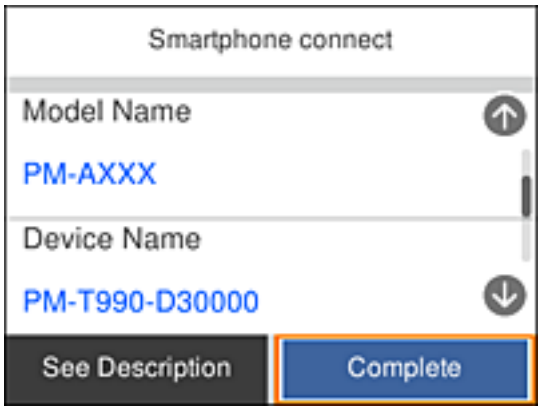

Note:
Printers may not been displayed depending on the Android device. If printers are not displayed, connect by selecting ***Other OS Devices****. See "Related Information" below for connecting.*

8. When the device connection approval screen is displayed, select **Approve**.
9. When the device registration confirmation screen is displayed, select whether you register the approved device to the printer.
10. On the printer's control panel, select **Complete**.

For smart devices that have been connected to the printer before, select the network name (SSID) on the smart device's Wi-Fi screen to connect them again.

Related Information

➡ "Connecting to Devices other than iOS and Android using Wi-Fi Direct" on page 31
➡ "Printing from Smart Devices" on page 116

Connecting to Devices other than iOS and Android using Wi-Fi Direct

This method allows you to connect the printer directly to smart devices without a wireless router.

Note:
You only need to make these settings for the printer and the smart device that you want to connect to once. Unless you disable Wi-Fi Direct or restore the network settings to their defaults, you do not need to make these settings again.

1. Select  on the home screen. on the home screen.

   To select an item, use the ▲▼◀▶ buttons, and then press the OK button.

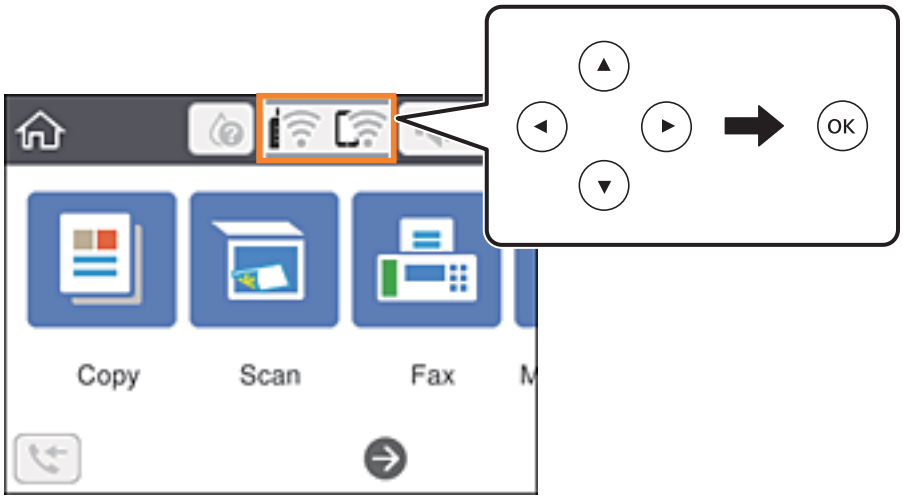

2. Select **Wi-Fi Direct**.
3. Press the OK button.
4. Select **Other OS Devices**.

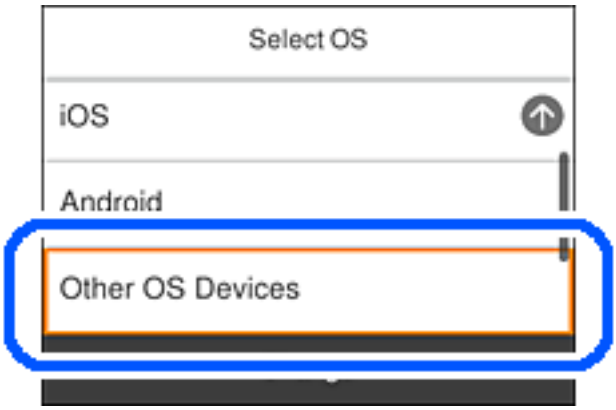

   The SSID and Password for Wi-Fi Direct for the printer are displayed.

5. On the smart device's Wi-Fi screen, select the SSID shown on the printer's control panel, and then enter the password.

   The screenshot is an example on iPhone.



6. On the printer's control panel, select **Next**.

7. On the smart device, start Epson printing app.

   Examples of Epson printing apps



Epson iPrint



Epson Creative Print

8. On the Epson printing app screen, tap **Printer is not selected.**.

9. Select the printer that you want to connect to.



   See the information displayed on the printer's control panel to select the printer.

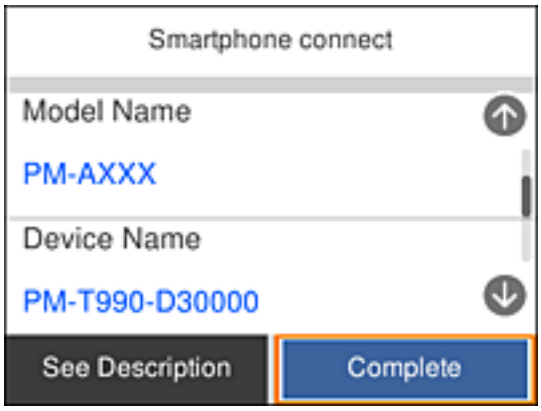

10. On the printer's control panel, select **Complete**.

For smart devices that have been connected to the printer before, select the network name (SSID) on the smart device's Wi-Fi screen to connect them again.

Related Information

➡ "Printing from Smart Devices" on page 116

Making Wi-Fi Settings from the Printer

You can make network settings from the printer's control panel in several ways. Choose the connection method that matches the environment and conditions that you are using.

If you know the information for the wireless router such as SSID and password, you can make settings manually.

If the wireless router supports WPS, you can make settings by using push button setup.

After connecting the printer to the network, connect to the printer from the device that you want to use (computer, smart device, tablet, and so on.)

Make advanced network settings to use a static IP address.

Related Information

➡ "Making Wi-Fi Settings by Entering the SSID and Password" on page 35
➡ "Making Wi-Fi Settings by Push Button Setup (WPS)" on page 37
➡ "Making Wi-Fi Settings by PIN Code Setup (WPS)" on page 38
➡ "Making Advanced Network Settings" on page 40

Making Wi-Fi Settings by Entering the SSID and Password

You can set up a Wi-Fi network by entering the information necessary to connect to a wireless router from the printer's control panel. To set up using this method, you need the SSID and password for a wireless router.

Note:
If you are using a wireless router with its default settings, the SSID and password are on the label. If you do not know the SSID and password, see the documentation provided with the wireless router.

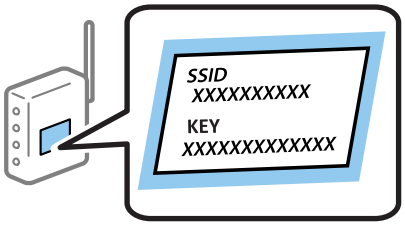

1. Select  on the home screen.

   To select an item, use the ▲▼◀▶ buttons, and then press the OK button.

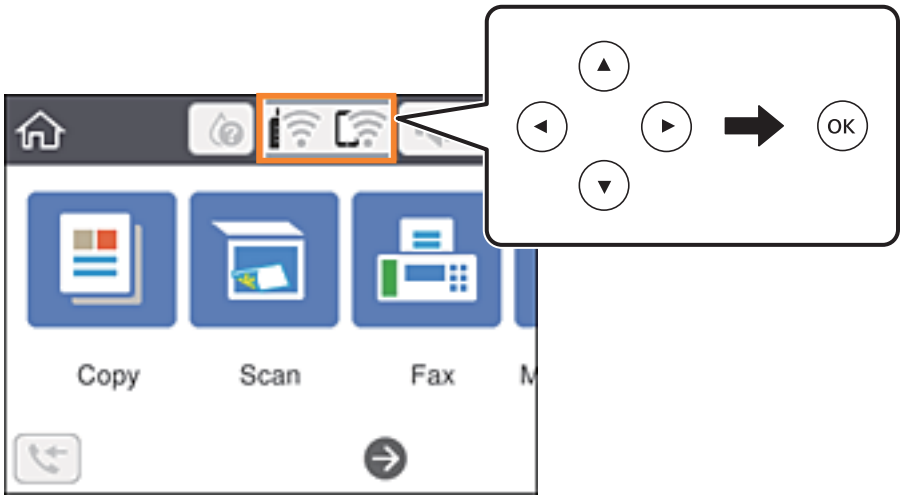

2. Select **Wi-Fi (Recommended)**.

3. Press the OK button to display the next screen.

   If the network connection is already set up, the connection details are displayed. Select **Change Settings** to change the settings.

4. Select **Wi-Fi Setup Wizard**.

5. Select the SSID for the wireless router.

   Note:

   ❏ *If the SSID you want to connect to is not displayed on the printer's control panel, press the ↻ button to update the list. If it is still not displayed, press the + button, and then enter the SSID directly.*

   ❏ *If you do not know the network name (SSID) check if the information is written on the label of the wireless router. If you are using the wireless router with its default settings, use the SSID on the label. If you cannot find any information, see the documentation provided with the wireless router.*

6. Press the OK button, and then enter the password.

   Note:

   ❏ *The password is case-sensitive.*

   ❏ *If you do not know the password, check if the information is written on the label of the wireless router. On the label, the password may be written "Network Key", "Wireless Password", and so on. If you are using the wireless router with its default settings, use the password written on the label.*

7. When you have finished, select **OK**.

8. Check the settings, and then select **Start Setup**.

9. Select **Dismiss** to finish.

   Note:

   *If you fail to connect, load A4 size plain paper, and then select **Print Check Report** to print a connection report.*

10. Press the button.

Related Information

- "Entering Characters" on page 21
- "Checking the Network Connection Status" on page 41
- "When You Cannot Make Network Settings" on page 201

Making Wi-Fi Settings by Push Button Setup (WPS)

You can automatically set up a Wi-Fi network by pressing a button on the wireless routor. If the following conditions are met, you can set up by using this method.

- The wireless router is compatible with WPS (Wi-Fi Protected Setup).
- The current Wi-Fi connection was established by pressing a button on the wireless router.

1. Select on the home screen.

   To select an item, use the ▲▼◀▶ buttons, and then press the OK button.

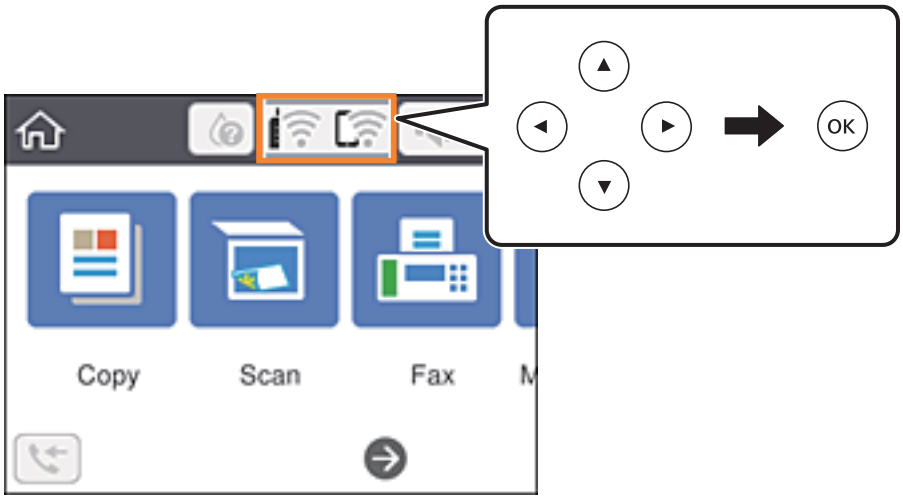

2. Select **Wi-Fi (Recommended)**.
3. Press the OK button.

   If the network connection is already set up, the connection details are displayed. Select **Change Settings** to change the settings.

4. Select **Push Button Setup (WPS)**.

5. Hold down the [WPS] button on the wireless router until the security light flashes.

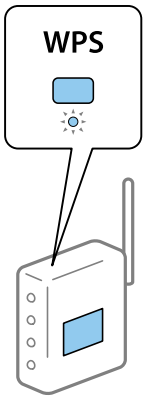

If you do not know where the [WPS] button is, or there are no buttons on the wireless router, see the documentation provided with your wireless router for details.

6. Press the OK button on the printer.

7. Close the screen.

The screen automatically closes after a specific length of time.

Note:
If connection fails, restart the wireless router, move it closer to the printer, and try again. If it still does not work, print a network connection report and check the solution.

8. Press the ⌂ button.

Related Information

➡ "Checking the Network Connection Status" on page 41

➡ "When You Cannot Make Network Settings" on page 201

Making Wi-Fi Settings by PIN Code Setup (WPS)

You can automatically connect to a wireless router by using a PIN code. You can use this method to set up if a wireless router is capable of WPS (Wi-Fi Protected Setup). Use a computer to enter a PIN code into the wireless router.

1. Select  on the home screen.

   To select an item, use the ▲▼◀▶ buttons, and then press the OK button.

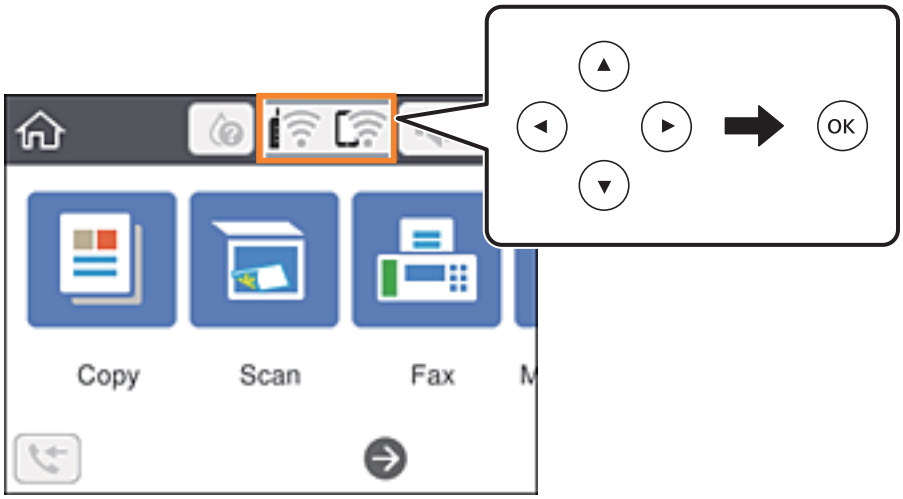

2. Select **Wi-Fi (Recommended)**.

3. Press the OK button.

   If the network connection is already set up, the connection details are displayed. Select **Change Settings** to change the settings.

4. Select **Others** > **PIN Code Setup (WPS)**.

5. Use your computer to enter the PIN code (an eight digit number) displayed on the printer's control panel into the wireless router within two minutes.

   Note:
   See the documentation provided with your wireless router for details on entering a PIN code.

6. Press the OK button on the printer.

7. Close the screen.

   The screen automatically closes after a specific length of time.

   Note:
   If connection fails, restart the wireless router, move it closer to the printer, and try again. If it still does not work, print a connection report and check the solution.

8. Press the ⌂ button.

Related Information

➡ "Checking the Network Connection Status" on page 41

➡ "When You Cannot Make Network Settings" on page 201

Making Advanced Network Settings

You can change the network device name, TCP/IP setup, proxy server and so on. Check your network environment before making changes.

1. Select **Settings** on the home screen.

   To select an item, use the ▲▼◀▶ buttons, and then press the OK button.

2. Select **General Settings** > **Network Settings** > **Advanced**.

3. Select the menu item for settings, and then select or specify the setting values.

Related Information

➡ "Setting Items for Advanced Network Settings" on page 40

Setting Items for Advanced Network Settings

Select the menu item for settings, and then select or specify the setting values.

❏ Device Name

You can enter the following characters.

- ❏ Character limits: 2 to 15 (you must enter at least 2 characters)
- ❏ Usable characters: A to Z, a to z, 0 to 9, -.
- ❏ Characters you cannot use at the top: 0 to 9, -.
- ❏ Characters you cannot use at the bottom: -

❏ TCP/IP

- ❏ Auto

  Select when you are using a wireless router at home or you are allowing the IP address to be acquired automatically by DHCP.

- ❏ Manual

  Select when you do not want the printer's IP address to be changed. Enter the addresses for IP Address, Subnet Mask, and Default Gateway, and make DNS Server settings according to your network environment.

When you select **Auto** for the IP address assignment settings, you can select the DNS server settings from **Manual** or **Auto**. If you cannot obtain the DNS server address automatically, select **Manual**, and then enter the primary DNS server and secondary DNS server address directly.

❏ Proxy Server

- ❏ Do Not Use

  Select when you are using the printer in a home network environment.

- ❏ Use

  Select when you are using a proxy server in your network environment and you want to set it to the printer. Enter the proxy server address and port number.

❏ IPv6 Address

❏ Enable

Select this when using an IPv6 address.

❏ Disable

Select this when using an IPv4 address.

Checking the Network Connection Status

You can check the network connection status in the following way.

Network Icon

You can check the network connection status and strength of the radio wave using the network icon on the printer's home screen.



Related Information

➡ "Icons displayed in the LCD Screen" on page 19

Checking Detailed Network Information from the Control Panel

When your printer is connected to the network, you can also view other network-related information by selecting the network menus you want to check.

1. Select **Settings** on the home screen.

   To select an item, use the ▲ ▼ ◀ ▶ buttons, and then press the OK button.

2. Select **General Settings** > **Network Settings** > **Network Status**.

3. To check the information, select the menus that you want to check.

   ❏ Wi-Fi Status

   Displays the network information (device name, connection, signal strength, obtain IP address, and so on) for Wi-Fi connections.

   ❏ Wi-Fi Direct Status

   Displays whether Wi-Fi Direct is enabled or disabled for Wi-Fi Direct connections.

❏ Print Status Sheet

Prints a network status sheet. The information for Wi-Fi, Wi-Fi Direct, and so on is printed on two or more pages.

Related Information

➡ "Printing a Network Status Sheet" on page 48

Printing a Network Connection Report

You can print a network connection report to check the status between the printer and the wireless router.

1. Load papers.
2. Select **Settings** on the home screen.

   To select an item, use the ▲ ▼ ◀ ▶ buttons, and then press the OK button.
3. Select **General Settings** > **Network Settings** > **Connection Check**.

   The connection check starts.
4. Select **Print Check Report**.
5. Print the network connection report.

   If an error has occurred, check the network connection report, and then follow the printed solutions.
6. Close the screen.

Related Information

➡ "Messages and Solutions on the Network Connection Report" on page 43

Messages and Solutions on the Network Connection Report

Check the messages and error codes on the network connection report, and then follow the solutions.

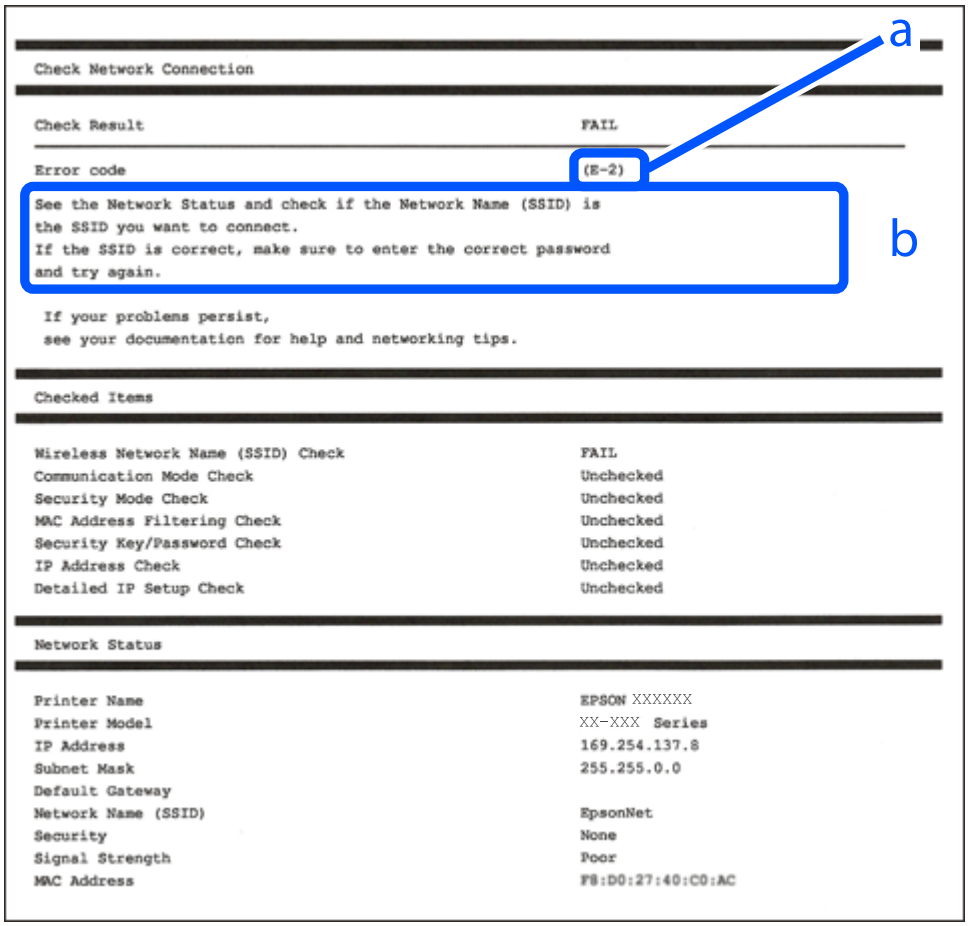

a. Error code

b. Messages on the Network Environment

Related Information

- “E-1” on page 44
- “E-2, E-3, E-7” on page 44
- “E-5” on page 45
- “E-6” on page 45
- “E-8” on page 45
- “E-9” on page 46
- “E-10” on page 46
- “E-11” on page 46
- “E-12” on page 47
- “E-13” on page 47
- “Message on the Network Environment” on page 48

E-1

Solutions:

❏ Make sure your hub or other network device is turned on.

❏ If you want to connect the printer by Wi-Fi, make Wi-Fi settings for the printer again because it is disabled.

E-2, E-3, E-7

Solutions:

❏ Make sure your wireless router is turned on.

❏ Confirm that your computer or device is connected correctly to the wireless router.

❏ Turn off the wireless router. Wait for about 10 seconds, and then turn it on.

❏ Place the printer closer to your wireless router and remove any obstacles between them.

❏ If you have entered the SSID manually, check if it is correct. Check the SSID from the **Network Status** part on the network connection report.

❏ If an wireless router has multiple SSIDs, select the SSID that is displayed. When the SSID is using a non-compliant frequency, the printer does not display them.

❏ If you are using push button setup to establish a network connection, make sure your wireless router supports WPS. You cannot use push button setup if your wireless router does not support WPS.

❏ Makes sure your SSID uses only ASCII characters (alphanumeric characters and symbols). The printer cannot display an SSID that contains non-ASCII characters.

❏ Makes sure you know your SSID and password before connecting to the wireless router. If you are using a wireless router with its default settings, the SSID and password are located on a label on the wireless router. If you do not know your SSID and password, contact the person who set up the wireless router, or see the documentation provided with the wireless router.

❏ If you are connecting to an SSID generated from a tethering smart device, check for the SSID and password in the documentation provided with the smart device.

❏ If your Wi-Fi connection suddenly disconnects, check for the conditions below. If any of these conditions are applicable, reset your network settings by downloading and running the software from the following website.

http://epson.sn > **Setup**

- ❏ Another smart device was added to the network using push button setup.
- ❏ The Wi-Fi network was set up using any method other than push button setup.

Related Information

➡ "Connecting to a Computer" on page 24

➡ "Making Wi-Fi Settings from the Printer" on page 35

E-5

Solutions:

Make sure the wireless router's security type is set to one of the following. If it is not, change the security type on the wireless router, and then reset the printer's network settings.

- ❏ WEP-64 bit (40 bit)
- ❏ WEP-128 bit (104 bit)
- ❏ WPA PSK (TKIP/AES)*
- ❏ WPA2 PSK (TKIP/AES)*
- ❏ WPA (TKIP/AES)
- ❏ WPA2 (TKIP/AES)

* WPA PSK is also known as WPA Personal. WPA2 PSK is also known as WPA2 Personal.

E-6

Solutions:

- ❏ Check if MAC address filtering is disabled. If it is enabled, register the printer's MAC address so that it is not filtered. See the documentation provided with the wireless router for details. You can check the printer's MAC address from the **Network Status** part on the network connection report.
- ❏ If your wireless router is using shared authentication with WEP security, make sure the authentication key and index are correct.
- ❏ If the number of connectable devices on the wireless router is less than the number of network devices that you want to connect, make settings on the wireless router to increase the number of connectable devices. See the documentation provided with the wireless router to make settings.

Related Information

➡ "Setting Items for Advanced Network Settings" on page 40
➡ "Printing a Network Status Sheet" on page 48

E-8

Solutions:

- ❏ Enable DHCP on the wireless router if the printer's Obtain IP Address setting is set to **Auto**.
- ❏ If the printer's Obtain IP Address setting is set to Manual, the IP address you manually set is invalid due to out of range (for example: 0.0.0.0). Set a valid IP address from the printer's control panel or by using Web Config.

Related Information

➡ "Setting Items for Advanced Network Settings" on page 40

E-9

Solutions:

Check the following.

❏ Devices are turned on.

❏ You can access the Internet and other computers or network devices on the same network from the devices you want to connect to the printer.

If still does not connect your printer and network devices after confirming the above, turn off the wireless router. Wait for about 10 seconds, and then turn it on. Then reset your network settings by downloading and running the installer from the following website.

http://epson.sn > **Setup**

Related Information

➡ "Connecting to a Computer" on page 24

E-10

Solutions:

Check the following.

❏ Other devices on the network are turned on.

❏ Network addresses (IP address, subnet mask, and default gateway) are correct if you have set the printer's Obtain IP Address to Manual.

Reset the network address if they are incorrect. You can check the IP address, subnet mask, and default gateway from the **Network Status** part on the network connection report.

If DHCP is enabled, change the printer's Obtain IP Address setting to **Auto**. If you want to set the IP address manually, check the printer's IP address from the **Network Status** part on the network connection report, and then select Manual on the network settings screen. Set the subnet mask to [255.255.255.0].

If still does not connect your printer and network devices, turn off the wireless router. Wait for about 10 seconds, and then turn it on.

Related Information

➡ "Setting Items for Advanced Network Settings" on page 40

E-11

Solutions:

Check the following.

❏ The default gateway address is correct if you set the printer's TCP/IP Setup setting to Manual.

❏ The device that is set as the default gateway is turned on.

Set the correct default gateway address. You can check the default gateway address from the **Network Status** part on the network connection report.

Related Information

➡ "Setting Items for Advanced Network Settings" on page 40

E-12

Solutions:

Check the following.

❏ Other devices on the network are turned on.

❏ The network addresses (IP address, subnet mask, and default gateway) are correct if you are entering them manually.

❏ The network addresses for other devices (subnet mask and default gateway) are the same.

❏ The IP address does not conflict with other devices.

If still does not connect your printer and network devices after confirming the above, try the following.

❏ Turn off the wireless router. Wait for about 10 seconds, and then turn it on.

❏ Make network settings again using the installer. You can run it from the following website.

http://epson.sn > **Setup**

❏ You can register several passwords on a wireless router that uses WEP security type. If several passwords are registered, check if the first registered password is set on the printer.

Related Information

➡ "Setting Items for Advanced Network Settings" on page 40

➡ "Connecting to a Computer" on page 24

E-13

Solutions:

Check the following.

❏ Network devices such as a wireless router, hub, and router are turned on.

❏ The TCP/IP Setup for network devices has not been set up manually. (If the printer's TCP/IP Setup is set automatically while the TCP/IP Setup for other network devices is performed manually, the printer's network may differ from the network for other devices.)

If it still does not work after checking the above, try the following.

❏ Turn off the wireless router. Wait for about 10 seconds, and then turn it on.

❏ Make network settings on the computer that is on the same network as the printer using the installer. You can run it from the following website.

http://epson.sn > **Setup**

❏ You can register several passwords on a wireless router that uses the WEP security type. If several passwords are registered, check if the first registered password is set on the printer.

Related Information

➡ "Setting Items for Advanced Network Settings" on page 40
➡ "Connecting to a Computer" on page 24

Message on the Network Environment

Message	Solution
The Wi-Fi environment needs to be improved. Turn the wireless router off and then turn it on. If the connection does not improve, see the documentation for the wireless router.	After moving the printer closer to the wireless router and removing any obstacles between them, turn off the wireless router. Wait for about 10 seconds, and then turn it on. If it still does not connect, see the documentation supplied with the wireless router.
*No more devices can be connected. Disconnect one of the connected devices if you want to add another one.	Computer and smart devices that can be connected simultaneously are connected in full in the Wi-Fi Direct (Simple AP) connection. To add another computer or smart device, disconnect one of the connected devices or connect it to the other network first. You can confirm the number of wireless devices which can be connected simultaneously and the number of connected devices by checking the network status sheet or the printer's control panel.
The same SSID as Wi-Fi Direct exists in the environment. Change the Wi-Fi Direct SSID if you cannot connect a smart device to the printer.	On the printer's control panel, go to Wi-Fi Direct Setup screen and select the menu to change the setting. You can change the network name following after DIRECT-XX-. Enter within 32 characters.

Printing a Network Status Sheet

You can check the detailed network information by printing it.

1. Load papers.
2. Select **Settings** on the home screen.

   To select an item, use the ▲▼◀▶ buttons, and then press the OK button.
3. Select **General Settings** > **Network Settings** > **Network Status**.
4. Select **Print Status Sheet**.
5. Check the message, and then print the network status sheet.
6. Close the screen.

   The screen automatically closes after a specific length of time.

Replacing or Adding New Wireless Routers

If the SSID changes due to the replacement of a wireless router, or a wireless router is added and a new network environment is established, re-set the Wi-Fi settings.

Related Information

➡ "Changing the Connection Method to a Computer" on page 49

Changing the Connection Method to a Computer

Using the installer and re-set up in a different connection method.

❏ Setting up from the website

Access the following website, and then enter the product name. Go to **Setup**, and then start setting up.

http://epson.sn

❏ Setting up using the software disc (only for the models that come with a software disc and users with Windows computers with disc drives.)

Insert the software disc into the computer, and then follow the on-screen instructions.

Selecting Change the Connection Methods

Follow the on-screen instructions until the following screen is displayed.

Select **Set up Printer connection again (for new network router or changing USB to network, etc.)** on the Install Software screen, and then click **Next**.

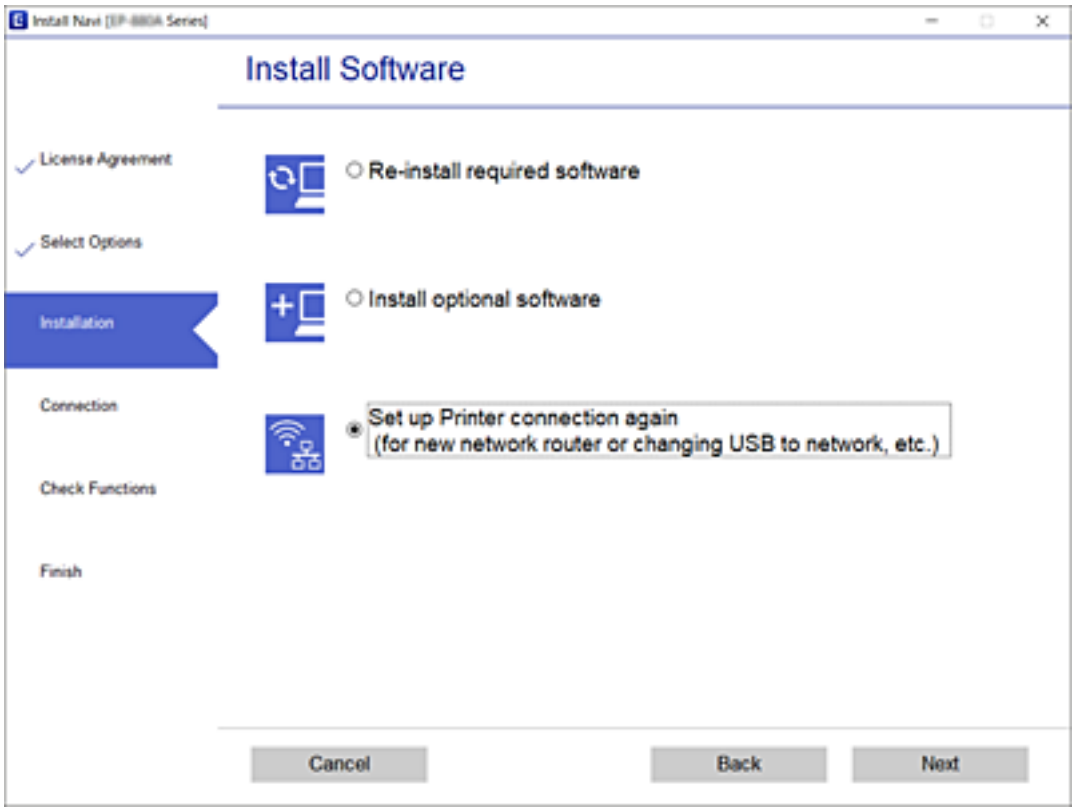

Changing the Wi-Fi Direct (Simple AP) Settings

When Wi-Fi Direct (simple AP) connection is enabled, you can change the settings from  > **Wi-Fi Direct** > **Start Setup** > **Change**, and then the following menu items are displayed.

Change Network Name

Change the Wi-Fi Direct (simple AP) network name (SSID) used for connecting to the printer to your arbitrary name. You can set the network name (SSID) in ASCII characters that is displayed on the software keyboard on the control panel.

When changing the network name (SSID), all connected devices are disconnected. Use the new network name (SSID) if you want to re-connect the device.

Change Password

Change the Wi-Fi Direct (simple AP) password for connecting to the printer to your arbitrary value. You can set the password in ASCII characters that is displayed on the software keyboard on the control panel.

When changing the password, all connected devices are disconnected. Use the new password if you want to re-connect the device.

Disable Wi-Fi Direct

Disable Wi-Fi Direct (simple AP) settings of the printer. When disabling it, all devices connected to the printer in Wi-Fi Direct (Simple AP) connection are disconnected.

Restore Default Settings

Restore all Wi-Fi Direct (simple AP) settings to their defaults.

The Wi-Fi Direct (simple AP) connection information of the smart device saved to the printer is deleted.

Disabling Wi-Fi from the Control Panel

When Wi-Fi is disabled, the Wi-Fi connection is disconnected.

1. Select  on the home screen.

   To select an item, use the ▲▼◀▶ buttons, and then press the OK button.

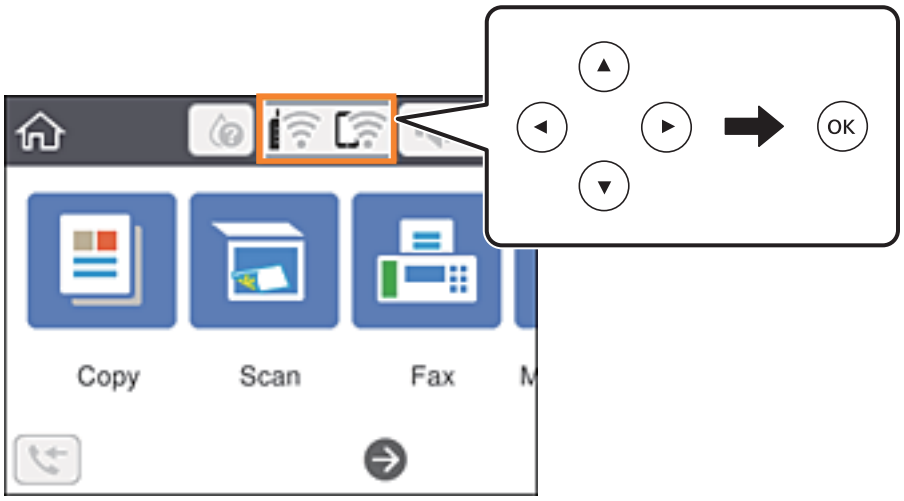

2. Select **Wi-Fi (Recommended)**.

   The network status is displayed.

3. Select **Change Settings**.

4. Select **Others** > **Disable Wi-Fi**.

5. Check the message, and then start setup.

6. When a completion message is displayed, close the screen.

   The screen automatically closes after a specific length of time.

7. Press the  button.

Disconnecting Wi-Fi Direct (Simple AP) Connection from the Control Panel

Note:
When Wi-Fi Direct (Simple AP) connection disabled, all computers and smart devices connected to the printer in Wi-Fi Direct (Simple AP) connection are disconnected. If you want to disconnect a specific device, disconnect from the device instead of the printer.

1. Select  on the home screen.

   To select an item, use the ▲▼◀▶ buttons, and then press the OK button.

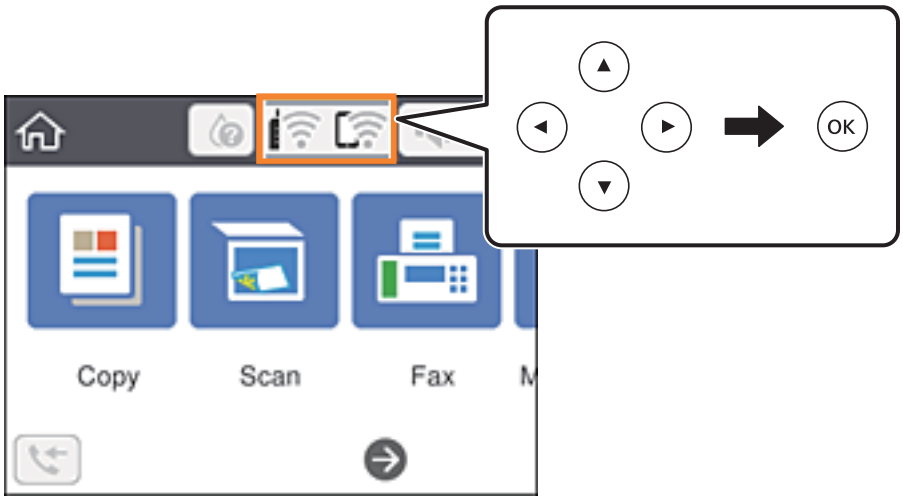

2. Select **Wi-Fi Direct**.

   The Wi-Fi Direct information is displayed.

3. Press the OK button.

4. Select **Change**.

5. Select **Disable Wi-Fi Direct**.

6. Press the OK button.

7. When a completion message is displayed, close the screen.

   The screen automatically closes after a specific length of time.

8. Press the ⌂ button.

Restoring the Network Settings from the Control Panel

You can restore all network settings to their defaults.

1. Select **Settings** on the home screen.

   To select an item, use the ▲▼◀▶ buttons, and then press the OK button.

2. Select **Restore Default Settings** > **Network Settings**.

3. Check the message, and then select **Yes**.

4. When a completion message is displayed, close the screen.

   The screen automatically closes after a specific length of time.

Preparing the Printer

Loading Papers

Available Paper and Capacities

Note:
The paper size displayed differs depending on the driver.

Genuine Epson Paper

Epson recommends using genuine Epson paper to ensure high-quality printouts.

Note:
The availability of paper varies by location. For the latest information on paper available in your area, contact Epson support.

Paper suitable for printing documents

Media Name	Size	Loading Capacity (Sheets)
Epson Bright White Ink Jet Paper	A4	Up to the line indicated by the triangle symbol on the edge guide.

Paper suitable for printing documents and photos

Media Name	Size	Loading Capacity (Sheets)
Epson Matte Paper-Heavyweight	A4	20
Epson Photo Quality Ink Jet Paper	A4	80

Paper suitable for printing photos

Media Name	Size	Loading Capacity (Sheets)
Epson Ultra Glossy Photo Paper	A4, 13×18 cm (5×7 in.), 10×15 cm (4×6 in.)	20*
Epson Premium Glossy Photo Paper	A4, 13×18 cm (5×7 in.), 10×15 cm (4×6 in.)	20*
Epson Premium Semigloss Photo Paper	A4, 13×18 cm (5×7 in.), 10×15 cm (4×6 in.)	20*
Epson Photo Paper Glossy	A4, 13×18 cm (5×7 in.), 10×15 cm (4×6 in.)	20*

* Load one sheet of paper at a time if the paper does not feed correctly or if the printout has uneven colors or smears.

Related Information

➡ "Paper for Borderless Printing" on page 55
➡ "Paper for 2-Sided Printing" on page 56

Commercially Available Paper

Plain papers

Media Name	Size	Loading Capacity (Sheets)
Plain paper Copy paper Letterhead*2	Letter, A4, B5, 16K (195×270 mm), A5, A6, B6	Up to the line indicated by the triangle symbol on the edge guide.*1
	Legal, 8.5×13 in., Indian-Legal	1
	User Defined (mm) 54×86 to 215.9×1200	1

*1 Load one sheet of paper at a time if the paper does not feed correctly or if the printout has uneven colors or smears.

*2 Paper on which information such as the sender's name or corporation name are pre-printed in the header. There must be a margin of 3 mm or more at the top of the paper. 2-sided printing and borderless printing are not available for letterhead paper.

Envelopes

Media Name	Size	Loading Capacity (Envelopes)
Envelope	Envelope #10, Envelope DL, Envelope C6	10

Related Information

➡ "Paper for Borderless Printing" on page 55
➡ "Paper for 2-Sided Printing" on page 56

Paper for Borderless Printing

Genuine Epson Paper

- ❏ Epson Bright White Ink Jet Paper
- ❏ Epson Photo Quality Ink Jet Paper
- ❏ Epson Matte Paper-Heavyweight
- ❏ Epson Ultra Glossy Photo Paper
- ❏ Epson Premium Glossy Photo Paper
- ❏ Epson Premium Semigloss Photo Paper
- ❏ Epson Photo Paper Glossy

Commercially Available Paper

Plain paper, Copy paper (A4, Letter)

Paper for 2-Sided Printing

Genuine Epson Paper

Epson Bright White Ink Jet Paper

Commercially Available Paper

Plain paper, Copy paper*

* For automatic 2-sided printing, you can use Letter, A4, B5, 16K, and User Defined (182 x 257 to 215.9 x 297 mm) paper sizes.

Paper Handling Precautions

❏ Read the instruction sheets supplied with the paper.

❏ To achieve high-quality printouts with genuine Epson paper, use the paper in the environment stated on the sheets supplied with the paper.

❏ Fan and align the edges of the paper before loading. Do not fan or curl photo paper. Doing so may damage the printable side.

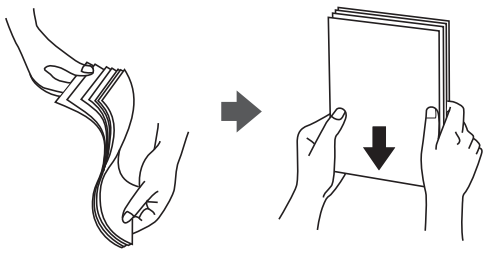

❏ If the paper is curled, flatten it or curl it slightly in the opposite direction before loading. Printing on curled paper may cause paper jams and smears on the printout.



❏ Do not use paper that is wavy, torn, cut, folded, damp, too thick, too thin, or paper that has stickers stuck to it. Using these types of paper causes paper jams and smears on the printout.

❏ Make sure you are using long-grain paper. If you are not sure what type of paper you are using, check the paper packaging or contact the manufacturer to confirm the paper specifications.

Related Information

➡ "Printer Specifications" on page 226

Loading Paper in the Rear Paper Feed

1. Pull out the paper support.

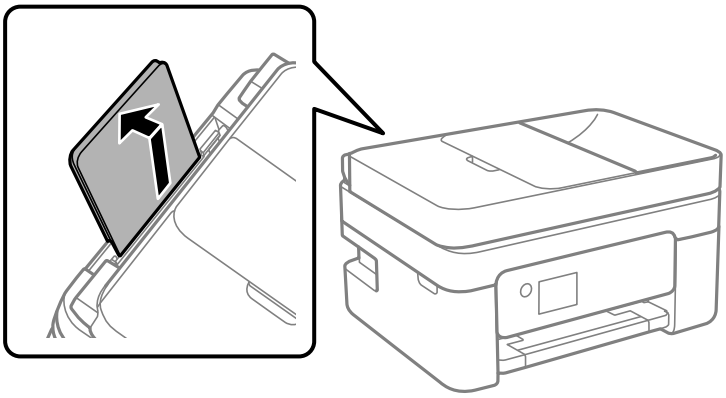

2. Slide the edge guides.

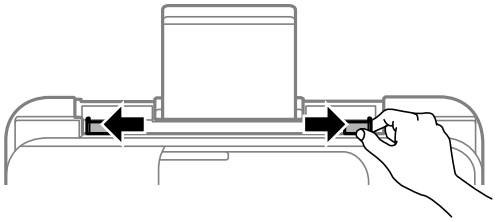

3. Load paper at the center of the paper support with the printable side facing up.

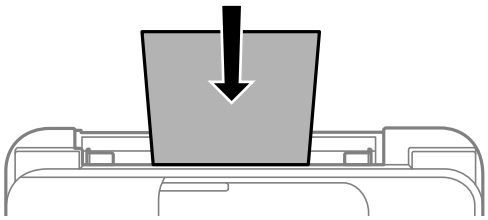

Important:

- ❏ *Do not load more than the maximum number of sheets specified for the paper. For plain paper, do not load above the line just under the ▼ symbol inside the edge guide.*
- ❏ *Load paper short edge first. However, when you have set the long edge as the width of the user defined size, load paper long edge first.*

❏ Pre-punched paper

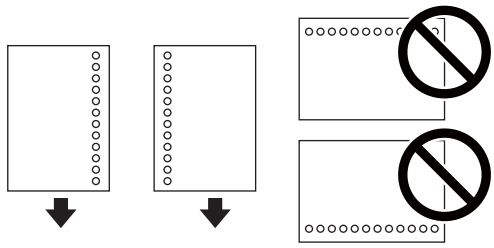

Note:

❏ *Load a single sheet of defined size plain paper with binding holes at the left or right.*

❏ *Adjust the print position of your file to avoid printing over the holes.*

❏ *Automatic 2-sided printing is not available for pre-punched paper.*

4. Slide the edge guides to the edges of the paper.

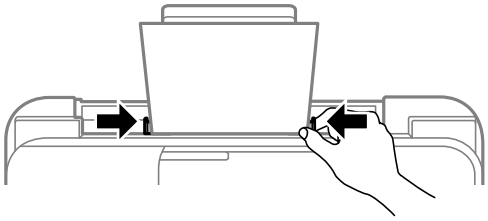

5. On the control panel, set the size and type of the paper you loaded in the rear paper feed.

   To select an item, use the ▲▼◀▶ buttons, and then press the OK button.

   Note:

   ❏ *You can also display the paper size and paper type settings screen by selecting* ***Settings*** > ***General Settings*** > ***Printer Settings*** > ***Paper Source Settings*** > ***Paper Setting****.*

   ❏ *For letterhead paper, select* ***Letterhead*** *as the paper type.*

   ❏ *For letterhead paper, if you print on paper that is smaller than the setting in the printer driver, the printer may print beyond the edges of the paper which can lead to ink smears on your printouts and excess ink building up inside the printer. Make sure you select the correct paper size setting.*

   ❏ *2-sided printing and borderless printing are not available for letterhead paper. Also, the print speed may be slower.*

6. Slide out the output tray.

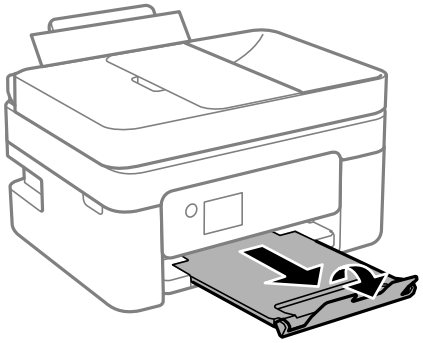

Note:
Return the remaining paper to its package. If you leave it in the printer, the paper may curl or the print quality may decline.

Related Information

➡ "Paper Handling Precautions" on page 56
➡ "Available Paper and Capacities" on page 54
➡ "Loading Envelopes and Precautions" on page 59
➡ "Loading Long Papers" on page 60

Loading Envelopes and Precautions

Loading envelopes short edge first at the center with the flap facing down, and slide the edge guides to the edges of the envelopes.

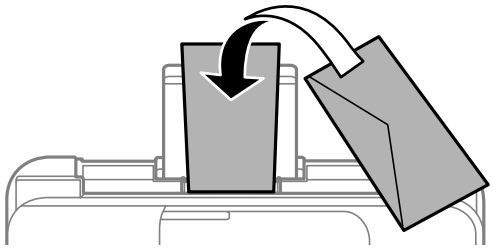

❏ Fan and align the edges of the envelopes before loading. When the stacked envelopes are puffed up with air, press them down to flatten them before loading.

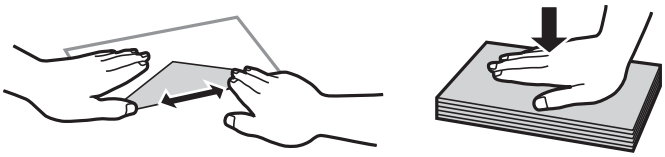

❏ Do not use envelopes that are curled or folded. Using these envelopes causes paper jams and smears on the printout.

❏ Do not use envelopes with adhesive surfaces on the flaps or window envelopes.

❏ Avoid using envelopes that are too thin, as they may curl during printing.

Related Information

➡ "Available Paper and Capacities" on page 54
➡ "Loading Paper in the Rear Paper Feed" on page 57

Loading Long Papers

When loading paper longer than legal size, store the paper support, and then flatten the leading edge of the paper.

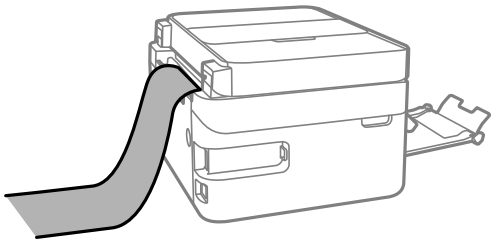

Related Information

➡ "Available Paper and Capacities" on page 54

➡ "Loading Paper in the Rear Paper Feed" on page 57

List of Paper Type

To obtain optimum printing results, select the paper type that suits the paper.

Media Name	Media Type	
	Control Panel	Printer Driver
Epson Bright White Ink Jet Paper	Plain paper	Plain paper
Epson Ultra Glossy Photo Paper	Ultra Glossy	Epson Ultra Glossy
Epson Premium Glossy Photo Paper	Prem. Glossy	Epson Premium Glossy
Epson Premium Semigloss Photo Paper	Prem. Semigloss	Epson Premium Semigloss
Epson Photo Paper Glossy	Glossy	Photo Paper Glossy
Epson Matte Paper-Heavyweight	Matte	Epson Matte
Epson Photo Quality Ink Jet Paper	Photo Quality Ink Jet	Epson Photo Quality Ink Jet

Placing Originals

Place originals on the scanner glass or the ADF.

You can scan multiple originals at the same time with the ADF.

Available Originals for the ADF

Available Paper Sizes	A4, Letter, 8.5x13 in., Legal
Paper Type	Plain paper
Paper Thickness (Weight of Paper)	64 to 95 g/m^2

Loading Capacity	A4, Letter: 30 sheets or 3.3 mm 8.5x13 in., Legal: 10 sheets

Even when the original meets the specifications for media that can be placed in the ADF, it may not feed from the ADF or the scan quality may decline depending on the paper properties or quality.

> ***Important:***
> *Do not feed photographs or valuable original artwork into the ADF. Misfeeding may wrinkle or damage the original. Scan these documents on the scanner glass instead.*

To prevent paper jams, avoid placing the following originals in the ADF. For these types, use the scanner glass.

- ❏ Originals that are torn, folded, wrinkled, deteriorated, or curled
- ❏ Originals with binder holes
- ❏ Originals held together with tape, staples, paper clips etc.
- ❏ Originals that have stickers or labels stuck to them
- ❏ Originals that are cut irregularly or not right angled
- ❏ Originals that are bound
- ❏ OHPs, thermal transfer paper, or carbon backs

Placing Originals on the ADF

1. Align the edges of the originals.
2. Open the ADF input tray.

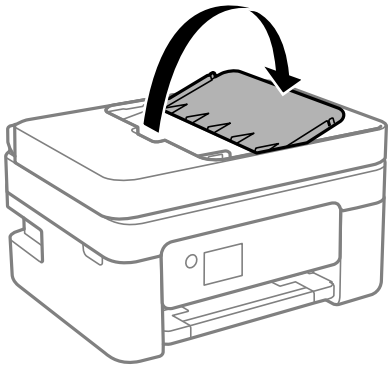

3. Slide out the ADF edge guide.

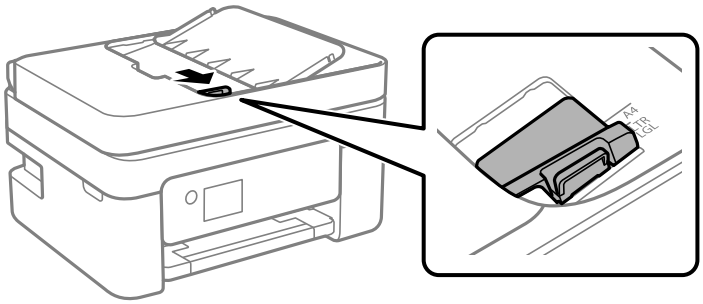

4. Place the originals face-up and short edge first in the ADF, and then slide the ADF edge guide to the edge of the originals.

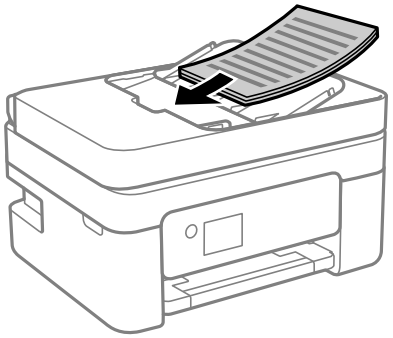

Important:

❏ *Do not load originals above the line indicated by the triangle symbol on the ADF.*

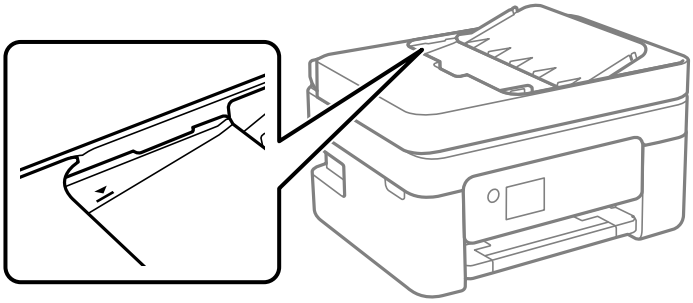

❏ *Do not add originals while scanning.*

Placing Originals on the ADF for 2-up Copying

Place the originals in the direction shown in the illustration, and then select the orientation setting.

❏ Portrait originals: Select **Portrait** on the control panel as described below.

Copy > **Advanced Settings** > **Original Orientation** > **Portrait**

Place the originals on the ADF in the direction of the arrow.



❏ Landscape originals: Select **Landscape** on the control panel as described below.

Copy > **Advanced Settings** > **Original Orientation** > **Landscape**

Place the originals on the ADF in the direction of the arrow.

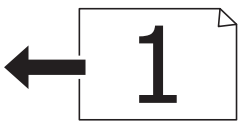

Placing Originals on the Scanner Glass

> ***Caution:***
> *Be careful not to trap your hand or fingers when opening or closing the document cover. Otherwise you may be injured.*

> ***Important:***
> *When placing bulky originals such as books, prevent exterior light from shining directly onto the scanner glass.*

1. Open the document cover.

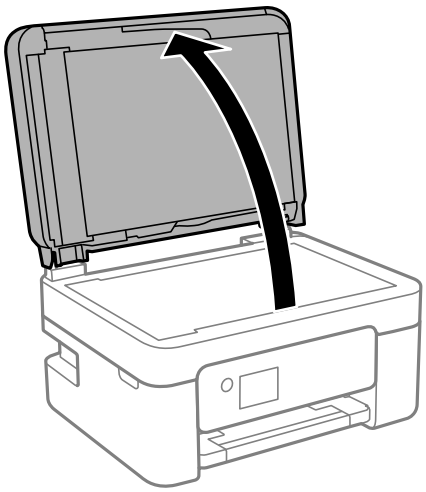

2. Remove any dust or stains on the surface of the scanner glass using a soft, dry, clean cloth.

   Note:
   If there is any trash or dirt on the scanner glass, the scanning range may expand to include it, so the image of the original may be displaced or reduced.

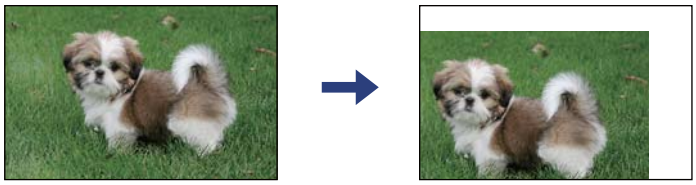

3. Place the original face-down and slide it to the corner mark.

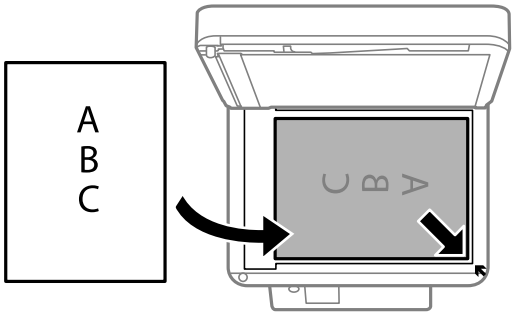

Note:

❏ *A range of 1.5 mm from the corner of the scanner glass is not scanned.*

❏ *When originals are placed in the ADF and on the scanner glass, priority is given to the originals in the ADF.*

4. Close the cover gently.

> ***Important:***
> *Do not apply too much force to the scanner glass or the document cover. Otherwise, they may be damaged.*

5. Remove the originals after scanning.

Note:
If you leave the originals on the scanner glass for a long time, they may stick to the surface of the glass.

Placing an ID Card for Copying

Place an ID card 5 mm away from the corner mark of the scanner glass.

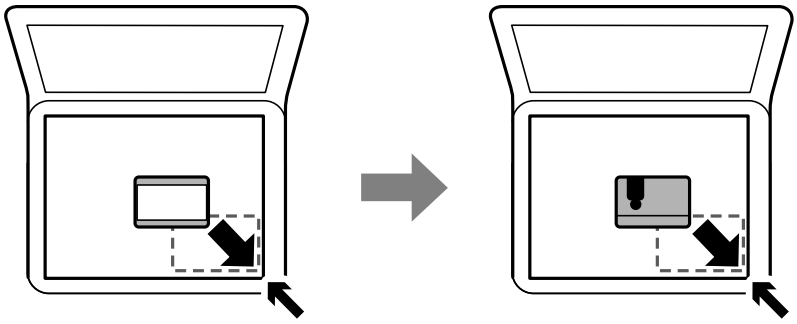

Managing Contacts

Registering a contacts list allows you to easily enter destinations. You can register up to 100 entries, and you can use the contacts list when you enter a fax number.

Registering or Editing Contacts

1. Select **Fax** on the home screen.

   To select an item, use the ▲ ▼ ◀ ▶ buttons, and then press the OK button.

2. Select **Contacts**.

3. Do one of the following.

   ❏ To register a new contact, select **Add Entry** by pressing the + button, and then select **Add Contact**.

   ❏ To edit a contact, move the cursor to the target contact by using the ▲ ▼ buttons, press the ▶ button, and then select **Edit**.

❏ To delete a contact, move the cursor to the target contact by using the ▲ ▼ buttons, and then press the ▶ button. Select **Delete**, and then select **Yes**. You do not have to perform following procedures.

4. Make the necessary settings.

   Note:
   *When entering a fax number, enter an external access code at the beginning of the fax number if your phone system is PBX and you need the access code to get an outside line. If the access code has been set in the **Line Type** setting, enter a hash (#) instead of the actual access code. To add a pause (pause for three seconds) during dialing, enter a hyphen (-).*

5. Select **Done** to apply the settings.

Related Information

➡ "Entering Characters" on page 21

Registering or Editing Grouped Contacts

Adding contacts to a group allows you to send a fax to multiple destinations at the same time.

1. Select **Fax** on the home screen.

   To select an item, use the ▲ ▼ ◀ ▶ buttons, and then press the OK button.

2. Select **Contacts**.

3. Do one of the following.

   ❏ To register a new grouped contacts, select **Add Entry** by pressing the + button, and then select **Add Group**.

   ❏ To edit a grouped contacts, move the cursor to the target grouped contact by using the ▲ ▼ buttons, press the ▶ button, and then select **Edit**.

   ❏ To delete a grouped contacts, move the cursor to the target grouped contact by using the ▲ ▼ buttons, and then press the ▶ button. Select **Delete**, and then select **Yes**. You do not have to perform following procedures.

4. Enter or edit the **Group Name** and the **Index Word**, and then select **Contact(s) Added to the Group (Required)**.

5. Select the contacts that you want to register in the group by pressing the OK button, and then select **Close**.

   Note:
   ❏ *You can register up to 99 contacts.*
   ❏ *To deselect a contact, press the OK button again.*

6. Select **Done** to apply the settings.

Related Information

➡ "Entering Characters" on page 21

Register Contacts on a Computer

Using Web Config, you can create a contact list on your computer and import it to the printer.

1. Access Web Config.
2. Select **Advanced Settings** from the list at the top right of the window.
3. Select **Contacts**.
4. Select the number that you want to register, and then click **Edit**.
5. Enter **Name**, **Index Word**, **Fax Number**, and **Fax Speed**.
6. Click **Apply**.

Related Information

➡ "Application for Configuring Printer Operations (Web Config)" on page 177
➡ "Running Web Config on a Web Browser" on page 177

Destination Setting Items

Items	Settings and Explanation
Name	Enter a name displayed in the contacts in 30 characters or less in Unicode (UTF-8). If you do not specify this, leave it blank.
Index Word	Enter words to search in 30 characters or less in Unicode (UTF-8). If you do not specify this, leave it blank.
Type	This item is fixed as **Fax**. You cannot change this setting.
Fax Number	Enter between 1 and 64 characters using 0-9 - * # and space.
Fax Speed	Select a communication speed for a destination.

Registering Destinations as a Group

1. Access Web Config.
2. Select **Advanced Settings** from the list at the top right of the window.
3. Select **Contacts**.
4. Select the number that you want to register, and then click **Edit**.
5. Enter a **Name** and **Index Word**.
6. Select a group from **Type**.

7. Click **Select** for **Contact(s) for Group**.

   The available destinations are displayed.

8. Select the destination that you want to register to the group, and then click **Select**.

   Note:
   Destinations can be registered to multiple groups.

9. Click **Apply**.

Related Information

➡ "Application for Configuring Printer Operations (Web Config)" on page 177
➡ "Running Web Config on a Web Browser" on page 177

Menu Options for Settings

Select **Settings** on the home screen of the printer to make various settings.

Menu Options for General Settings

Select the menus on the control panel as described below.

Settings > **General Settings**

Basic Settings

Select the menus on the control panel as described below.

Settings > **General Settings** > **Basic Settings**

Sound:

Adjust the volume.

❏ Mute

Select **On** to mute all sound.

❏ Normal Mode

Select the volume such as **Button Press**.

❏ Quiet Mode

Select the volume such as **Button Press** in **Quiet Mode**.

Sleep Timer:

Adjust the time period to enter a sleep mode (energy saving mode) when the printer has not performed any operations. The LCD screen turns black when the setting time passes.

Power Off Timer:

Your product may have this feature or the **Power Off Settings** feature depending on the location of purchase.

Select this setting to turn the printer off automatically when it is not used for a specified period of time. You can adjust the time before power management is applied. Any increase will affect the product's energy efficiency. Please consider the environment before making any change.

Power Off Settings:

Your product may have this feature or the **Power Off Timer** feature depending on the location of purchase.

❏ Power Off If Inactive

Select this setting to turn the printer off automatically if it is not used for a specified period of time. Any increase will affect the product's energy efficiency. Please consider the environment before making any change.

❏ Power Off If Disconnected

Select this setting to turn the printer off after a specified period of time when all ports including the LINE port are disconnected. This feature may not be available depending on your region.

See the following website for the specified period of time.

https://www.epson.eu/energy-consumption

Date/Time Settings:

❏ Date/Time

Enter the current date and time.

❏ Daylight Saving Time

Select the summer time setting that applies to your area.

❏ Time Difference

Enter the time difference between your local time and UTC (Coordinated Universal Time).

Country/Region:

Select the country or region in which you are using your printer. If you change the country or region, your fax settings return to their defaults and you must select them again.

Language:

Select the language used on the LCD screen.

Operation Time Out:

Select **On** to return to the initial screen when no operations have been performed for the specified time.

Keyboard

Change the layout of the keyboard on the LCD screen.

Related Information

➡ "Saving Power - Control Panel" on page 74

➡ "Entering Characters" on page 21

Printer Settings

Select the menus on the control panel as described below.

Settings > **General Settings** > **Printer Settings**

Paper Source Settings:

Paper Setting:

Select the paper size and paper type you loaded in the paper source. You can make **Favorite Paper Settings** in paper size and paper type.

A4/Letter Auto Switching:

Select **On** to feed paper from the paper source set as A4 size when there is no paper source set as Letter, or feed from the paper source set as Letter size when there is no paper source set as A4.

Error Notice:

Select **On** to display an error message when the selected paper size or type does not match the loaded paper.

Paper Setup Auto Display:

Select **On** to display the **Paper Setting** screen when loading paper in the paper source. If you disable this feature, you cannot print from an iPhone, iPad, or iPod touch using AirPrint.

Universal Print Settings:

These print settings are applied when you print by an external device without using the printer driver. The offset settings are applied when you print using the printer driver.

Top Offset:

Adjust the top margin of the paper.

Left Offset:

Adjust the left margin of the paper.

Top Offset in Back:

Adjust the top margin for the back of the page when performing 2-sided printing.

Left Offset in Back:

Adjust the left margin for the back of the page when performing 2-sided printing.

Check Paper Width:

Select **On** to check the paper width before printing. This prevents printing beyond the edges of the paper when the paper size setting is incorrect, but this may lower the print speed.

Skip Blank Page:

Skips blank pages in the print data automatically.

Auto Error Solver:

Select an action to perform when a 2-sided printing error or a memory full error occurs.

❏ On

Displays a warning and prints in single-sided mode when a 2-sided printing error occurs, or prints only what the printer could process when a memory full error occurs.

❏ Off

Displays an error message and cancels printing.

Quiet Mode:

Select **On** to reduce noise during printing, however, this may lower the print speed. Depending on the paper type and print quality settings you selected, there may be no difference in the printer's noise level.

Ink Drying Time:

Select the ink drying time you want to use when performing 2-sided printing. The printer prints the other side after printing one side. If your printout is smeared, increase the time setting.

PC Connection via USB:

Select **Enable** to allow a computer to access the printer when connected by USB. When **Disable** is selected, printing and scanning that is not sent over a network connection is restricted.

Network Settings

Select the menus on the control panel as described below.

Settings > **General Settings** > **Network Settings**

Wi-Fi Setup:

Set up or change wireless network settings. Choose the connection method from the following and then follow the instructions on the LCD panel.

❏ Wi-Fi (Recommended)

❏ Wi-Fi Direct

Network Status:

Displays or prints the current network settings.

❏ Wi-Fi Status

❏ Wi-Fi Direct Status

❏ Print Status Sheet

Connection Check:

Checks the current network connection and prints a report. If there are any problems with the connection, see the report to solve the problem.

Advanced:

Make the following detailed settings.

❏ Device Name

❏ TCP/IP

❏ Proxy Server

❏ IPv6 Address

Related Information

➡ "Making Wi-Fi Settings by Entering the SSID and Password" on page 35
➡ "Making Wi-Fi Settings by Push Button Setup (WPS)" on page 37
➡ "Making Wi-Fi Settings by PIN Code Setup (WPS)" on page 38
➡ "Printing a Network Status Sheet" on page 48
➡ "Checking the Network Connection Status" on page 41
➡ "Making Advanced Network Settings" on page 40

Web Service Settings

Select the menus on the control panel as described below.

Settings > **General Settings** > **Web Service Settings**

Epson Connect Services:

Displays whether the printer is registered and connected to Epson Connect.

You can register to the service by selecting **Register** and follow the instructions.

When you have registered, you can change the following settings.

❏ Suspend/Resume

❏ Unregister

For details, see the following web site.

https://www.epsonconnect.com/

http://www.epsonconnect.eu (Europe only)

Google Cloud Print Services:

Displays whether the printer is registered and connected to Google Cloud Print services.

When you have registered, you can change the following settings.

❏ Enable/Disable

❏ Unregister

For details on registering to Google Cloud Print services, see the following web site.

https://www.epsonconnect.com/

http://www.epsonconnect.eu (Europe only)

Related Information

➡ "Printing Using a Network Service" on page 187

Fax Settings

Select the menu on the control panel as described below.

Settings > **General Settings** > **Fax Settings**

See Related Information below.

Related Information

➡ "Menu Options for Faxing" on page 148

Menu Options for Supply Status

Select the menu on the control panel as described below.

Settings > **Supply Status**

Displays the approximate level of the ink and service life of the maintenance box.

When  is displayed, ink is running low or the maintenance box is nearly full. When  is displayed, you need to replace the item as ink is expended or the maintenance box is full.

You can replace ink cartridges or print supply status information from this screen.

Menu Options for Maintenance

Select the menus on the control panel as described below.

Settings > **Maintenance**

Print Head Nozzle Check:

Select this feature to check if the print head nozzles are clogged. The printer prints a nozzle check pattern.

Print Head Cleaning:

Select this feature to clean clogged nozzles in the print head.

Print Head Alignment:

Select this feature to adjust the print head to improve print quality.

❏ Vertical Alignment

Select this feature if your printouts look blurry or text and lines are misaligned.

❏ Horizontal Alignment

Select this feature if horizontal banding appears at regular intervals in your printouts.

Ink Cartridge Replacement:

Use this feature to replace the ink cartridges before the ink is expended.

Paper Guide Cleaning:

Select this feature if there are ink stains on the internal rollers. The printer feeds paper to clean the internal rollers.

Related Information

➡ "Checking and Cleaning the Print Head" on page 168
➡ "Aligning the Print Head" on page 170
➡ "Replacing Ink Cartridges" on page 162
➡ "Cleaning the Paper Path for Ink Smears" on page 170

Menu Options for Print Status Sheet

Select the menus on the control panel as described below.

Settings > **Print Status Sheet**

Configuration Status Sheet:

Print information sheets showing the current printer status and settings.

Supply Status Sheet:

Print information sheets showing the status of consumables.

Usage History Sheet:

Print information sheets showing the usage history of the printer.

Menu Options for Print Counter

Select the menus on the control panel as described below.

Settings > **Print Counter**

Displays the total number of prints, B&W prints, and color prints including items such as the status sheet from the time you purchased the printer.

Menu Options for User Settings

Select the menus on the control panel as described below.

Settings > **User Settings**

You can change the default settings of the following menus.

❏ Copy

❏ Scan to Computer

❏ Scan to Cloud

❏ Fax

Menu Options for Customer Research

Select the menus on the control panel as described below.

Settings > **Customer Research**

Select **Approve** to provide product usage information such as the number of prints to Seiko Epson Corporation.

Menu Options for Restore Default Settings

Select the menus on the control panel as described below.

Settings > **Restore Default Settings**

Resets the following menus to their defaults.

- ❏ Network Settings
- ❏ Copy Settings
- ❏ Scan Settings
- ❏ Fax Settings
- ❏ Clear All Data and Settings

Menu Options for Firmware Update

Select the menus on the control panel as described below.

Settings > **Firmware Update**

Update:

Check if the latest version of the firmware has been uploaded to the network server. If an update is available, you can select whether or not to start updating.

Notification:

Select **On** to receive a notification if a firmware update is available.

Saving Power

The printer enters sleep mode or turns off automatically if no operations are performed for a set period. You can adjust the time before power management is applied. Any increase will affect the product's energy efficiency. Please consider the environment before making any change.

Saving Power - Control Panel

1. Select **Settings** on the home screen.

   To select an item, use the ▲ ▼ ◀ ▶ buttons, and then press the OK button.

2. Select **General Settings** > **Basic Settings**.

3. Do one of the following.

   Note:
   *Your product may have the **Power Off Settings** or **Power Off Timer** feature depending on the location of purchase.*

   - ❏ Select **Sleep Timer** or **Power Off Settings** > **Power Off If Inactive** or **Power Off If Disconnected**, and then make settings.
   - ❏ Select **Sleep Timer** or **Power Off Timer**, and then make settings.

Fax Settings

Before Using Fax Features

Set up the following to use the fax features.

❏ Connect the printer correctly with the phone line and, if necessary, with a phone

❏ Complete the **Fax Setting Wizard**, which is required to make basic settings.

Set the following as necessary.

❏ **Contacts** registration

❏ **User Settings** that define default values for **Fax** menu items

❏ **Report Settings** to print reports when faxes are sent or received

Related Information

➡ "Connecting the Printer to a Phone Line" on page 76
➡ "Making the Printer Ready to Send and Receive Faxes (Using Fax Setting Wizard)" on page 79
➡ "Making Settings Individually for Printer's Fax Features" on page 81
➡ "Menu Options for Fax Settings" on page 85
➡ "Network Settings" on page 23
➡ "Managing Contacts" on page 64
➡ "Menu Options for User Settings" on page 73
➡ "Report Settings Menu" on page 88

Connecting the Printer to a Phone Line

Compatible Telephone Lines

You can use the printer over standard analogue telephone lines (PSTN = Public Switched Telephone Network) and PBX (Private Branch Exchange) telephone systems.

You may not be able to use the printer with the following phone lines or systems.

❏ VoIP phone line such as DSL or fiber-optic digital service

❏ Digital phone line (ISDN)

❏ Some PBX telephone systems

❏ When adapters such as terminal adapters, VoIP adapters, splitters, or DSL router are connected between the telephone wall jack and the printer

Connecting the Printer to a Phone Line

Connect the printer to a telephone wall jack using an RJ-11 (6P2C) phone cable. When connecting a telephone to the printer, use a second RJ-11 (6P2C) phone cable.

Depending on the area, a phone cable may be included with the printer. If it is included, use that cable.

You may need to connect the phone cable to an adapter provided for your country or region.

Note:
Remove the cap from the EXT. port of the printer only when connecting your telephone to the printer. Do not remove the cap if you are not connecting your telephone.

In areas where lightning strikes occur frequently, we recommend that you use a surge protector.

Connecting to a Standard Phone Line (PSTN) or PBX

Connect a phone cable from the telephone wall jack or PBX port to the LINE port on the back of the printer.

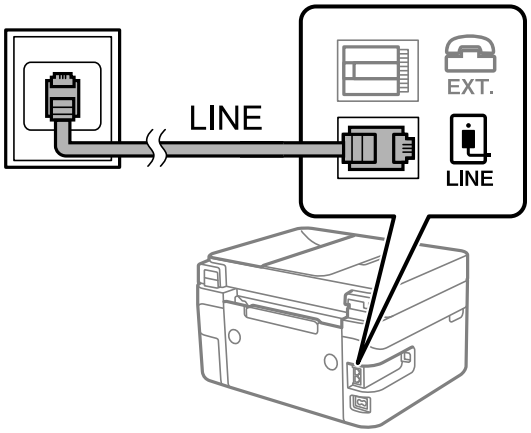

Connecting to DSL or ISDN

Connect a phone cable from the DSL modem or the ISDN terminal adapter to the LINE port on the back of the printer. See the documentation provided with the modem or the adapter for more details.

Note:
If your DSL modem is not equipped with a built-in DSL filter, connect a separate DSL filter.

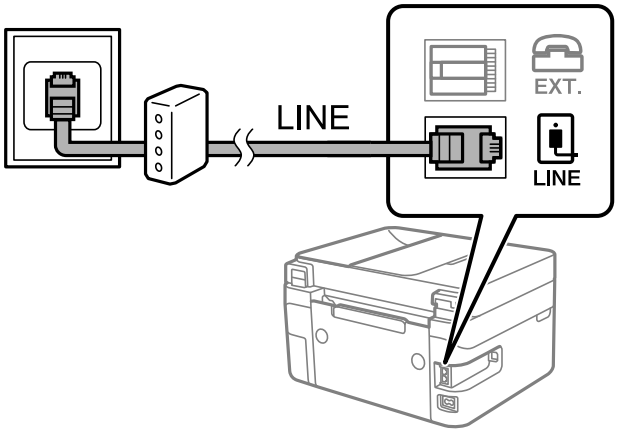

Connecting Your Phone Device to the Printer

When using the printer and your telephone on a single phone line, connect the telephone to the printer.

Note:

- ❏ *If your phone device has a fax function, disable the fax function before connecting. See the manuals that came with the phone device for details. Depending on the model of the phone device, the fax function cannot be completely disabled, so you may not be able to use it as an external phone.*
- ❏ *If you connect an answering machine, make sure the printer's **Rings to Answer** setting is set higher than the number of rings your answering machine is set to answer a call.*

1. Remove the cap from the EXT. port on the back of the printer.

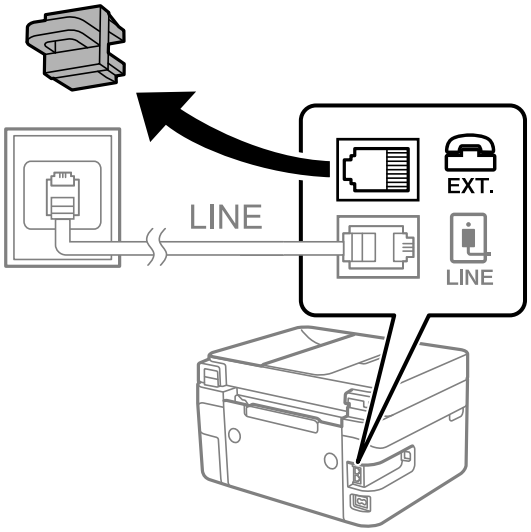

2. Connect the phone device and the EXT. port with a phone cable.

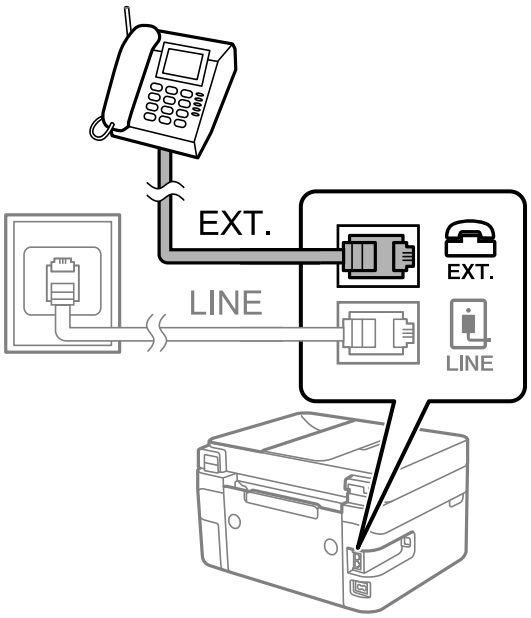

Note:

When sharing a single phone line, make sure you connect the phone device to the EXT. port of the printer. If you split the line to connect the phone device and the printer separately, the phone and the printer do not work correctly.

3. Select **Fax** on the home screen.

   To select an item, use the ▲▼◀▶ buttons, and then press the OK button.

4. Pick up the handset.

   If a message to start sending or receiving faxes is displayed as shown on the following screen, the connection has been established.

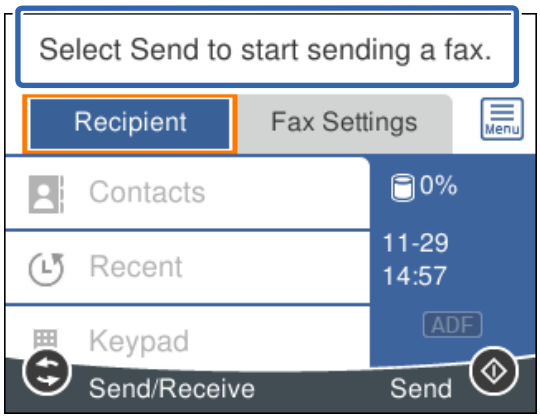

Related Information

➡ "Making the Printer Ready to Send and Receive Faxes (Using Fax Setting Wizard)" on page 79
➡ "Making Settings to Use an Answering Machine" on page 83
➡ "Making Settings to Receive Faxes Operating Only a Connected Phone (Remote Receive)" on page 83
➡ "Setting Receive Mode" on page 81

Making the Printer Ready to Send and Receive Faxes (Using Fax Setting Wizard)

Fax Setting Wizard configures the basic fax features to make the printer ready to send and receive faxes.

The Wizard is displayed automatically when the printer is turned on for the first time. You can also display the wizard manually from the printer's control panel. You need to run the wizard again in case the wizard is skipped when the printer is first turned on or when the connection environment has changed.

❏ The items below are what you can set through the wizard.

- ❏ **Header** (**Your Phone Number** and **Fax Header**)
- ❏ **Receive Mode** (**Auto** or **Manual**)

❏ The items below are set automatically according to the connection environment.

- ❏ **Dial Mode** (such as **Tone** or **Pulse**)
- ❏ **Line Type** (**PSTN** or **PBX**)
- ❏ **Dial Tone Detection**
- ❏ **Distinctive Ring Detection (DRD) Setting**

❏ Other items in **Basic Settings** remain as they are.

Start **Fax Setting Wizard** to make **Basic Settings**, following the on-screen instructions.

1. Make sure the printer is connected to the phone line.

   Note:
   Because an automatic fax connection check runs at the end of the wizard, the printer must be connected to the phone line before starting the wizard.

2. Select **Settings** on the home screen on the printer's control panel.

   To select an item, use the ▲▼◀▶ buttons, and then press the OK button.

3. Select **General Settings** > **Fax Settings** > **Fax Setting Wizard**.

4. Check the message on the screen displayed, and then select**Proceed**.

   The wizard begins.

5. On the fax header entry screen, enter the sender name such as your company name, and then select **OK**.

   Note:
   Your sender name and your fax number appear as the header for outgoing faxes.

6. On the phone number entry screen, enter your fax number, and then select **OK**.

7. On the **Distinctive Ring Detection (DRD) Setting** screen, make the following settings.

   ❏ If you have subscribed to a distinctive ring service from your telephone company: Select **Settings**, and then select the ring pattern to be used for incoming faxes.

   - If you select **All**, go to step 8.
   - If you select any other setting, **Receive Mode** is automatically set to **Auto**. Go to step 10.

   ❏ If you do not need to set this option: Select **Skip**, and then go to step 10.

   Note:
   ❏ *Distinctive ring services, offered by many telephone companies (the service name differs by company), allows you to have several phone numbers on one phone line. Each number is assigned a different ring pattern. You can use one number for voice calls and another for fax calls. Select the ring pattern assigned to fax calls in **DRD**.*

   ❏ *Depending on the region, **On** and **Off** are displayed as the **DRD** options. Select **On** to use the distinctive ring feature.*

8. On the **Receive Mode Setting** screen, select whether you are using your phone device connected to the printer.

   ❏ When connected: Select **Yes**, and then go to the next step.

   ❏ When not connected: Select **No**, and then go to step 10. **Receive Mode** is set to **Auto**.

9. On the **Receive Mode Setting** screen, select whether you want to receive faxes automatically.

   ❏ To receive automatically: Select **Yes**. **Receive Mode** is set to **Auto**.

   ❏ To receive manually: Select **No**. **Receive Mode** is set to **Manual**.

10. Check the settings you made on the screen displayed, and then select **Proceed**.

    To correct or change settings, press the ⮌ button.

11. On the **Run Check Fax Connection** screen, select **Start Checking** to run the fax connection check, and when the screen prompts you to print the check result, select **Print**.

    A report of the check result that shows the connection status is printed.

Note:

❏ *If there are any errors reported, follow the instructions on the report to solve them.*

❏ *If the **Select Line Type** screen is displayed, select the line type.*

*- When you are connecting the printer to a PBX phone system or terminal adapter, select **PBX**.*

*- When you are connecting the printer to a standard phone line, select **PSTN**, and then select **Do Not Detect** on the **Confirmation** screen displayed. However, setting this to **Do Not Detect** may cause the printer to skip the first digit of a fax number when dialing and send the fax to the wrong number.*

Related Information

➡ "Connecting the Printer to a Phone Line" on page 77
➡ "Setting Receive Mode" on page 81
➡ "Making Settings to Use an Answering Machine" on page 83
➡ "Making Settings to Receive Faxes Operating Only a Connected Phone (Remote Receive)" on page 83
➡ "Basic Settings Menu" on page 86

Making Settings Individually for Printer's Fax Features

You can configure the printer's fax features individually using the printer's control panel. The settings made using **Fax Setting Wizard** can also be changed. For more details, see the descriptions of the **Fax Settings** Menu.

Related Information

➡ "Menu Options for Fax Settings" on page 85

Setting Receive Mode

There are two options in **Receive Mode** for receiving incoming faxes. You can make settings in the menu below.

Settings > **General Settings** > **Fax Settings** > **Basic Settings** > **Receive Mode**

Receive Mode	Use of Phone Line
Manual	Mainly for phoning, but also for faxing
Auto	Only for faxing (external phone device is not required)
	Mainly for faxing, and sometimes phoning

Related Information

➡ "Usage of Manual Mode" on page 82
➡ "Usage of Auto Mode" on page 82
➡ "Basic Settings Menu" on page 86

Usage of Manual Mode

Receiving Faxes

When the telephone rings, you can answer the ringing manually by picking up the handset.

❏ When you hear a fax signal (baud):

Select **Fax** on the printer's home screen, select **Send/Receive** > **Receive**, and then select ⓕ. Next, hang up the handset.

To select an item, use the ▲ ▼ ◀ ▶ buttons, and then press the OK button.

❏ If the ringing is for a voice call:

You can answer the phone as normal.

Receiving Faxes Using only a Connected Telephone

When **Remote Receive** is set, you can receive faxes by simply entering the **Start Code**.

When the telephone rings, pick up the handset. When you hear a fax tone (baud), dial the two digit **Start Code**, and then hang up the handset.

Related Information

➡ "Making Settings to Receive Faxes Operating Only a Connected Phone (Remote Receive)" on page 83

Usage of Auto Mode

Receiving Faxes Without an External Phone Device

The printer automatically switches to receive faxes when the number of rings you set in **Rings to Answer** is complete.

Note:
*We recommend setting **Rings to Answer** to as low a number as possible.*

Receiving Faxes With an External Phone Device

A printer with an external phone device works as follows.

❏ If your phone device is the answering machine and when it answers within the number of rings set in **Rings to Answer**:

- If the ringing is for a fax: The printer automatically switches to receive faxes.
- If the ringing is for a voice call: The answering machine can receive voice calls and record voice messages.

❏ When you pick up the handset within the number of rings set in **Rings to Answer**:

- If the ringing is for a fax: You can receive the fax using the same steps as **Manual**.
- If the ringing is for a voice call: You can answer the phone as normal.

❏ When the printer automatically switches to receive faxes:

- If the ringing is for a fax: The printer starts receiving faxes.
- If the ringing is for a voice call: You cannot answer the phone. Ask the person to call you back.

Note:
*Set the **Rings to Answer** settings of the printer to a higher number than the number of rings for the answering machine. Otherwise, the answering machine cannot receive voice calls to record voice messages. For details on setting up the answering machine, see the manual supplied with the answering machine.*

Related Information

➡ "Making Settings to Use an Answering Machine" on page 83
➡ "Usage of Manual Mode" on page 82

Making Settings When You Connect an External Phone Device

Making Settings to Use an Answering Machine

You need settings to use an answering machine.

1. Select **Settings** on the home screen on the printer's control panel.

   To select an item, use the ▲ ▼ ◀ ▶ buttons, and then press the OK button.

2. Select **General Settings** > **Fax Settings** > **Basic Settings**.

3. Set **Receive Mode** to **Auto**.

4. Set the **Rings to Answer** setting of the printer to a higher number than the number of rings for the answering machine.

   If **Rings to Answer** is set lower than the number of rings for the answering machine, the answering machine cannot receive voice calls to record voice messages. See the manuals that came with the answering machine for its settings.

The printer's **Rings to Answer** setting may not be displayed, depending on the region.

Related Information

➡ "Usage of Auto Mode" on page 82
➡ "Basic Settings Menu" on page 86

Making Settings to Receive Faxes Operating Only a Connected Phone (Remote Receive)

You can start receiving incoming faxes by only picking up the handset and operating the phone, without operating the printer at all.

The **Remote Receive** feature is available for telephones that support tone dialing.

1. Select **Settings** on the home screen on the printer's control panel.

   To select an item, use the ▲ ▼ ◀ ▶ buttons, and then press the OK button.

2. Select **General Settings** > **Fax Settings** > **Basic Settings** > **Remote Receive**.

3. Set **Remote Receive** to **On**.
4. Select **Start Code**, enter a two digit code (you can enter 0 to 9, *, and #), and then select **OK**.
5. Select **Done** to apply the settings.

Related Information

➡ "Usage of Manual Mode" on page 82
➡ "Basic Settings Menu" on page 86

Making Settings for Blocking Junk Faxes

You can block junk faxes.

1. Select **Settings** on the home screen on the printer's control panel.

   To select an item, use the ▲▼◀▶ buttons, and then press the OK button.
2. Select **General Settings** > **Fax Settings** > **Basic Settings** > **Rejection Fax**.
3. Set the condition to block junk faxes.

   Select **Rejection Fax**, and then enable the following options.

   ❏ Rejection Number List: Rejects faxes that are in the Rejection Number List.

   ❏ Fax Header Blank: Rejects faxes that have blank header information.

   ❏ Unregistered Contacts: Rejects faxes that have not been added to the contact list.
4. Press ⮌ button to return to the **Rejection Fax** screen.
5. If you are using the **Rejection Number List**, select **Edit Blocked Number list**, and then edit the list.

Related Information

➡ "Basic Settings Menu" on page 86

Making Settings to Send and Receive Faxes on a Computer

To send and receive faxes on a computer, FAX Utility must be installed on the computer connected by network or USB cable .

Making Save to Computer Setting to Receive Faxes

You can receive faxes on a computer by using the FAX Utility. Install FAX Utility on the computer and make the setting. For details, see Basic Operations in the FAX Utility help (displayed on the main window).

The setting item below on the printer's control panel is set to **Yes**, and the faxes received can be saved on the computer.

Settings > **General Settings** > **Fax Settings** > **Receive Settings** > **Save to Computer**

Related Information

➡ "Receive Settings Menu" on page 87

Making Save to Computer Setting to Also Print on the Printer to Receive Faxes

You can make the setting to print received faxes on the printer as well as save them on a computer.

1. Select **Settings** on the home screen on the printer's control panel.

   To select an item, use the ▲▼◀▶ buttons, and then press the OK button.

2. Select **General Settings** > **Fax Settings** > **Receive Settings**.

3. Select **Save to Computer** > **Yes and Print**.

Related Information

➡ "Receive Settings Menu" on page 87

Making Save to Computer Setting not to Receive Faxes

To set the printer not to save received faxes on the computer, change the settings on the printer.

Note:
You can also change the settings using the FAX Utility. However, if there are any faxes that have been unsaved to the computer, the feature does not work.

1. Select **Settings** on the home screen on the printer's control panel.

   To select an item, use the ▲▼◀▶ buttons, and then press the OK button.

2. Select **General Settings** > **Fax Settings** > **Receive Settings**.

3. Select **Save to Computer** > **No**.

Related Information

➡ "Receive Settings Menu" on page 87

Menu Options for Fax Settings

Selecting **Settings** > **General Settings** > **Fax Settings** from the printer's control panel displays this menu.

Check Fax Connection

You can find the menu on the printer's control panel below:

Settings > **General Settings** > **Fax Settings** > **Check Fax Connection**

Selecting **Check Fax Connection** checks that the printer is connected to the phone line and ready for fax transmission. You can print the check result on A4 size plain paper.

Fax Setting Wizard

You can find the menu on the printer's control panel below:

Settings > **General Settings** > **Fax Settings** > **Fax Setting Wizard**

Selecting **Fax Setting Wizard** makes basic fax settings. Follow the on-screen instructions.

Related Information

➡ "Making the Printer Ready to Send and Receive Faxes (Using Fax Setting Wizard)" on page 79

Basic Settings Menu

You can find the menu on the printer's control panel below:

Settings > **General Settings** > **Fax Settings** > **Basic Settings**

Item	Description
Fax Speed	Select the fax transmission speed. We recommend selecting **Slow(9,600bps)** when a communication error occurs frequently, when sending/receiving a fax to/from abroad, or when you are using an IP (VoIP) phone service.
ECM	Automatically corrects errors in the fax transmission (Error Correction Mode), mostly caused by telephone line noise. If this is disabled, you cannot send or receive documents in color.
Dial Tone Detection	Detects a dial tone before starting to dial. If the printer is connected to a PBX (Private Branch Exchange) or digital phone line, the printer may fail to start dialing. In this situation, change the **Line Type** setting to **PBX**. If this does not work, disable this feature. However, disabling this feature may drop the first digit of a fax number and send the fax to the wrong number.
Dial Mode	Select the type of phone system to which you have connected the printer. When set to **Pulse**, you can temporarily switch the dialing mode from pulse to tone by pressing ✳ ("T" is entered) while entering numbers on the fax top screen. This setting may not be displayed depending on your region or country.
Line Type	Select the line type to which you have connected the printer. When using the printer in an environment that uses extensions and requires an external access code, such as 0 and 9, to get an outside line, select **PBX** and register the access code. Once you have registered the access code, enter # (hash) instead of the access code when sending a fax to an outside fax number. For an environment that uses a DSL modem or terminal adapter, setting to **PBX** is also recommended. You cannot send faxes to recipients in **Contacts** in which an external access code such as 0 or 9 is set. If you have added recipients in **Contacts** using an external access code such as 0 or 9, set the **Access Code** to **Do Not Use**. Otherwise, you must change the code to # in **Contacts**.
Header	Enter your sender name and fax number. These appear as a header on outgoing faxes. ❏ Your Phone Number: You can enter up to 20 characters using 0-9 + or space. ❏ Fax Header: You can register up to 21 sender names as necessary. You can enter up to 40 characters for each sender name.
Receive Mode	Select the receive mode. For details, see the related Information below.

Item	Description
DRD	If you have subscribed to a distinctive ring service from your telephone company, select the ring pattern to be used for incoming faxes. The distinctive ring service, offered by many telephone companies (the service name differs by company), allows you to have several phone numbers on one phone line. Each number is assigned different ring pattern. You can use one number for voice calls and another for fax calls. Depending on the region, this option may be **On** or **Off**.
Rings to Answer	Select the number of rings that must occur before the printer automatically receives a fax.
Remote Receive	❏ Remote Receive: When you answer an incoming fax call on a phone connected to the printer, you can start receiving the fax by entering the code using the phone. ❏ Start Code: Set the start code of **Remote Receive**. Enter two characters using 0-9, *, #.
Rejection Fax	❏ Rejection Fax: Select options to reject receiving junk faxes. ❏ Rejection Number List: If the other party's phone number is in the rejection number list, set whether to reject the incoming faxes. ❏ Fax Header Blank: If the other party's phone number is blocked, set whether to reject receiving the faxes. ❏ Unregistered Contacts: If the other party's phone number is not in the contacts, set whether to reject receiving the faxes. ❏ Edit Blocked Number list: You can register up to 30 fax numbers to reject the faxes and calls. Enter up to 20 characters using 0-9, *, #, or space.

Related Information

➡ "Making the Printer Ready to Send and Receive Faxes (Using Fax Setting Wizard)" on page 79
➡ "Setting Receive Mode" on page 81
➡ "Making Settings to Receive Faxes Operating Only a Connected Phone (Remote Receive)" on page 83
➡ "Making Settings for Blocking Junk Faxes" on page 84

Receive Settings Menu

You can find the menu on the printer's control panel below:

Settings > **General Settings** > **Fax Settings** > **Receive Settings**

Item	Description
Save to Computer	Saves received faxes as PDF files on a computer connected to the printer. You can set this to **Yes** by using only the FAX Utility. Install FAX Utility on the computer in advance. After setting this to **Yes**, you can change this to **Yes and Print**.
Auto Reduction	Prints received faxes with large-size documents reduced to fit on the paper in the paper source. Reducing may not always be possible depending on the received data. If this is turned off, large documents are printed at their original size on multiple sheets, or a blank second page may be ejected.
Split Page Settings	Prints received faxes with the page split when the size of the received documents is larger than the size of the paper loaded in the printer.

Item	Description
Auto Rotation	Rotates faxes received as landscape-orientated, A5 size documents so that they are printed on A5 size paper. This setting is applied when A5 size is set in **Settings** > **General Settings** > **Printer Settings** > **Paper Source Settings** > **Paper Setting** > **Paper Size**. Selecting **Off**, faxes received as landscape-orientated A5 size, the same width as A4 portrait documents, are assumed and printed as A4 size faxes.
Add Reception Information	Prints reception information on the received fax, even if the sender does not set the header information. The reception information includes the received date and time, sender's ID, and page number (such as "P1"). When **Split Page Settings** is enabled, the split page number is also included.
2-Sided	Prints multiple pages of received faxes on both sides of the paper.
Print Start Timing	Select options to start printing the faxes to receive. ❏ All Pages Received: Printing starts after receiving all of the pages. To start printing from the first page or last page depends on the setting of **Collation Stack** feature. See the explanation for **Collation Stack**. ❏ First Page Received: Starts printing when the first page is received, and then prints in order as the pages are received. If the printer cannot start printing, such as when it is printing other jobs, the printer starts printing received pages as a batch when it is available.
Collation Stack	Since the first page is printed last (output to the top), the printed documents are stacked in the correct page order. When the printer is running low on memory, this feature may not be available.
Print Suspend Time	❏ Print Suspend Time: During the time period you specified from **Time to Stop** through **Time to Restart** you specified, the printer saves documents received in the printer's memory without printing them. This feature can be used for noise prevention at night or to prevent confidential documents from being disclosed while you are away. Before using this feature, make sure there is enough free memory. When you set this to **Off**, you can print the received documents even before the restart time. ❏ Time to Stop: Stops printing documents. ❏ Time to Restart: Restarts printing documents automatically.
Quiet Mode	Reduces the noise the printer makes when printing faxes, however, print speed may be reduced.

Report Settings Menu

You can find the menu on the printer's control panel below:

Settings > **General Settings** > **Fax Settings** > **Report Settings**

Item	Description
Fax Log Auto Print	Prints the fax log automatically. Select **On(Every 30)** to print a log every time 30 fax jobs are completed. Select **On(Time)** to print the log at a specified time. However, if the number of fax jobs exceeds 30, the log is printed before the specified time.
Attach Fax image to report	Prints a **Transmission Report** with an image of the first page of the sent document. Select **On(Large Image)** to print the upper part of the page without reducing. Select **On(Small Image)** to print the entire page reducing it to fit onto the report.
Report Format	Selects a format for fax reports in **Fax** > **More** tab > **Fax Report** other than **Protocol Trace**. Select **Detail** to print with error codes.

Security Settings Menu

You can find the menu on the printer's control panel below:

Settings > **General Settings** > **Fax Settings** > **Security Settings**

Item	Description
Direct Dialing Restrictions	Selecting **On** disables manual entry of the recipient's fax numbers allowing the operator to select recipients only from the contacts list or sent history. Selecting **Enter Twice** requires the operator to enter the fax number again when the number was manually entered. Selecting **Off** enables manual entry of the recipient's fax numbers.
Confirm Address List	Selecting **On** displays a recipient confirmation screen before starting the transmission.
Backup Data Auto Clear	Selecting **On** automatically erases the backups when sending or receiving a document completes successfully and the backups become unnecessary. Selecting **Off**, to prepare for an unexpected power off due to an electricity failure or an incorrect operation, temporarily stores backup copies of sent and received documents in its memory.
Clear Backup Data	Erases all backup copies temporarily stored in the printer's memory. Run this before you give the printer to someone else or dispose of it.

Printing

Printing from the Printer Driver on Windows

Accessing the Printer Driver

When accessing the printer driver from the computer's control panel, the settings are applied to all of the applications.

Accessing the printer driver from the control panel

❏ Windows 10/Windows Server 2019/Windows Server 2016

Click on the start button, and then select **Windows System** > **Control Panel** > **View devices and printers** in **Hardware and Sound**. Right-click on your printer, or press and hold it and then select **Printing preferences**.

❏ Windows 8.1/Windows 8/Windows Server 2012 R2/Windows Server 2012

Select **Desktop** > **Settings** > **Control Panel** > **View devices and printers** in **Hardware and Sound**. Right-click on your printer, or press and hold it and then select **Printing preferences**.

❏ Windows 7/Windows Server 2008 R2

Click the start button, and select **Control Panel** > **View devices and printers** in **Hardware and Sound**. Right-click on your printer and select **Printing preferences**.

❏ Windows Vista/Windows Server 2008

Click the start button, and select **Control Panel** > **Printers** in **Hardware and Sound**. Right-click on your printer and select **Printing preferences**.

❏ Windows XP/Windows Server 2003 R2/Windows Server 2003

Click the start button, and select **Control Panel** > **Printers and Other Hardware** > **Printers and Faxes**. Right-click on your printer and select **Printing preferences**.

Accessing the printer driver from the printer icon on the task bar

The printer icon on the desktop task bar is a shortcut icon allowing you to quickly access the printer driver.

If you click the printer icon and select **Printer Settings**, you can access the same printer settings window as the one displayed from the control panel. If you double-click this icon, you can check the status of the printer.

Note:
If the printer icon is not displayed on the task bar, access the printer driver window, click ***Monitoring Preferences*** *on the* ***Maintenance*** *tab, and then select* ***Register the shortcut icon to the taskbar****.*

Printing Basics

Note:
Operations may differ depending on the application. See the application's help for details.

1. Open the file you want to print.

   Load paper in the printer if it has not already been loaded.

2. Select **Print** or **Page Setup** from the **File** menu.

3. Select your printer.

4. Select **Preferences** or **Properties** to access the printer driver window.

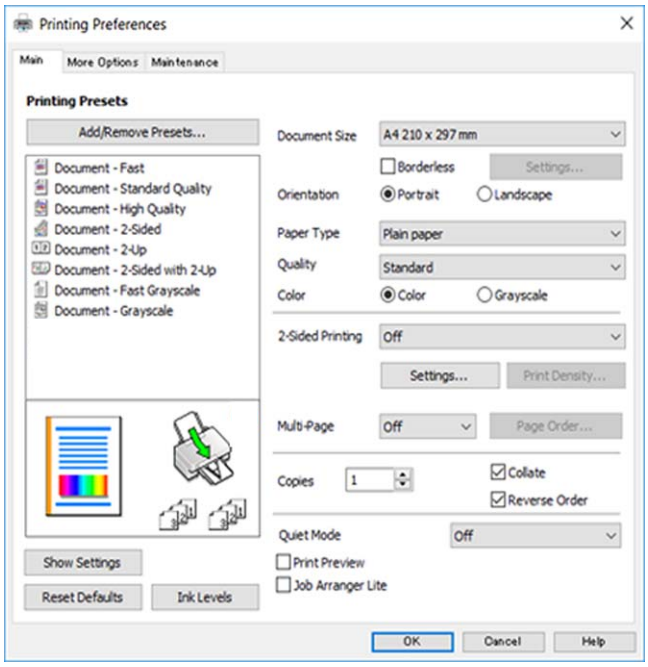

5. Change the settings as necessary.

   See the menu options for the printer driver for details.

   Note:
   ❏ *You can also see the online help for explanations of the setting items. Right-clicking an item displays* ***Help****.*

   ❏ *When you select* ***Print Preview****, you can see a preview of your document before printing.*

6. Click **OK** to close the printer driver window.

7. Click **Print**.

   Note:
   When you select ***Print Preview****, a preview window is displayed. To change the settings, click* ***Cancel****, and then repeat the procedure from step 2.*

Related Information

➡ "Available Paper and Capacities" on page 54
➡ "Loading Paper in the Rear Paper Feed" on page 57
➡ "List of Paper Type" on page 60
➡ "Main Tab" on page 106

Printing on 2-Sides

You can print on both sides of the paper. You can also print a booklet that can be created by re-ordering the pages and folding the printout.

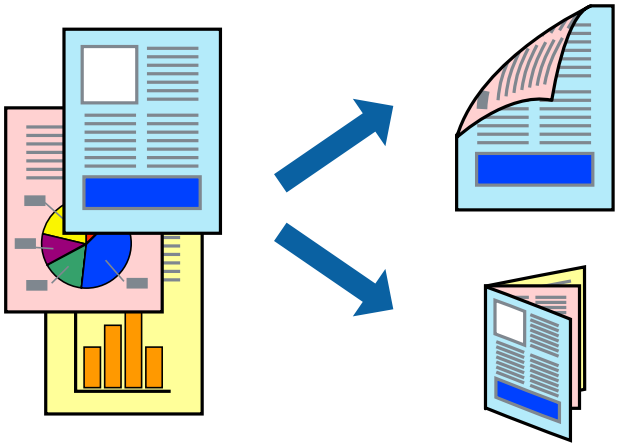

Note:

- ❏ *This feature is not available for borderless printing.*
- ❏ *You can use automatic and manual 2-sided printing. During manual 2-sided printing, flip the paper over to print on the other side when the printer has finished printing the first side.*
- ❏ *If you do not use paper that is suitable for 2-sided printing, the print quality may decline and paper jams may occur.*
- ❏ *Depending on the paper and the data, ink may bleed through to the other side of the paper.*

Related Information

➡ "Available Paper and Capacities" on page 54

Print Settings

Manual 2-sided printing is available when EPSON Status Monitor 3 is enabled. However, it may not be available when the printer is accessed over a network or is used as a shared printer.

Note:
*To enable EPSON Status Monitor 3, click **Extended Settings** on the **Maintenance** tab, and then select **Enable EPSON Status Monitor 3**.*

1. On the printer driver's **Main** tab, select an option from **2-Sided Printing**.
2. Click **Settings**, make the appropriate settings, and then click **OK**.

   Make settings for **Print Density** if necessary. This setting is not available when you select manual 2-sided printing.

   Note:
   - ❏ *To print a folded booklet, select **Booklet**.*
   - ❏ *When setting **Print Density**, you can adjust print density according to the document type.*
   - ❏ *Printing may be slow depending on the combination of options selected for **Select Document Type** in the Print Density Adjustment window and for **Quality** on the **Main** tab.*

3. Click **Print**.

   For manual 2-sided printing, when the first side has finished printing, a pop-up window is displayed on the computer. Follow the on-screen instructions.

Related Information

➡ "Printing Basics" on page 90
➡ "Main Tab" on page 106

Printing Several Pages on One Sheet

You can print two or four pages of data on a single sheet of paper.

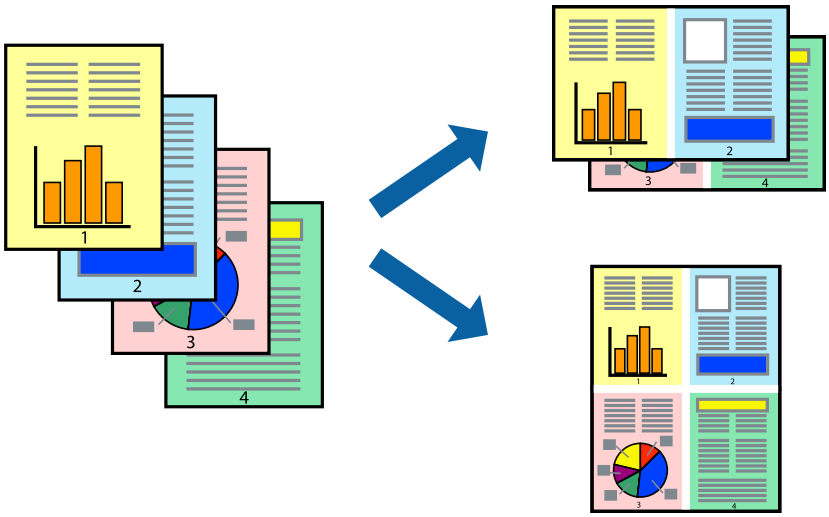

Print Settings

On the printer driver's **Main** tab, select **2-Up** or **4-Up** as the **Multi-Page** setting.

Note:
This feature is not available for borderless printing.

Related Information

➡ "Printing Basics" on page 90
➡ "Main Tab" on page 106

Printing and Stacking in Page Order (Reverse Order Printing)

You can print from the last page so that the documents are stacked in page order.

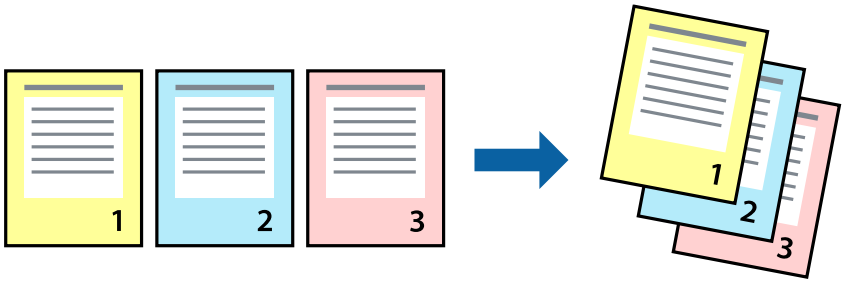

Print Settings

On the printer driver's **Main** tab, select **Reverse Order**.

Related Information

➡ "Printing Basics" on page 90
➡ "Main Tab" on page 106

Printing a Reduced or Enlarged Document

You can reduce or enlarge the size of a document by a specific percentage or to fit the paper size you loaded in the printer.

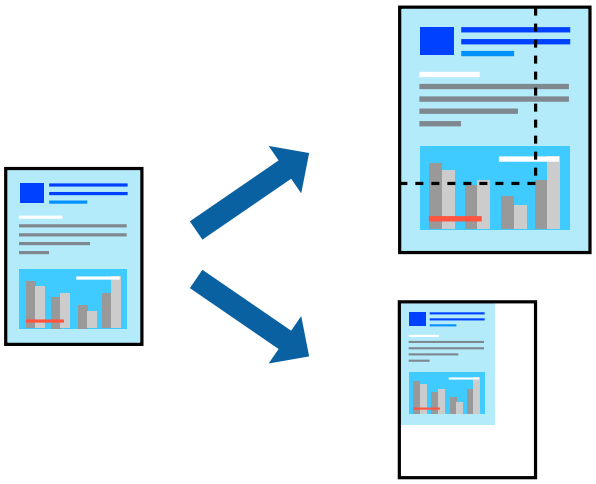

Print Settings

On the printer driver's **More Options** tab, select the document size from the **Document Size** setting. Select the paper size you want to print on from the **Output Paper** setting. Select **Reduce/Enlarge Document**, and then select **Fit to Page** or **Zoom to**. When you select **Zoom to**, enter a percentage.

Select **Center** to print the images in the center of the page.

Note:
This feature is not available for borderless printing.

Related Information

➡ "Printing Basics" on page 90
➡ "More Options Tab" on page 107

Printing One Image on Multiple Sheets for Enlargement (Creating a Poster)

This feature allows you to print one image on multiple sheets of paper. You can create a larger poster by taping them together.

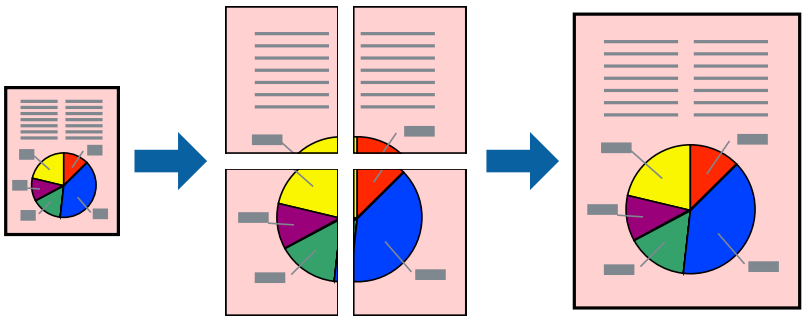

Note:
This feature is not available for borderless printing.

Print Settings

On the printer driver's **Main** tab, select **2x1 Poster**, **2x2 Poster**, **3x3 Poster**, or **4x4 Poster** as the **Multi-Page** setting. If you click **Settings**, you can select the panels that you do not want to print. You can also select the cutting guide options.

Related Information

➡ "Printing Basics" on page 90
➡ "Main Tab" on page 106

Making Posters Using Overlapping Alignment Marks

Here is an example of how to make a poster when **2x2 Poster** is selected, and **Overlapping Alignment Marks** is selected in **Print Cutting Guides**.

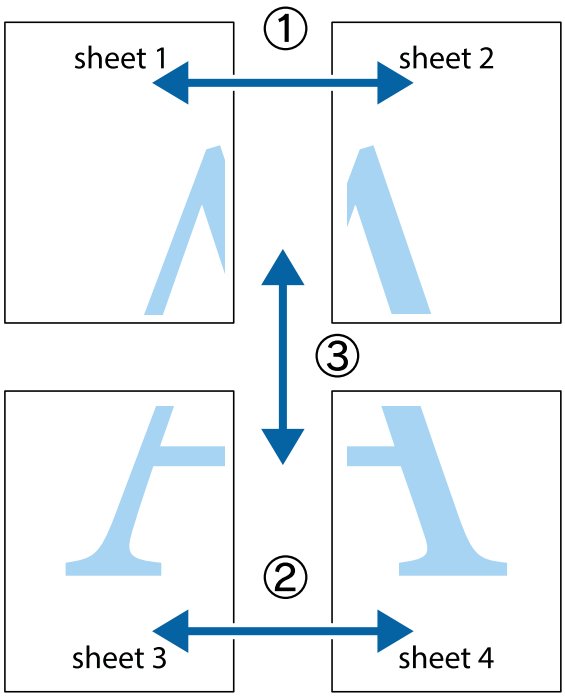

1. Prepare Sheet 1 and Sheet 2. Cut off the margins of Sheet 1 along the vertical blue line through the center of the top and bottom cross marks.

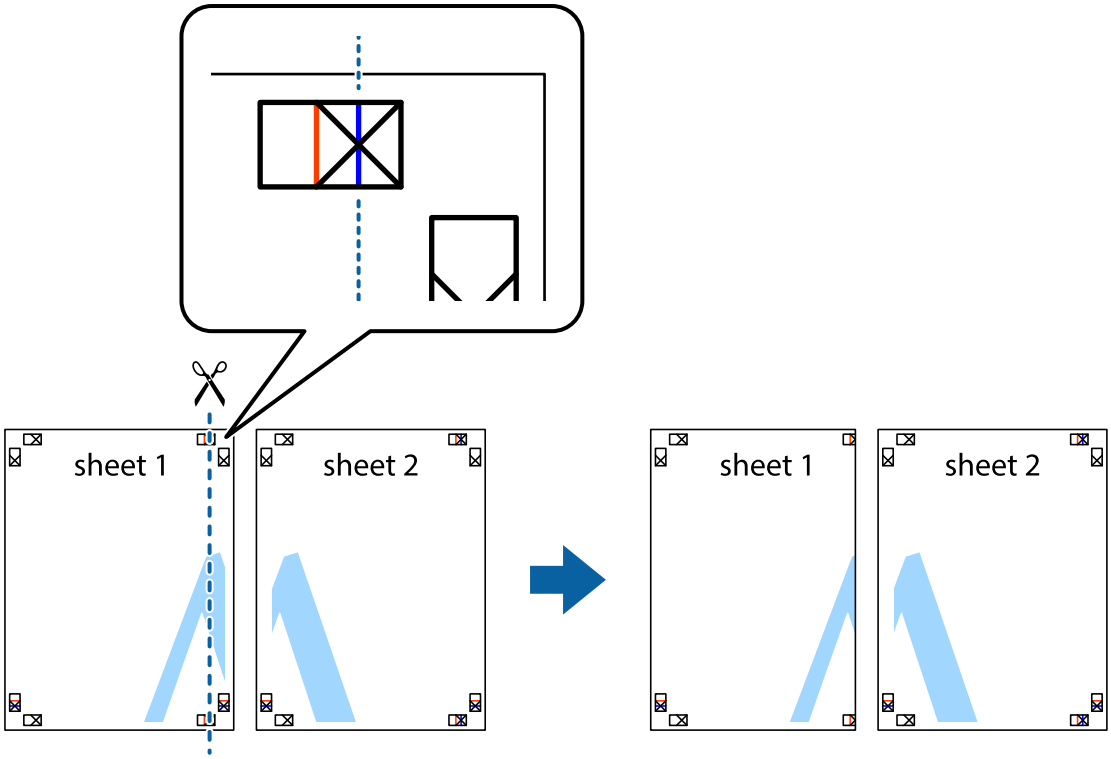

2. Place the edge of Sheet 1 on top of Sheet 2 and align the cross marks, then temporarily tape the two sheets together from the back.

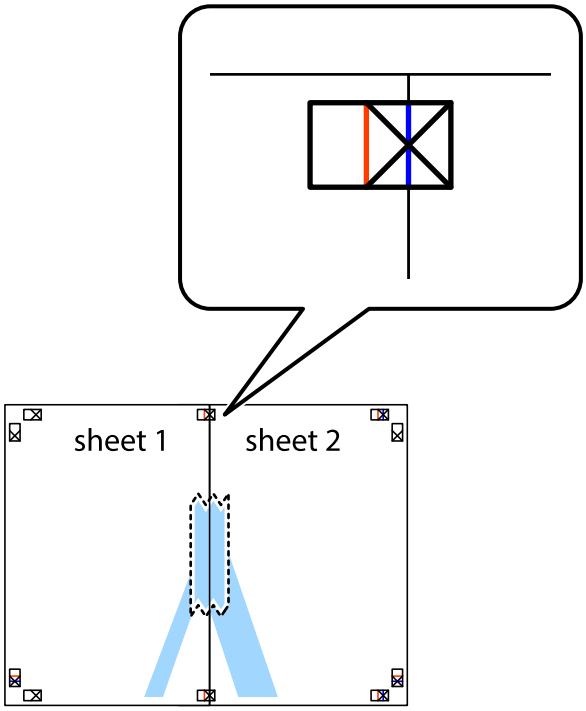

3. Cut the taped sheets in two along the vertical red line through the alignment markers (this time, the line to the left of the cross marks).

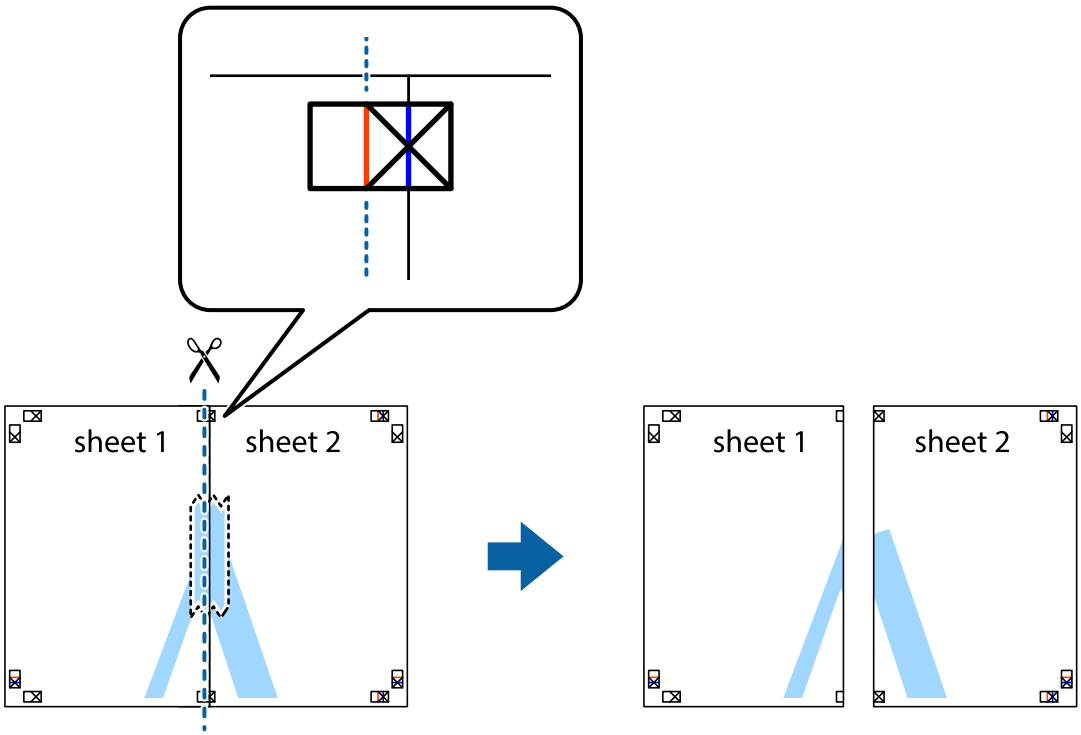

4. Tape the sheets together from the back.

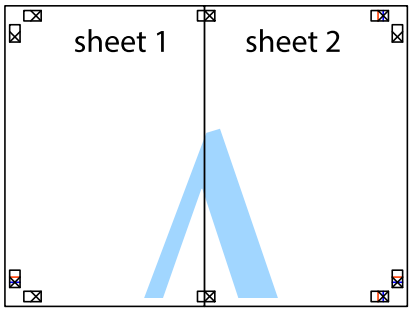

5. Repeat steps 1 to 4 to tape Sheet 3 and Sheet 4 together.

6. Cut off the margins of Sheet 1 and Sheet 2 along the horizontal blue line through the center of the left and right side cross marks.

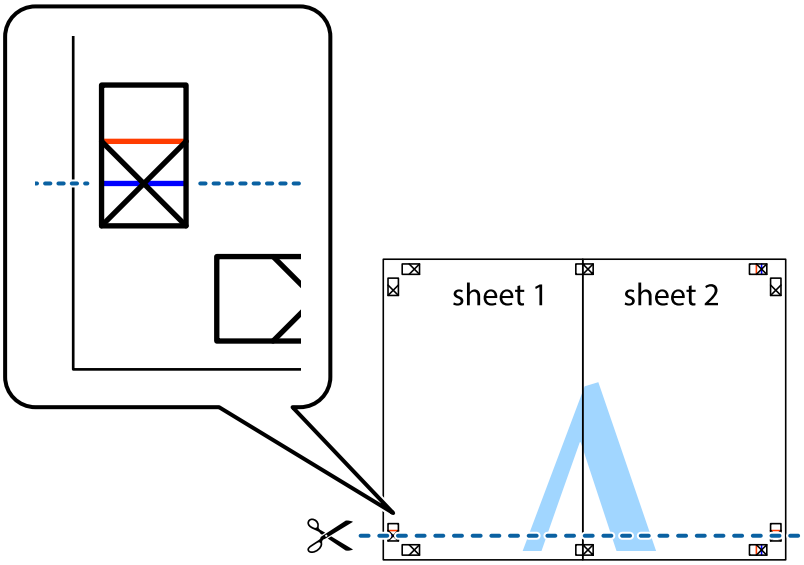

7. Place the edge of Sheet 1 and Sheet 2 on top of Sheet 3 and Sheet 4 and align the cross marks, and then temporarily tape them together from the back.

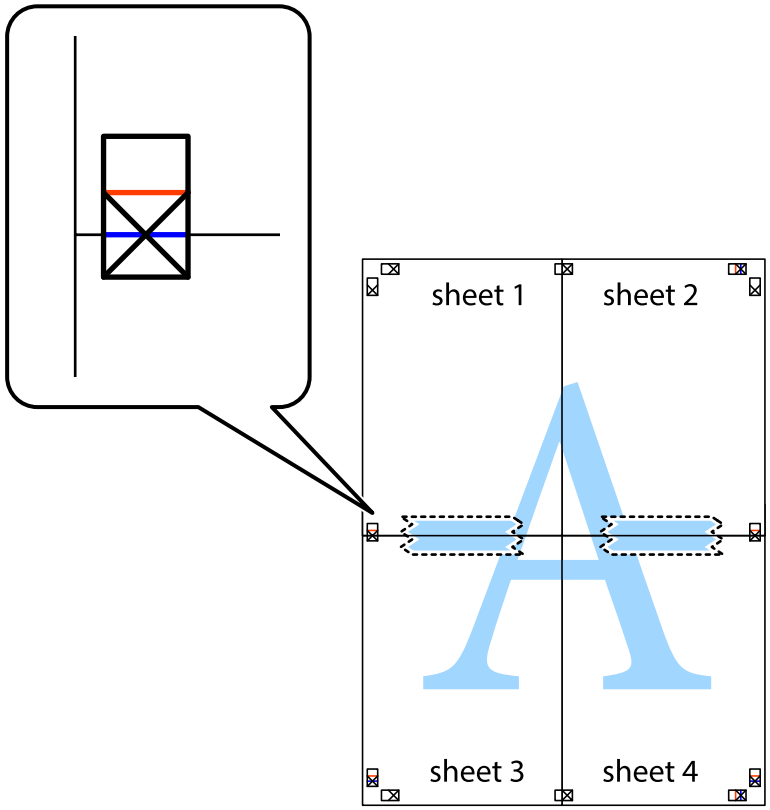

8. Cut the taped sheets in two along the horizontal red line through the alignment markers (this time, the line above the cross marks).

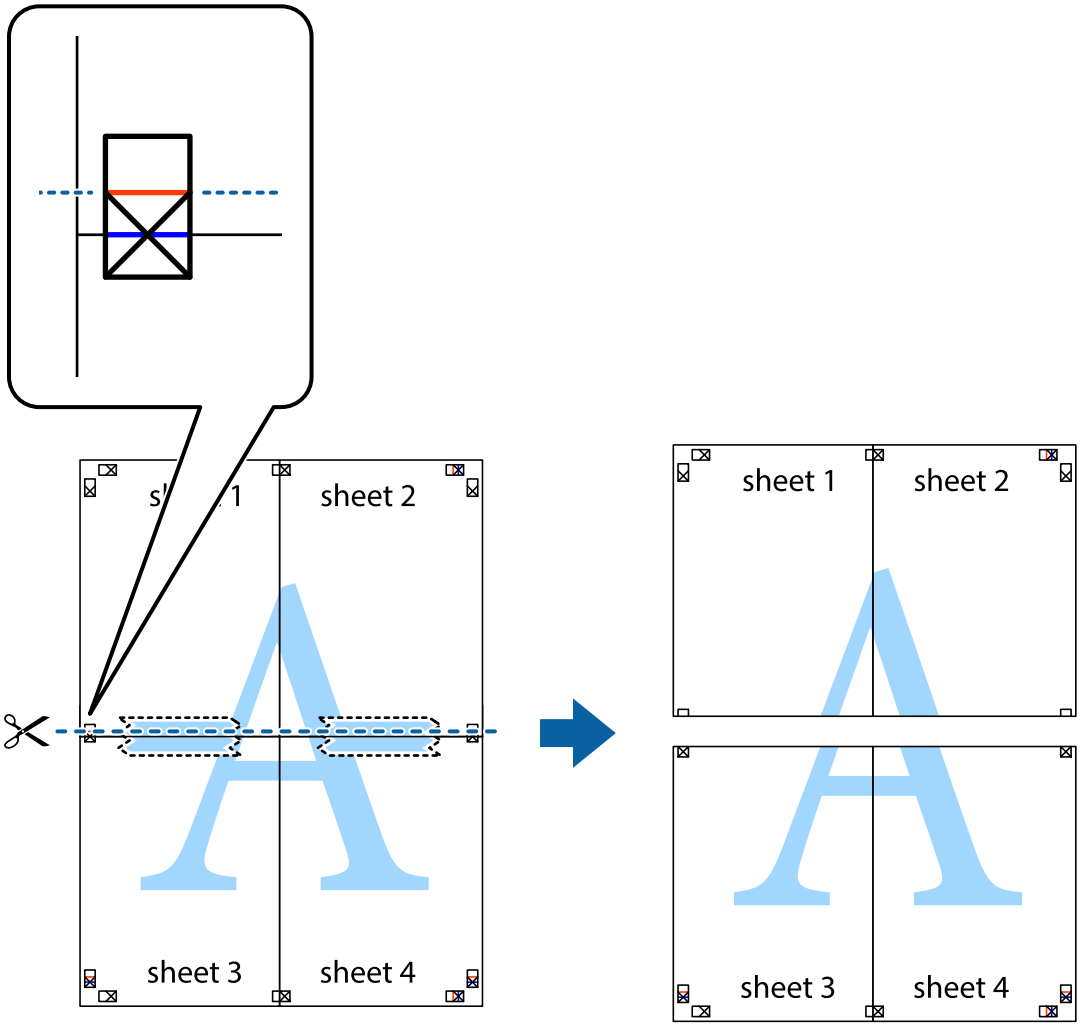

9. Tape the sheets together from the back.

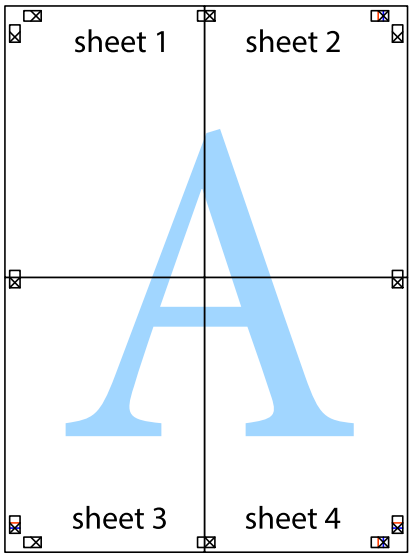

10. Cut off the remaining margins along the outer guide.

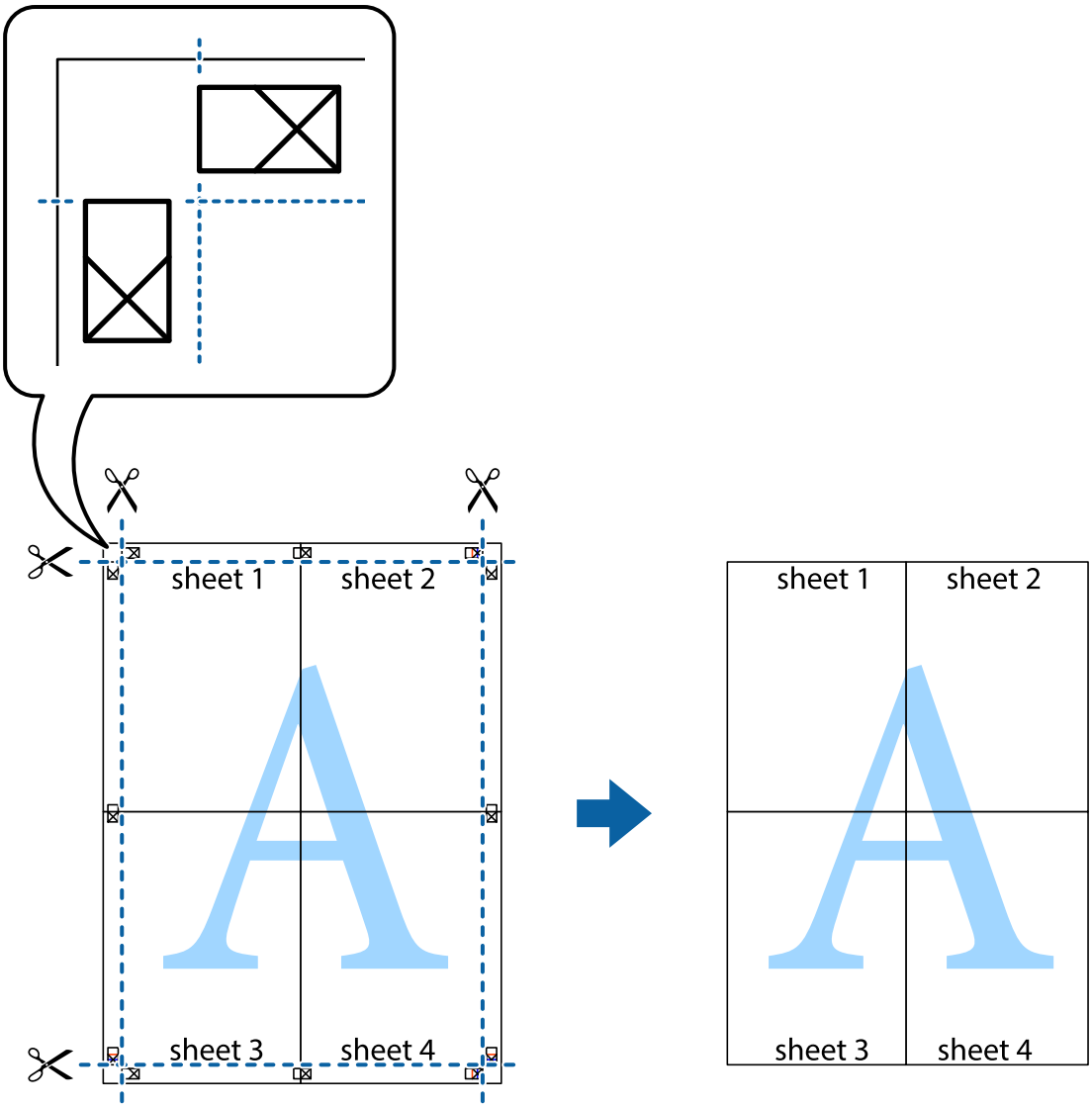

Printing with a Header and Footer

You can print information such as a user name and printing date in headers or footers.

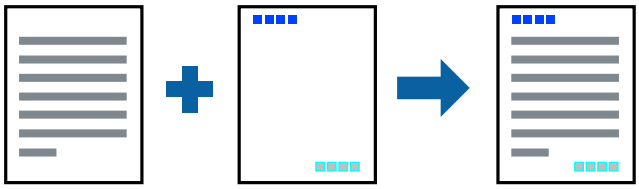

Print Settings

On the printer driver's **More Options** tab, click **Watermark Features**, and then select **Header/Footer**. Click **Settings**, and then select the items you want to print.

Related Information

➡ "Printing Basics" on page 90
➡ "More Options Tab" on page 107

Printing an Anti-Copy Pattern

You can print an anti-copy pattern on your printouts. When printing, the letters themselves are not printed and the entire print is screen-toned lightly. The hidden letters appear when photocopied to easily distinguish the original from the copies.



Anti-Copy Pattern is available under the following conditions:

- ❏ Paper: Plain paper, Copy paper
- ❏ Borderless: Not selected
- ❏ Quality: Standard
- ❏ Automatic 2-sided printing: Not selected
- ❏ Color Correction: Automatic

Note:
You can also add your own anti-copy pattern.

Print Settings

On the printer driver's **More Options** tab, click **Watermark Features**, and then select Anti-Copy Pattern. Click **Settings** to change details such as the size or density of the pattern.

Related Information

➡ "Printing Basics" on page 90
➡ "More Options Tab" on page 107

Printing Multiple Files Together

Job Arranger Lite allows you to combine several files created by different applications and print them as a single print job. You can specify the print settings for combined files, such as multi-page layout, and 2-sided printing.

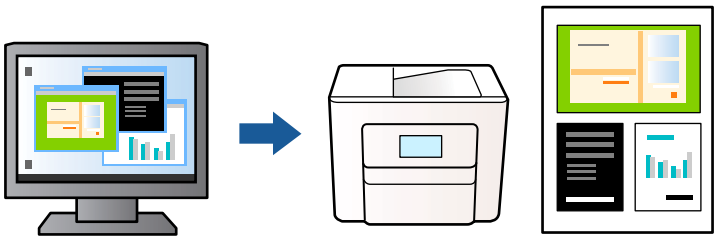

Print Settings

On the printer driver's **Main** tab, select **Job Arranger Lite**. When you start printing, the Job Arranger Lite window is displayed. With the Job Arranger Lite window opened, open the file that you want to combine with the current file, and then repeat the above steps.

When you select a print job added to Print Project in the Job Arranger Lite window, you can edit the page layout.

Click **Print** from the **File** menu to start printing.

Note:
*If you close the Job Arranger Lite window before adding all the print data to the Print Project, the print job you are currently working on is canceled. Click **Save** from the **File** menu to save the current job. The extension of the saved files is "ecl".*

*To open a Print Project, click **Job Arranger Lite** on the printer driver's **Maintenance** tab to open the Job Arranger Lite window. Next, select **Open** from the **File** menu to select the file.*

Related Information

➡ "Printing Basics" on page 90

➡ "Main Tab" on page 106

Printing Using the Color Universal Print Feature

You can enhance the visibility of texts and images in printouts.

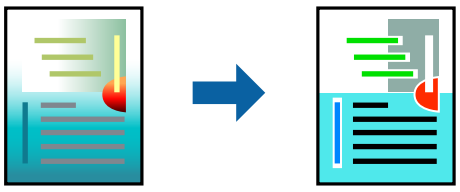

Color Universal Print is only available when the following settings are selected.

❏ Paper Type: Plain paper

❏ Quality: **Standard** or a higher quality

❏ Print Color: **Color**

❏ Applications: Microsoft® Office 2007 or later

❏ Text Size: 96 pts or smaller

Print Settings

On the printer driver's **More Options** tab, click **Image Options** in the **Color Correction** setting. Select an option from the **Color Universal Print** setting. Click **Enhancement Options** to make further settings.

Note:

- ❏ *Certain characters may be altered by patterns, such as "+" appearing as "±".*
- ❏ *Application-specific patterns and underlines may alter content printed using these settings.*
- ❏ *Print quality may decrease in photos and other images when using Color Universal Print settings.*
- ❏ *Printing is slower when using Color Universal Print settings.*

Related Information

- ➡ "Printing Basics" on page 90
- ➡ "More Options Tab" on page 107

Adjusting the Print Color

You can adjust the colors used in the print job. These adjustments are not applied to the original data.

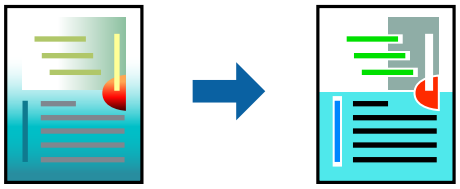

Print Settings

On the printer driver's **More Options** tab, select **Custom** as the **Color Correction** setting. Click **Advanced** to open the **Color Correction** window, and then select the method of color correction.

Note:

- ❏ ***Automatic*** *is selected as default on the* ***More Options*** *tab. With this setting, the colors are automatically adjusted to match the paper type and print quality settings.*
- ❏ ***PhotoEnhance*** *on the* ***Color Correction*** *window adjusts the color by analyzing the location of the subject. Therefore, if you have changed the location of the subject by reducing, enlarging, cropping, or rotating the image, the color may change unexpectedly. Selecting the borderless setting also changes the location of the subject resulting in changes in color. If the image is out of focus, the tone may be unnatural. If the color is changed or becomes unnatural, print in a mode other than* ***PhotoEnhance****.*

Related Information

- ➡ "Printing Basics" on page 90
- ➡ "More Options Tab" on page 107

Printing to Emphasize Thin Lines

You can thicken thin lines that are too thin to print.

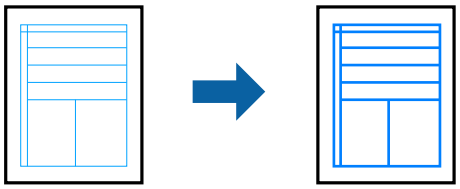

Print Settings

On the printer driver's **More Options** tab, click **Image Options** in the **Color Correction** setting. Select **Emphasize Thin Lines**.

Related Information

➡ "Printing Basics" on page 90

➡ "More Options Tab" on page 107

Printing Clear Bar Codes

You can print a bar code clearly and make it easy to scan. Only enable this feature if the bar code you printed cannot be scanned.

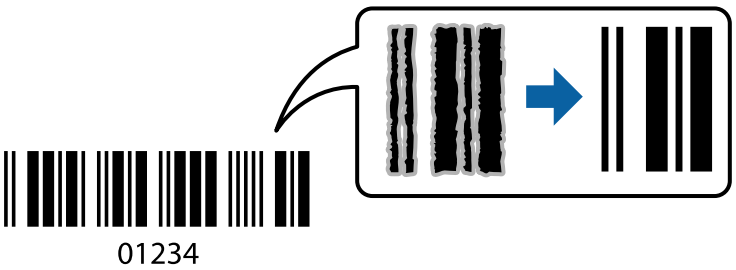

You can use this feature under the following conditions.

❏ Paper: Plain paper, Copy paper, Letterhead, or Envelope

❏ Quality: **Standard**

The print quality may be changed when printing. The print speed may become slower and print density may become higher.

Note:
Deblurring may not always be possible depending on the circumstances.

Print Settings

On the printer driver's **Maintenance** tab, click **Extended Settings**, and then select **Barcode mode**.

Related Information

➡ "Printing Basics" on page 90
➡ "Maintenance Tab" on page 108

Canceling Printing

You can cancel a print job from the computer. However, you cannot cancel a print job from the computer once it has been completely sent to the printer. In this case, cancel the print job by using the printer's control panel.

Canceling

On your computer, right-click on your printer in **Devices and Printers**, **Printer**, or in **Printers and Faxes**. Click **See what's printing**, right-click on the job you want to cancel, and then select **Cancel**.

Menu Options for the Printer Driver

Open the print window in an application, select the printer, and then access the printer driver window.

Note:
Menus vary depending on the option you selected.

Main Tab

Printing Presets	Add/Remove Presets	You can add or remove your own presets for frequently used print settings. Select the preset you want to use from the list.
Show Settings	Displays a list of items currently set on the **Main** and **More Options** tabs.	
Reset Defaults	Return all settings to their factory default values. The settings on the **More Options** tab are also reset to their defaults.	
Ink Levels	Displays the approximate ink levels.	
Paper Source	Select the paper source from which the paper is fed. Select **Auto Select** to automatically select the paper source selected in the print settings on the printer's control panel. If the printer has only one paper source, this item is not displayed.	
Document Size	Select the paper size on which you want to print. If you select **User-Defined**, enter the paper width and height.	
Borderless	Enlarges the print data slightly more than the paper size so that no margins are printed around the edges of the paper. Click **Settings** to select the amount of enlargement.	
Orientation	Select the orientation you want to use to print.	
Paper Type	Select the type of paper on which you print.	
Quality	Select the pint quality you want to use for printing. Available settings depend on the paper type you select. Click **More Settings** to make further settings.	
Color	Select the color for your print job.	

2-Sided Printing	Allows you to perform 2-sided printing.	
	Settings	You can specify the binding edge and the binding margins. When printing multi-page documents, you can select to print starting from either the front or the back side of the page.
	Print Density	Select the document type to adjust the print density. If the appropriate print density is selected, you can prevent images from bleeding through to the reverse side. Select **User Defined** to adjust the print density manually.
Multi-Page	Allows you to print several pages on one sheet or perform poster printing. Click **Page Order** to specify the order in which pages are printed.	
Copies	Set the number of copies you want to print.	
	Collate	Prints multi-page documents collated in order and sorted into sets.
	Reverse Order	Allows you to print from the last page so that the pages are stacked in the correct order after printing.
Quiet Mode	Reduces the noise the printer makes. However, enabling this may reduce print speed.	
Print Preview	Displays a preview of your document before printing.	
Job Arranger Lite	Select to print using the Job Arranger Lite feature.	

More Options Tab

Printing Presets	Add/Remove Presets	You can add or remove your own presets for frequently used print settings. Select the preset you want to use from the list.
Show Settings	Displays a list of items currently set on the **Main** and **More Options** tabs.	
Reset Defaults	Return all settings to their factory default values. The settings on the **Main** tab are also reset to their defaults.	
Document Size	Select the size of your document.	
Output Paper	Select the paper size on which you want to print. If the **Output Paper** differs from the **Document Size**, **Reduce/Enlarge Document** is selected automatically. You do not have to select it when printing without reducing or enlarging the size of a document.	
Reduce/Enlarge Document	Allows you to reduce or enlarge the size of a document.	
	Fit to Page	Automatically reduce or enlarge the document to fit to the paper size selected in **Output Paper**.
	Zoom to	Prints with a specific percentage.
	Center	Prints images in the center of the paper.
Color Correction	Automatic	Adjusts the colors of images automatically.
	Custom	Allows you to perform manual color correction. Click **Advanced** for further settings.
	Image Options	Enables print quality options such as Color Universal Print or Fix Red-Eye. You can also thicken thin lines to make them visible on the printouts.

Watermark Features	Allows you to make settings for anti-copy pattern or watermarks.	
Additional Settings	Rotate 180°	Rotates pages 180 degrees before printing. This feature is helpful when printing on paper such as envelopes that are loaded in fixed direction in the printer.
	High Speed	Prints when the print head moves in both directions. The print speed is faster, but the quality may decline.
	Mirror Image	Inverts an image to print as it would appear in a mirror.

Maintenance Tab

Nozzle Check	Prints a nozzle check pattern to check if the print head nozzles are clogged.
Head Cleaning	Cleans the clogged nozzles in the print head. Because this feature uses some ink, clean the print head only if the nozzles are clogged.
Job Arranger Lite	Opens the Job Arranger Lite window. You can save and edit data.
EPSON Status Monitor 3	Opens the EPSON Status Monitor 3 window. Here you can confirm the status of the printer and the consumables.
Monitoring Preferences	Allows you to make settings for items on the EPSON Status Monitor 3 window.
Extended Settings	Allows you to make a variety of settings. Right-click each item to view the Help for more details.
Print Queue	Displays the jobs waiting to be printed. You can check, pause, or resume print jobs.
Language	Changes the language to be used on the printer driver window. To apply the settings, close the printer driver, and then open it again.
Software Update	Starts EPSON Software Updater to check for the latest version of applications on the Internet.
Online Order	Allows you to access the site where you can purchase Epson's ink cartridges.
Technical Support	Allows you to access the Epson technical support website.

Printing from the Printer Driver on Mac OS

Printing Basics

Note:
Operations differ depending on the application. See the application's help for details.

1. Open the file you want to print.

   Load paper in the printer if it has not already been loaded.

2. Select **Print** from the **File** menu or another command to access the print dialog.

   If necessary, click **Show Details** or▼ to expand the print window.

3. Select your printer.

4. Select **Print Settings** from the pop-up menu.

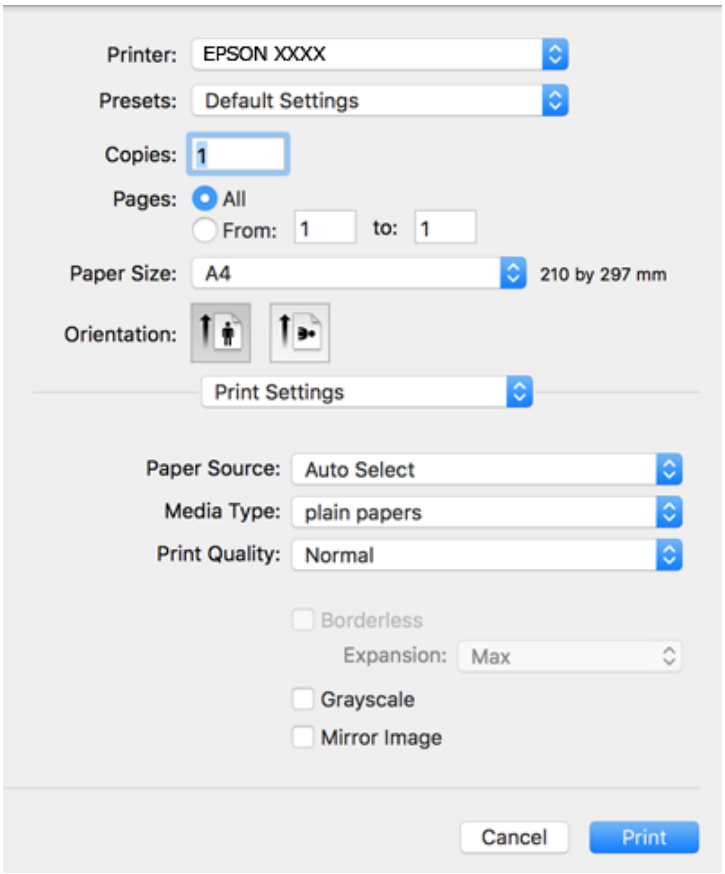

Note:
*If the **Print Settings** menu is not displayed on macOS Catalina (10.15) or later, macOS High Sierra (10.13), macOS Sierra (10.12), OS X El Capitan (10.11), OS X Yosemite (10.10), OS X Mavericks (10.9), OS X Mountain Lion (10.8), the Epson printer driver has not been installed correctly. Enable it from the following menu.*

*Select **System Preferences** from the Apple menu > **Printers & Scanners** (or **Print & Scan**, **Print & Fax**), remove the printer, and then add the printer again.*

*macOS Mojave (10.14) cannot access **Print Settings** in applications made by Apple such as TextEdit.*

5. Change the settings as necessary.

   See the menu options for the printer driver for details.

6. Click **Print**.

Related Information

- "Available Paper and Capacities" on page 54
- "Loading Paper in the Rear Paper Feed" on page 57
- "List of Paper Type" on page 60
- "Menu Options for Print Settings" on page 114
- "Adding the Printer (for Mac OS Only)" on page 185

Printing on 2-Sides

You can print on both sides of the paper.

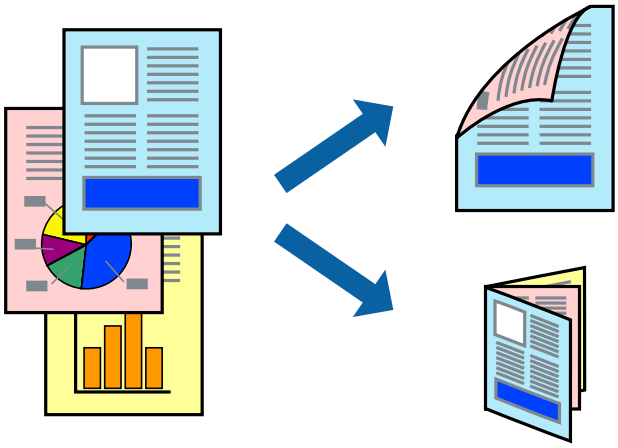

Note:

- ❏ *This feature is not available for borderless printing.*
- ❏ *If you do not use paper that is suitable for 2-sided printing, the print quality may decline and paper jams may occur.*
- ❏ *Depending on the paper and the data, ink may bleed through to the other side of the paper.*

Related Information

➡ "Available Paper and Capacities" on page 54

Print Settings

Select **Two-sided Printing Settings** from the pop-up menu. Select the method of 2-sided printing, and then make the **Document Type** settings.

Note:

- ❏ *Printing speed may be reduced depending on the document type.*
- ❏ *When printing photos with dense data, select **Text & Graphics** or **Text & Photos** in the **Document Type** setting. If the printouts are smeared or ink bleeds through to the other side of the paper, adjust the **Print Density** and **Increased Ink Drying Time** in **Adjustments**.*

Related Information

➡ "Printing Basics" on page 108

➡ "Menu Options for Two-sided Printing Settings" on page 115

Printing Several Pages on One Sheet

You can print two or four pages of data on a single sheet of paper.

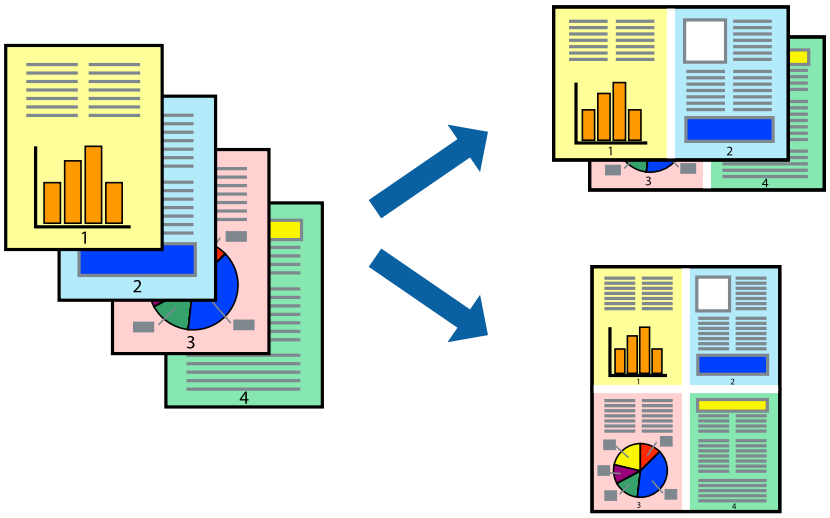

Print Settings

Select **Layout** from the pop-up menu. Set the number of pages in **Pages per Sheet**, the **Layout Direction** (page order), and **Border**.

Related Information

➡ "Printing Basics" on page 108

➡ "Menu Options for Layout" on page 113

Printing and Stacking in Page Order (Reverse Order Printing)

You can print from the last page so that the documents are stacked in page order.

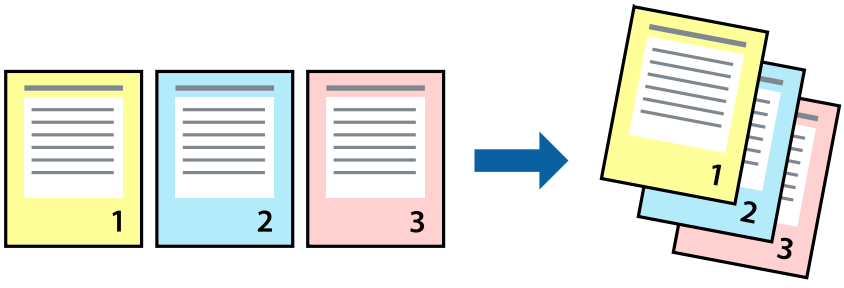

Print Settings

Select **Paper Handling** from the pop-up menu. Select **Reverse** as the **Page Order** setting.

Related Information

➡ "Printing Basics" on page 108

➡ "Menu Options for Paper Handling" on page 114

Printing a Reduced or Enlarged Document

You can reduce or enlarge the size of a document by a specific percentage or to fit the paper size you loaded in the printer.

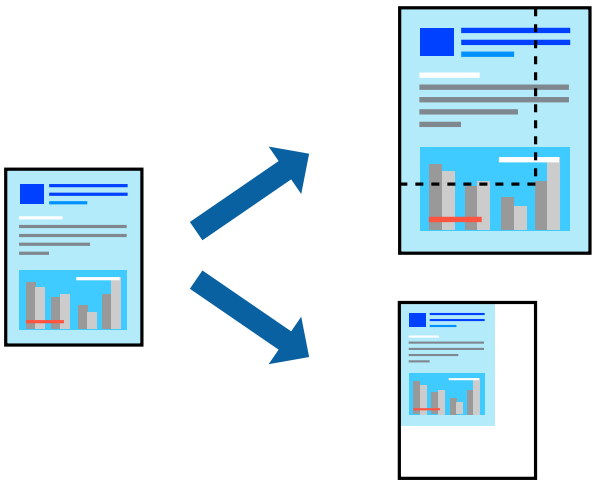

Print Settings

When printing to fit to the paper size, select **Paper Handling** from the pop-up menu, and then select **Scale to fit paper size**. Select the paper size you loaded in the printer in **Destination Paper Size**. When reducing the size of the document, select **Scale down only**.

1. When printing at a specific percentage, do one of the following.
   - ❏ Select **Print** from the **File** menu of the application. Click **Page Setup**, and then select your printer in **Format For**. Select the size of the data to be printed from **Paper Size**, enter a percentage in **Scale**, and then click **OK**.
   - ❏ Select **Page Setup** from the **File** menu of the application. Select your printer in **Format For**. Select the size of the data to be printed from **Paper Size**, enter a percentage in **Scale**, and then click **OK**. Select **Print** from the **File** menu.

   Note:
   Operations differ depending on the application. See the application's help for details.
2. Select your printer in **Printer**.
3. Set the other items as necessary.
4. Click **Print**.

Related Information

➡ "Printing Basics" on page 108
➡ "Menu Options for Paper Handling" on page 114

Adjusting the Print Color

You can adjust the colors used in the print job. These adjustments are not applied to the original data.

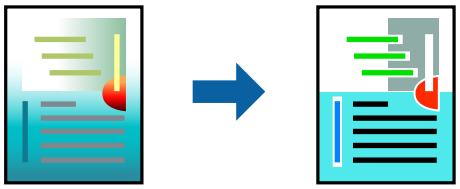

Print Settings

Select **Color Matching** from the pop-up menu, and then select **EPSON Color Controls**. Select **Color Options** from the pop-up menu, and then select one of the available options. Click the arrow next to **Advanced Settings**, and then make more detailed settings.

Related Information

➡ "Printing Basics" on page 108

➡ "Menu Options for Color Matching" on page 114

➡ "Menu Options for Color Options" on page 115

Canceling Printing

You can cancel a print job from the computer. However, you cannot cancel a print job from the computer once it has been completely sent to the printer. In this case, cancel the print job by using the printer's control panel.

Canceling

Click the printer icon in the **Dock**. Select the job you want to cancel, and then do one of the following.

❏ OS X Mountain Lion or later

Click ⊗ next to the progress meter.

❏ Mac OS X v10.6.8 to v10.7.x

Click **Delete**.

Menu Options for the Printer Driver

Open the print window in an application, select the printer, and then access the printer driver window.

Note:
Menus vary depending on the option you selected.

Menu Options for Layout

Pages per Sheet	Select the number of pages to be printed on one sheet.

Layout Direction	Specify the order in which the pages will be printed.
Border	Prints a border around the pages.
Reverse page orientation	Rotates pages 180 degrees before printing. Select this item when printing on paper such as envelopes that are loaded in fixed direction in the printer.
Flip horizontally	Inverts an image to print as it would appear in a mirror.

Menu Options for Color Matching

ColorSync	Select the method for color adjustment. These options adjusts colors between the printer and the computer display to minimize the difference in color.
EPSON Color Controls	

Menu Options for Paper Handling

Collate pages	Prints multi-page documents collated in order and sorted into sets.	
Pages to Print	Select to print only odd pages or even pages.	
Page Order	Select to print from the top or the last page.	
Scale to fit paper size	Prints to fit to the paper size you loaded.	
	Destination Paper Size	Select the paper size to print on.
	Scale down only	Select when reducing the size of the document.

Menu Options for Cover Page

Print Cover Page	Select whether or not to print a cover page. When you want to add a back cover, select **After document**.
Cover Page Type	Select the contents of the cover page.

Menu Options for Print Settings

Paper Source	Select the paper source from which the paper is fed. If the printer has only one paper source, this item is not displayed. Selecting **Auto Select** selects the paper source that matches the paper setting on the printer automatically.	
Media Type	Select the type of paper on which you print.	
Print Quality	Select the pint quality you want to use for printing. The options vary depending on the paper type.	
Borderless	This checkbox is selected when you select a borderless paper size.	
	Expansion	In borderless printing, the print data is enlarged slightly more than the paper size so that no margins are printed around the edges of the paper. Select the amount of enlargement.

Grayscale	Select when you want to print in black or shades of gray.
Mirror Image	Inverts an image to print as it would appear in a mirror.

Menu Options for Color Options

Manual Settings	Adjusts the color manually. In **Advanced Settings**, you can select detailed settings.
PhotoEnhance	Produces sharper images and more vivid colors by automatically adjusting the contrast, saturation, and brightness of the original image data.
Off (No Color Adjustment)	Print without enhancing or adjusting the color in any way.

Menu Options for Two-sided Printing Settings

Two-sided Printing	Prints on both sides of the paper.

Making Operation Settings for the Mac OS Printer Driver

Accessing the Operation Settings Window of the Mac OS Printer Driver

Select **System Preferences** from the Apple menu > **Printers & Scanners** (or **Print & Scan**, **Print & Fax**), and then select the printer. Click **Options & Supplies** > **Options** (or **Driver**).

Operation Settings of the Mac OS Printer Driver

- ❏ Skip Blank Page: Avoids printing blank pages.
- ❏ Quiet Mode: Prints quietly. However, the print speed may be slower.
- ❏ Permit temporary black printing: Prints only with black ink temporarily.
- ❏ High Speed Printing: Prints when the print head moves in both directions. The print speed is faster, but the quality may decline.
- ❏ Output documents for filing: Feed the paper so that it is easy to file when printing landscape data or 2-sided printing. Envelope printing is not supported.
- ❏ Remove white borders: Removes unnecessary margins during borderless printing.
- ❏ Warning Notifications: Allows the printer driver to display warning notifications.
- ❏ Establish bidirectional communication: Usually, this should be set to **On**. Select **Off** when acquiring the printer information is impossible because the printer is shared with Windows computers on a network or for any other reason.

Printing from Smart Devices

Using Epson iPrint

Epson iPrint is an application that allows you to print photos, documents, and web pages from a smart device such as a smartphone or tablet. You can use local print, printing from a smart device that is connected to the same wireless network as your printer, or remote print, printing from a remote location over the Internet. To use remote print, register your printer in the Epson Connect service.

If you start Epson iPrint when the printer is not connected to the network, a message is displayed instructing you to connect to the printer. Follow the instructions to complete the connection. See the URL below for the operating conditions.

http://epson.sn



Related Information

➡ "Printing Using a Network Service" on page 187

Installing Epson iPrint

You can install Epson iPrint on your smart device from the following URL or QR code.

http://ipr.to/c



Printing Using Epson iPrint

Start Epson iPrint from your smart device and select the item you want to use from the home screen.

The following screens are subject to change without notice. The contents may vary depending on the product.

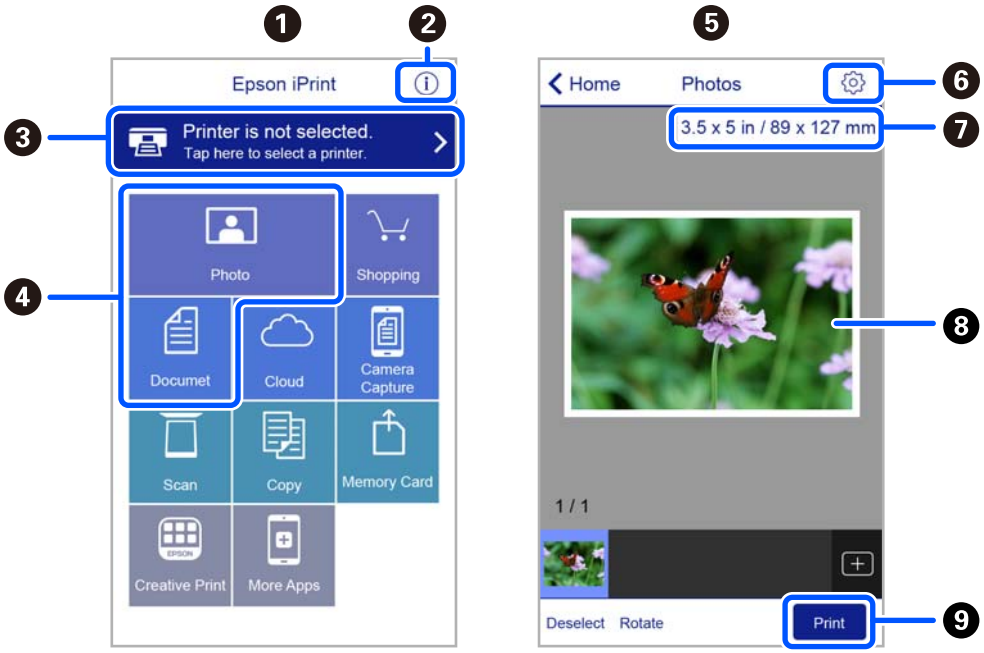

❶	Home screen displayed when the application is started.
❷	Displays information on how to setup the printer and a FAQ.
❸	Displays the screen where you can select the printer and make printer settings. Once you have selected the printer, you do not need to select it again from the next time.
❹	Select what you want to print such as photos and documents.
❺	The print photos screen displayed when the photo menu is selected.
❻	Displays the screen to make print settings such as paper size and paper type.
❼	Displays the paper size. When this is displayed as a button, tap it to display the paper settings currently set on the printer.
❽	Displays photos and documents you selected.
❾	Starts printing.

Note:
To print from the document menu using iPhone, iPad, and iPod touch running iOS, start Epson iPrint after transferring the document you want to print using the file sharing function in iTunes.

Using Epson Print Enabler

You can wirelessly print your documents, emails, photos, and web pages right from your Android phone or tablet (Android v4.4 or later). With a few taps, your Android device will discover an Epson printer that is connected to the same wireless network.

Note:
Operations may differ depending on the device.

1. Load paper in the printer.
2. Set up your printer for wireless printing.
3. On your Android device, install the Epson Print Enabler plug-in from Google Play.
4. Connect your Android device to the same wireless network as your printer.
5. Go to **Settings** on your Android device, select **Connected devices** > **Printing**, and then enable Epson Print Enabler.
6. From an Android application such as Chrome, tap the menu icon and print whatever is on the screen.

   Note:
   *If you do not see your printer, tap **All Printers** and select your printer.*

Related Information

➡ "Loading Paper in the Rear Paper Feed" on page 57
➡ "Connecting to a Smart Device" on page 25

Using AirPrint

AirPrint enables instant wireless printing from iPhone, iPad, iPod touch, and Mac without the need to install drivers or download software.

Works with Apple AirPrint

Note:
If you disabled paper configuration messages on your product control panel, you cannot use AirPrint. See the link below to enable the messages, if necessary.

1. Load paper in your product.
2. Set up your product for wireless printing. See the link below.

   http://epson.sn
3. Connect your Apple device to the same wireless network that your product is using.
4. Print from your device to your product.

   Note:
   For details, see the AirPrint page on the Apple website.

Related Information

➡ "Printer Settings" on page 68

Canceling the Ongoing Job

Press the ⊘ button on the printer's control panel to cancel the print job in progress.

Copying

Copying Basics

This section explains the steps for basic copying.

1. Place the originals.

   If you want to copy multiple originals, place all of the originals on the ADF.

2. Select **Copy** on the home screen.

   To select an item, use the ▲▼◀▶ buttons, and then press the OK button.

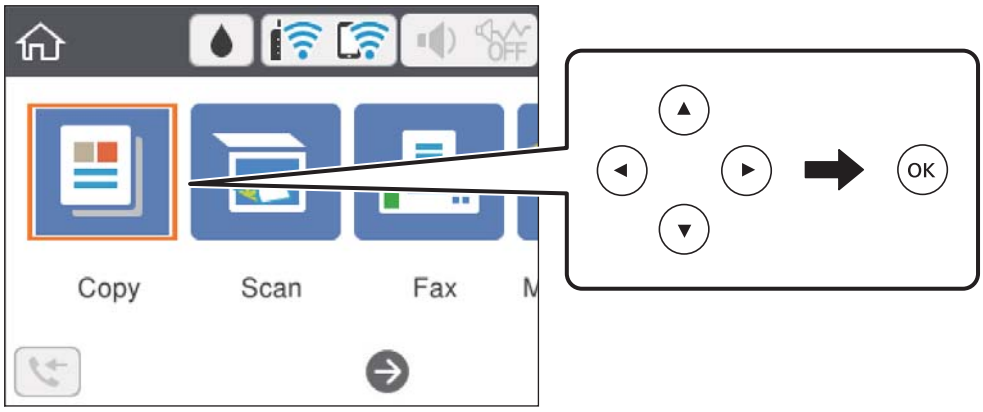

3. Check the settings on the **Copy** tab.

   Select the setting item to change it as necessary.

   Note:

   ❏ *If you select **Advanced Settings** tab, you can make settings such as **Multi-Page** or **Quality**.*

   ❏ *If the combination of settings you require is not available, ⚠ is displayed. Select the setting item to check the details, and then change the settings.*

4. Enter the number of copies.

5. Press the ◇ button.

Related Information

➡ "Loading Papers" on page 54
➡ "Placing Originals" on page 60
➡ "Basic Menu Options for Copying" on page 121
➡ "Advanced Menu Options for Copying" on page 122

Copying on 2-Sides

You can copy multiple originals on both sides of the paper.

1. Select **Copy** on the home screen.

   To select an item, use the ▲▼◀▶ buttons, and then press the OK button.

2. Select **Copy** tab > , and then select **1→2-Sided**.

   You can also specify the orientation of the original and the binding position of the copy result.

3. Press the ⓘ button.

Related Information

➡ "Copying Basics" on page 120

Copying Multiple Originals onto One Sheet

You can copy two originals onto a single sheet of paper.

1. Select **Copy** on the home screen.

   To select an item, use the ▲▼◀▶ buttons, and then press the OK button.

2. Select **Advanced Settings** tab > **Multi-Page**, and select **2-up**.

   You can also specify the layout order and orientation of the original.

3. Select **Copy** tab, and then press the ⓘ button.

Related Information

➡ "Copying Basics" on page 120

Basic Menu Options for Copying

Note:
The items may not be available depending on other settings you made.

B&W:

Copies the original in black and white (monochrome).

Color:

Copies the original in color.

(2-Sided) :

Select 2-sided layout.

❏ 1→1-Sided

Copies one side of an original onto a single side of paper.

❏ 1→2-Sided

Copies two single-sided originals onto both sides of a single sheet of paper. Select the orientation of your original and the binding position of the paper.

(Density) :

Increase the level of density when the copying results are faint. Decrease the level of density when ink smears.

Advanced Menu Options for Copying

Note:
The items may not be available depending on other settings you made.

Paper Setting:

Set the size and type of the paper you loaded in the printer.

Reduce/Enlarge:

Configures the magnification ratio of the enlargement or reduction. If you want to reduce or enlarge the original by a specific percentage, select the value, and then enter a percentage within a range of 25 to 400%.

❏ Actual Size

Copies at 100 % magnification.

❏ A4→A5 and others

Automatically enlarges or reduces the original to fit to a specific paper size.

❏ Auto Fit Page

Detects the scan area and automatically enlarges or reduces the original to fit to the paper size you selected. When there are white margins around the original, the white margins from the corner mark of the scanner glass are detected as the scan area, but the margins at the opposite side may be cropped.

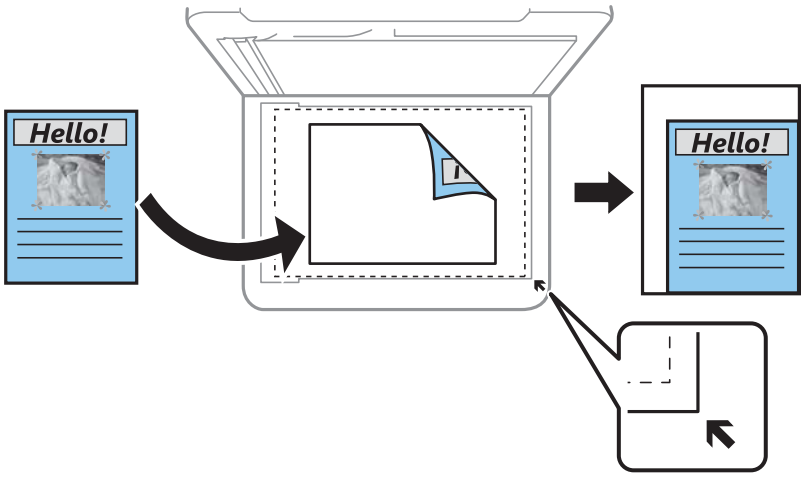

Original Size:

Select the size of your original. When copying non-standard size originals, select the size closest to your original.

Multi-Page:

❏ Single Page

Copies a single-sided original onto a single sheet.

❏ 2-up

Copies two single-sided originals onto a single sheet in 2-up layout. Select the layout order and the orientation of your original.

Quality:

Select the print quality. **Best** provides higher quality printing, but the printing speed may be slower.

Original Orientation:

Select the orientation of your original.

ID Card Copy:

Scans both sides of an ID card and copies onto one side of A4 size paper.

Borderless Copy:

Copies without margins around the edges. The image is enlarged a little to remove margins from the edges of the paper. Select how much to enlarge in the **Expansion** setting.

Clear All Settings:

Resets the copy settings to their defaults.

Scanning

Scanning Using the Control Panel

You can send scanned images from the printer's control panel to the following destinations.

Computer

You can save the scanned image to a computer connected to the printer. Before scanning, install Epson Scan 2 and Epson Event Manager on your computer.

Cloud

You can send scanned images to cloud services. Before scanning, make settings on the Epson Connect.

WSD

You can save the scanned image to a computer connected to the printer, using WSD feature. If you are using the Windows 7/Windows Vista, you need to make WSD settings on your computer before scanning.

Related Information

- "Scanning to a Computer (Event Manager)" on page 124
- "Scanning to the Cloud" on page 128
- "Scanning Using WSD" on page 130

Scanning to a Computer (Event Manager)

Note:
Before scanning, install Epson Scan 2 and Epson Event Manager on your computer.

1. Place the originals.
2. Select **Scan** on the home screen.

   To select an item, use the ▲▼◀▶ buttons, and then press the OK button.

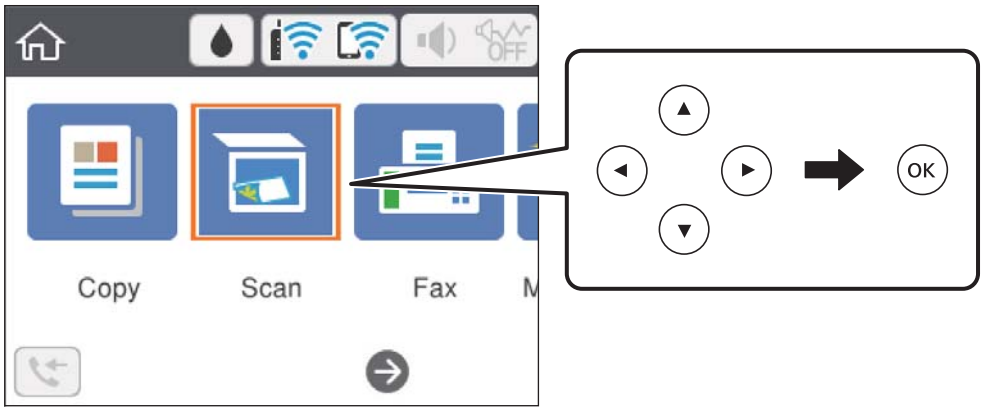

3. Select **Computer**.
4. Select the computer to which you want to save the scanned images.
   - ❏ If the **Select Computer** screen is displayed, select the computer from the screen.
   - ❏ If the **Scan to Computer** screen is displayed and the computer is already selected, make sure the selected computer is correct. If not, select to reselect the computer.

   Note:
   - ❏ *When the printer is connected to a network, you can select the computer to which you want to save the scanned image. You can display up to 20 computers on the printer's control panel. If you set* ***Network Scan Name (Alphanumeric)*** *on Epson Event Manager, it is displayed on the control panel.*
5. Select to select how to save the scanned image to a computer.
   - ❏ Save as JPEG: Saves the scanned image in JPEG format.
   - ❏ Save as PDF: Saves the scanned image in PDF format.
   - ❏ Attach to e-mail: Starts the email client on your computer, and then automatically attaches it to an email.
   - ❏ Follow custom setting: Saves the scanned image using the settings on the Epson Event Manager. You can change the scan settings such as the scanning size, folder to save to, or save format.
6. Press the ◇ button.

Related Information

➡ "Placing Originals" on page 60

Making Custom Settings in Epson Event Manager

You can set the scan settings for **Follow custom setting** in Epson Event Manager.

See the Epson Event Manager help for details.

1. Start Epson Event Manager.

2. Make sure that your scanner is selected as the **Scanner** on the **Button Settings** tab on the main screen.

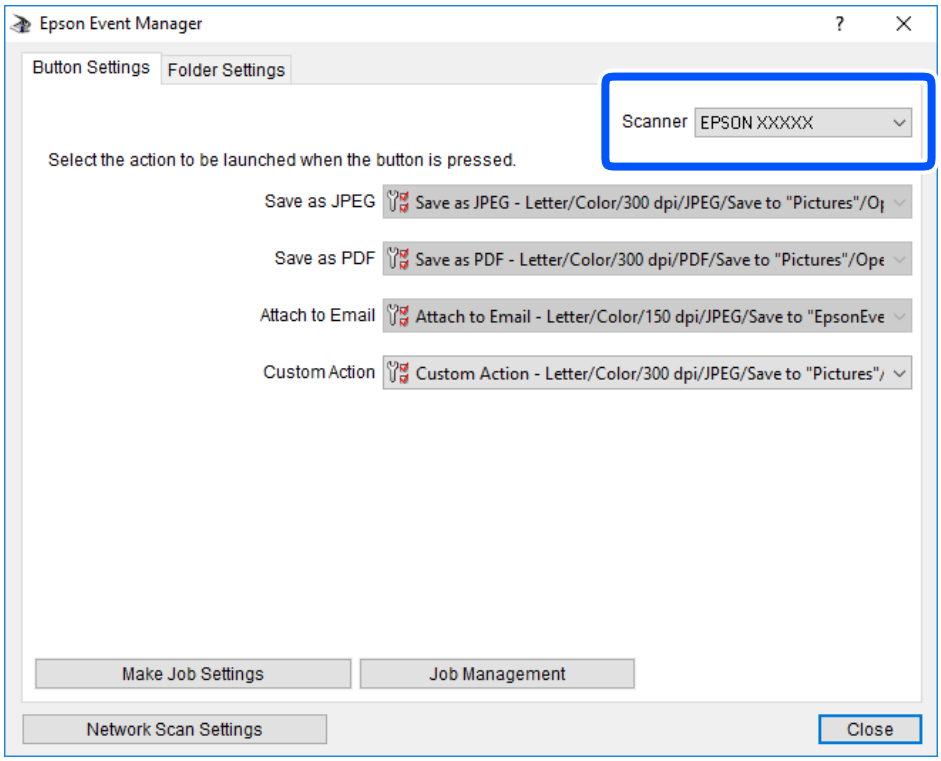

3. Click **Make Job Settings**.

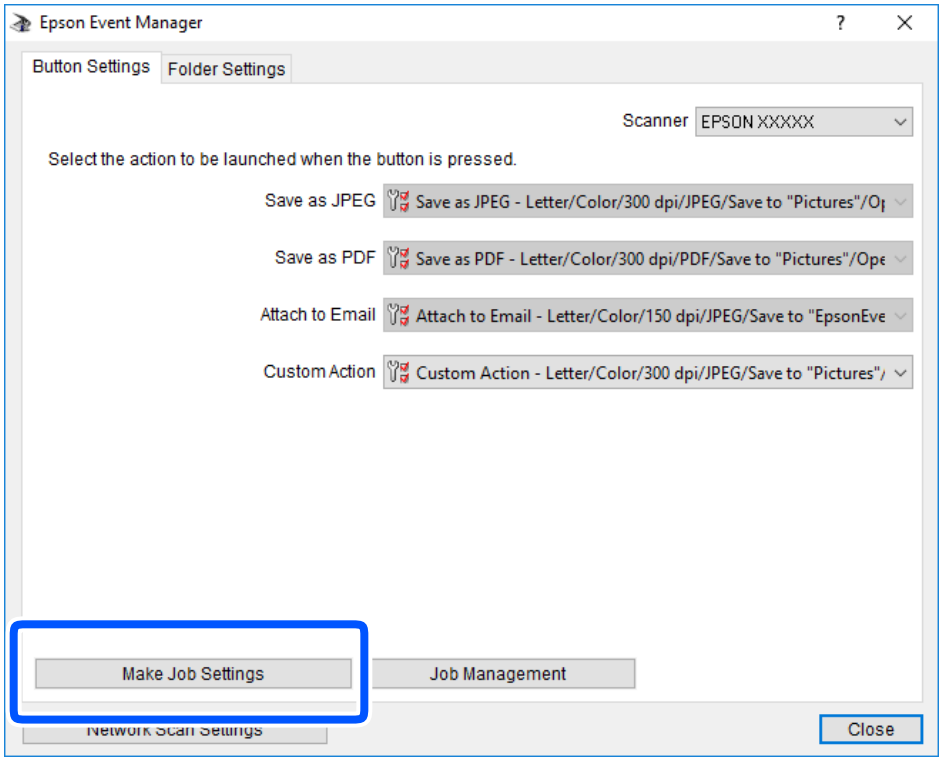

4. Make scan settings on the **Job Settings** screen.

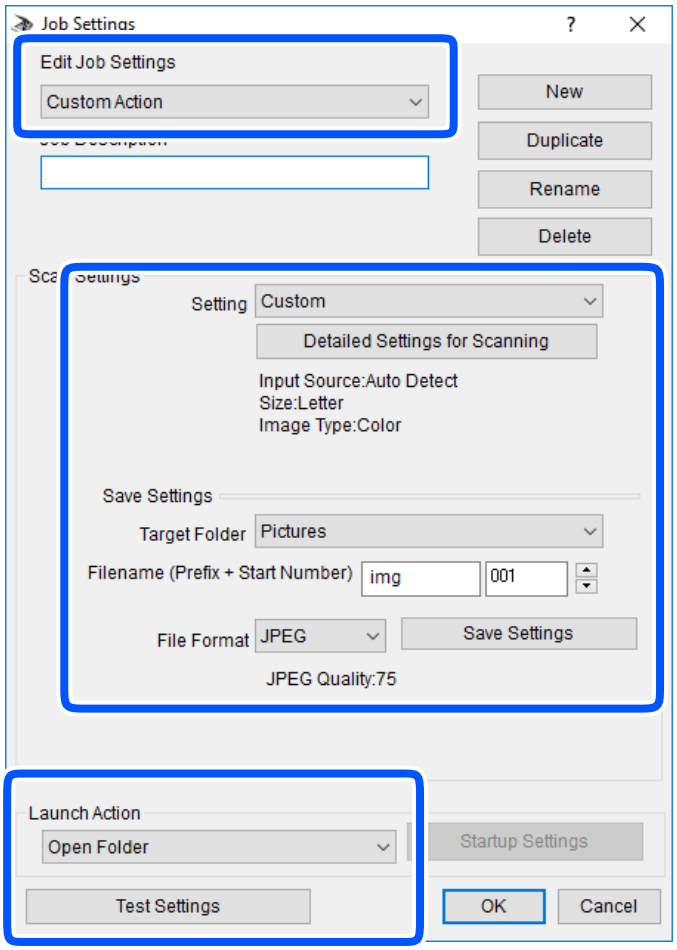

- ❏ Edit Job Settings: Select **Custom Action**.
- ❏ Setting: Scan using the best settings for the selected type of original. Click **Detailed Settings for Scanning** to set the items such as the resolution or the color for saving the scanned image.
- ❏ Target Folder: Select the save folder for the scanned image.
- ❏ Filename (Prefix + Start Number): Change the settings for the file name you want to save.
- ❏ File Format: Select the save format.
- ❏ Launch Action: Select the action when scanning.
- ❏ Test Settings: Starts test scanning using current settings.

5. Click **OK** to return to the main screen.

6. Make sure that the **Custom Action** is selected on the **Custom Action** list.

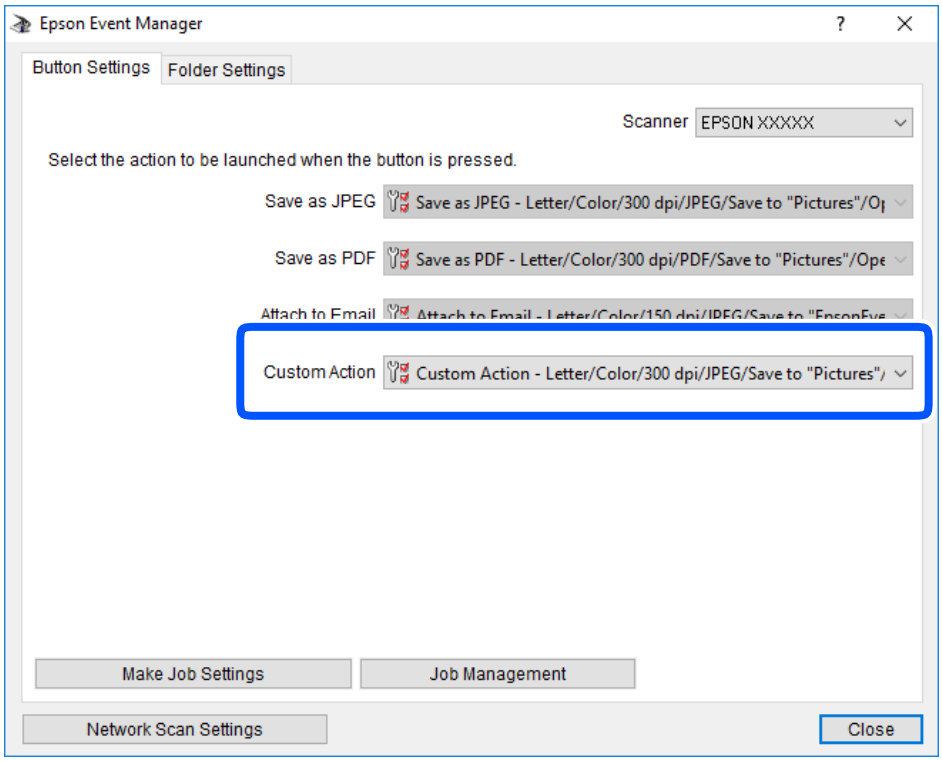

7. Click **Close** to close Epson Event Manager.

Scanning to the Cloud

You can send scanned images to cloud services. Before using this feature, make settings using Epson Connect. See the following Epson Connect portal website for details.

https://www.epsonconnect.com/

http://www.epsonconnect.eu (Europe only)

1. Make sure that you have made settings using Epson Connect.

2. Place the originals.

3. Select **Scan** on the home screen.

   To select an item, use the ▲▼◀▶ buttons, and then press the OK button.

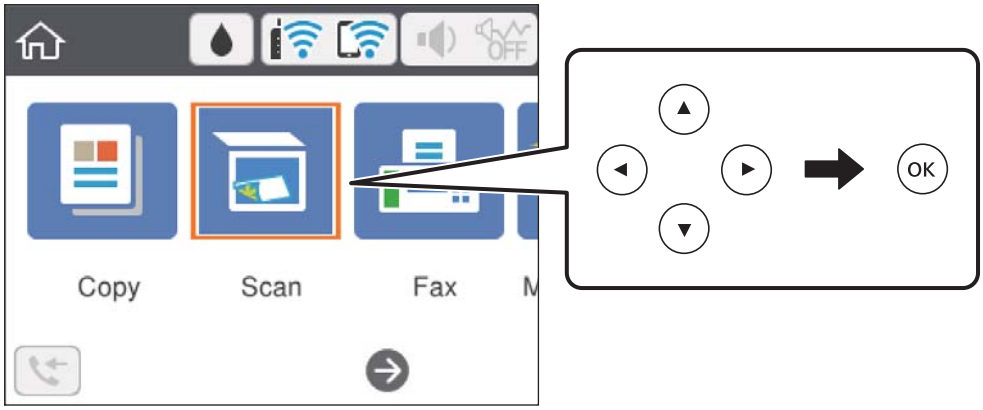

4. Select **Cloud**.

5. Select ⊕ on the top of the screen, and then select a destination.

6. Set items on **Scan** tab, such as the save format.

7. Select **Advanced Settings** tab, and then check settings, and change them if necessary.

8. Select **Scan** tab, and then press the ⊙ button.

Related Information

➡ "Placing Originals" on page 60

Basic Menu Options for Scanning to the Cloud

Note:
The items may not be available depending on other settings you made.

B&W/Color:

Select whether to scan in color or in monochrome.

JPEG/PDF:

Select the format in which to save the scanned image.

Advanced Menu Options for Scanning to the Cloud

Note:
The items may not be available depending on other settings you made.

Scan Area:

❏ Scan Size:

Select the scan size. To crop the white space around the text or image when scanning, select **Auto Cropping**. To scan at the maximum area of the scanner glass, select **Max Area**.

❏ Original Orientation:

Select the orientation of the original.

Original Type:

Select the type of your original.

Density:

Select the contrast of the scanned image.

Clear All Settings

Resets the scan settings to their defaults.

Scanning Using WSD

Note:

❏ *This feature is only available for computers running Windows 10/Windows 8.1/Windows 8/Windows 7/Windows Vista.*

❏ *If you are using Windows 7/Windows Vista, you need to setup your computer in advance using this feature.*

1. Place the originals.
2. Select **Scan** on the home screen.

   To select an item, use the ▲▼◀▶ buttons, and then press the OK button.

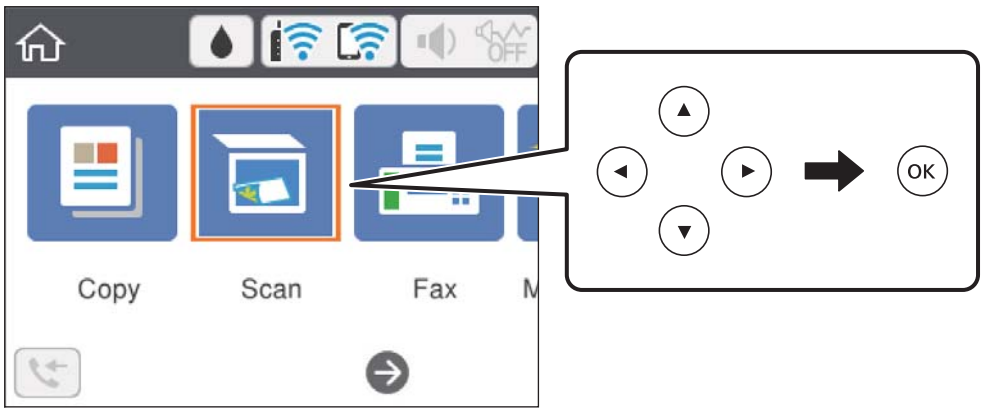

3. Select **WSD**.
4. Select a computer.
5. Press the ⓕ button.

Related Information

➡ "Placing Originals" on page 60

Setting Up a WSD Port

This section explains how to set up a WSD port for Windows 7/Windows Vista.

Note:
For Windows 10/Windows 8.1/Windows 8, the WSD port is set up automatically.

The following is necessary to set up a WSD port.

❏ The printer and the computer are connected to the network.

❏ The printer driver is installed on the computer.

1. Turn the printer on.
2. Click start, and then click **Network** on the computer.
3. Right-click the printer, and then click **Install**.

   Click **Continue** when the **User Account Control** screen is displayed.

   Click **Uninstall** and start again if the **Uninstall** screen is displayed.

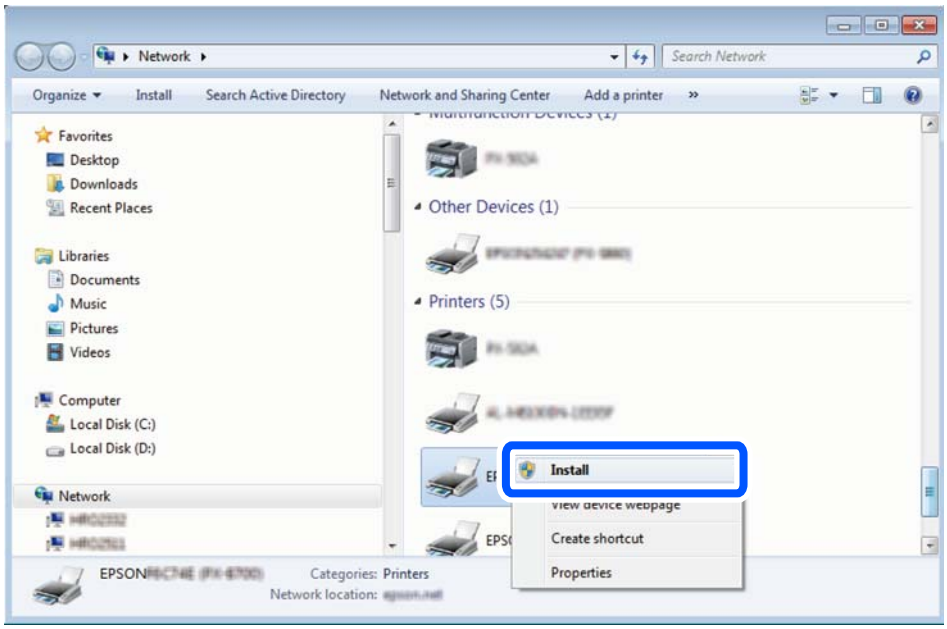

Note:
The printer name you set on the network and model name (EPSON XXXXXX (XX-XXXX)) are displayed on the network screen. You can check the printer's name set on the network from the printer's control panel or by printing a network status sheet.

4. Click **Your device is ready to use**.

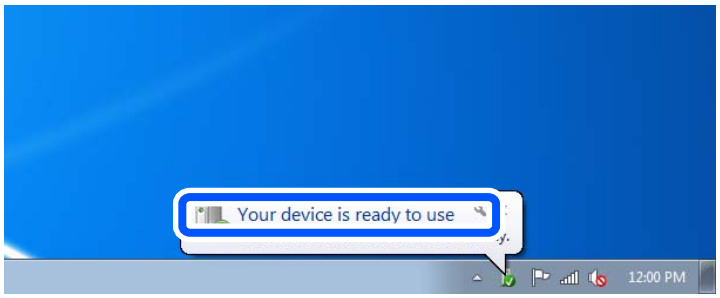

5. Check the message, and then click **Close**.

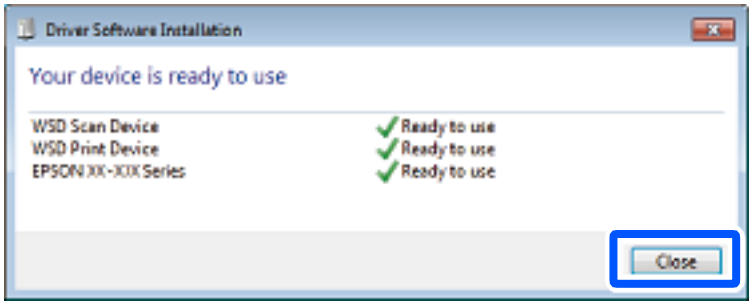

6. Open the **Devices and Printers** screen.
   - ❏ Windows 7
     Click start > **Control Panel** > **Hardware and Sound** (or **Hardware**) > **Devices and Printers**.
   - ❏ Windows Vista
     Click start > **Control Panel** > **Hardware and Sound** > **Printers**.

7. Check that an icon with the printer's name on the network is displayed.
   Select the printer name when using with WSD.

Scanning from a Computer

Scanning Using Epson Scan 2

You can scan by using the scanner driver "Epson Scan 2". See the Epson Scan 2 help for an explanation of each setting item.

Related Information

➡ "Application for Scanning Documents and Images (Epson Scan 2)" on page 178

Scanning Documents (Document Mode)

Using **Document Mode** in Epson Scan 2, you can scan originals using detailed settings that are suitable for text documents.

1. Place the originals.

   Note:
   If you want to scan multiple originals, place them into the ADF.

2. Start Epson Scan 2.

3. Select **Document Mode** from the **Mode** list.

4. Make the following settings on the **Main Settings** tab.

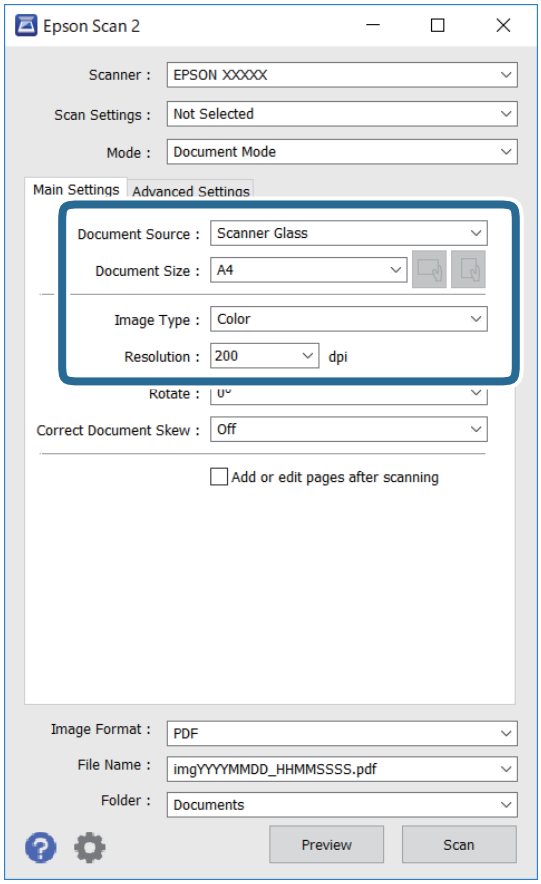

   ❏ Document Source: Select the source where the original is placed.

   ❏ Document Size: Select the size of the original you placed.

   ❏ / (Original orientation) buttons: Select the set orientation of the original you placed. Depending on the size of the original, this item may be set automatically and cannot be changed.

   ❏ Image Type: Select the color for saving the scanned image.

   ❏ Resolution: Select the resolution.

5. Make other scan settings if necessary.

   ❏ You can preview the scanned image by clicking the **Preview** button. The preview window opens, and the previewed image is displayed.

   When you performed preview using ADF, original is ejected from the ADF. Place the ejected original again.

❏ On the **Advanced Settings** tab, you can make detailed image adjustment settings that are suitable for text documents, such as the following.

- ❏ Remove Background: Remove the background of the originals.
- ❏ Text Enhancement: You can make blurred letters in the original clear and sharp.
- ❏ Auto Area Segmentation: You can make letters clear and images smooth when performing black and white scanning for a document that contains images.
- ❏ Color Enhance: You can enhance the color specified for the scanned image, and then save it in grayscale or black and white.
- ❏ Brightness: You can adjust the brightness for the scanned image.
- ❏ Contrast: You can adjust the contrast for the scanned image.
- ❏ Gamma: You can adjust the gamma (brightness of the intermediate range) for the scanned image.
- ❏ Threshold: You can adjust the border for monochrome binary (black and white).
- ❏ Unsharp Mask: You can enhance and sharpen the outlines of the image.
- ❏ Descreening: You can remove moiré patterns (web-like shadows) that appear when scanning printed papers such as a magazine.
- ❏ Edge Fill: You can remove the shadow created around the scanned image.
- ❏ Dual Image Output (Windows Only): You can scan once and save two images with different output settings at the same time.

Note:
The items may not be available depending on other settings you made.

6. Set the file saving settings.

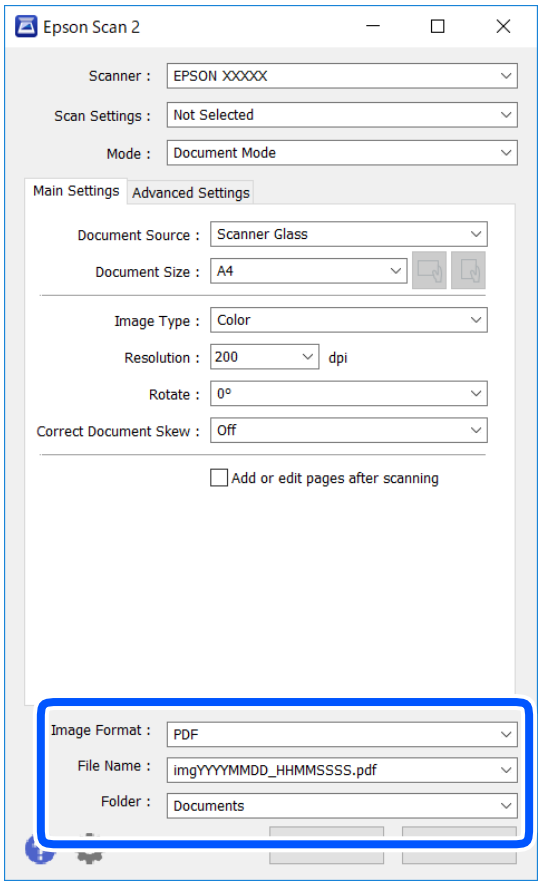

❏ Image Format: Select the save format from the list.

You can make detailed settings for each save format except BITMAP and PNG. Select **Options** from the list after selecting the save format.

❏ File Name: Confirm the save file name displayed.

You can change settings for the file name by selecting **Settings** from the list.

❏ Folder: Select the save folder for the scanned image from the list.

You can select another folder or create a new folder by selecting **Select** from the list.

7. Click **Scan**.

Related Information

➡ "Placing Originals" on page 60

Scanning Photos or Pictures (Photo Mode)

Using **Photo Mode** in Epson Scan 2, you can scan originals with wide variety of image adjustment features that are suitable for photos or pictures.

1. Place the originals.

By placing multiple originals on the scanner glass, you can scan them all at the same time. Make sure there is a gap of at least 20 mm between the originals.

Note:
You cannot use ADF when scanning from ***Photo Mode****.*

2. Start Epson Scan 2.

3. Select **Photo Mode** from the **Mode** list.

4. Make the following settings on the **Main Settings** tab.

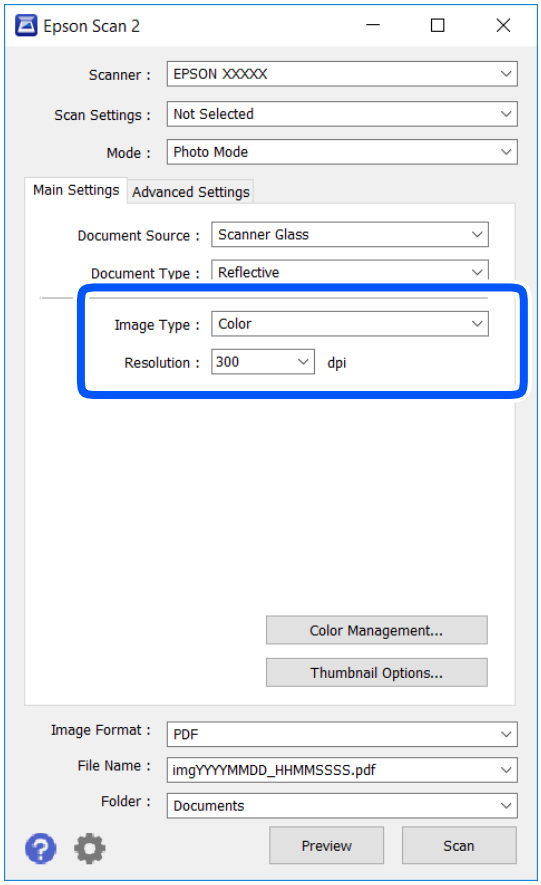

❏ Image Type: Select the color for saving the scanned image.

❏ Resolution: Select the resolution.

Note:
The ***Document Source*** *setting is fixed as* ***Scanner Glass****, and the* ***Document Type*** *setting is fixed as* ***Reflective****. (****Reflective*** *means originals which are not transparent, for example ordinary papers or photos.) You cannot change these settings.*

5. Click **Preview**.

   The preview window opens, and the previewed images are displayed as thumbnails.

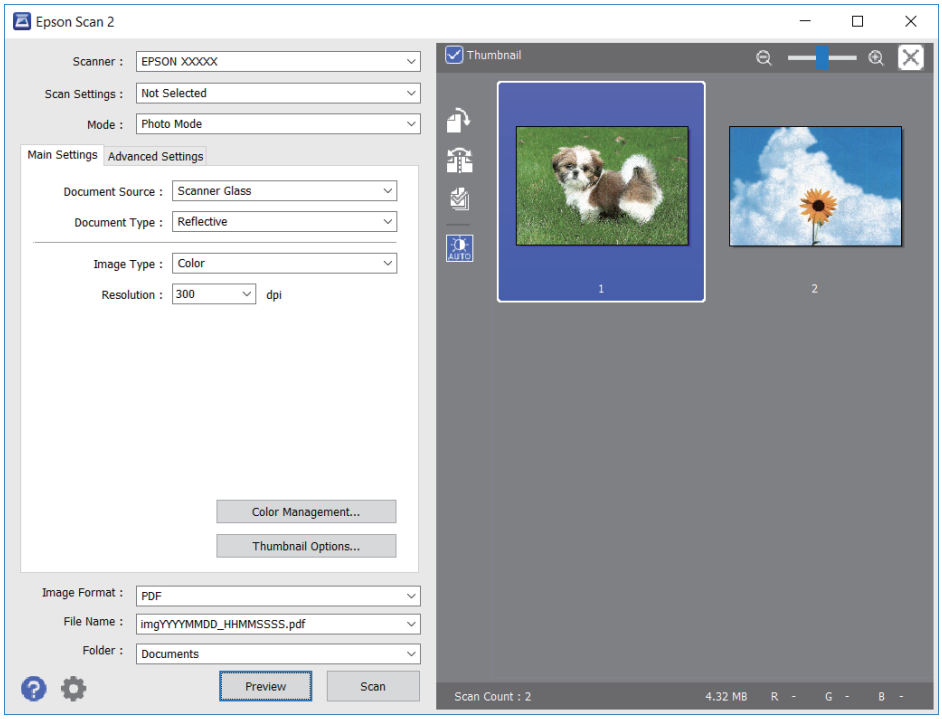

Note:
*To preview the entire scanned area, clear the **Thumbnail** check box at the top of the preview widow.*

6. Confirm the preview, and make image adjustment settings on the **Advanced Settings** tab if necessary.

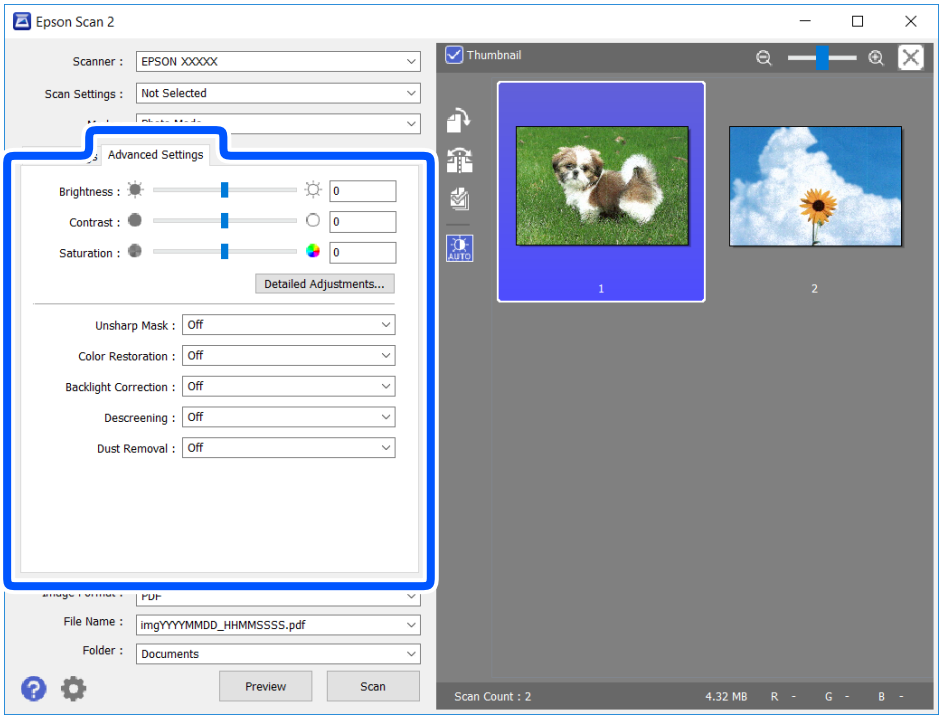

You can adjust the scanned image using detailed settings that are suitable for photos or pictures, such as the following.

- ❏ Brightness: You can adjust the brightness for the scanned image.
- ❏ Contrast: You can adjust the contrast for the scanned image.
- ❏ Saturation: You can adjust the saturation (color vividness) for the scanned image.
- ❏ Unsharp Mask: You can enhance and sharpen the outlines of the scanned image.
- ❏ Color Restoration: You can correct images that have faded to return them to their original colors.
- ❏ Backlight Correction: You can lighten scanned images that are dark due to backlight.
- ❏ Descreening: You can remove moiré patterns (web-like shadows) that appear when scanning printed papers such as a magazine.
- ❏ Dust Removal: You can remove dust on the scanned image.

Note:

- ❏ *The items may not be available depending on other settings you made.*
- ❏ *Depending on the original, the scanned image may not be adjusted correctly.*
- ❏ *When multiple thumbnails are created, you can adjust the image quality for each thumbnail. Depending on the adjustment items, you can adjust the quality of scanned images all together by selecting multiple thumbnails.*

7. Set the file saving settings.

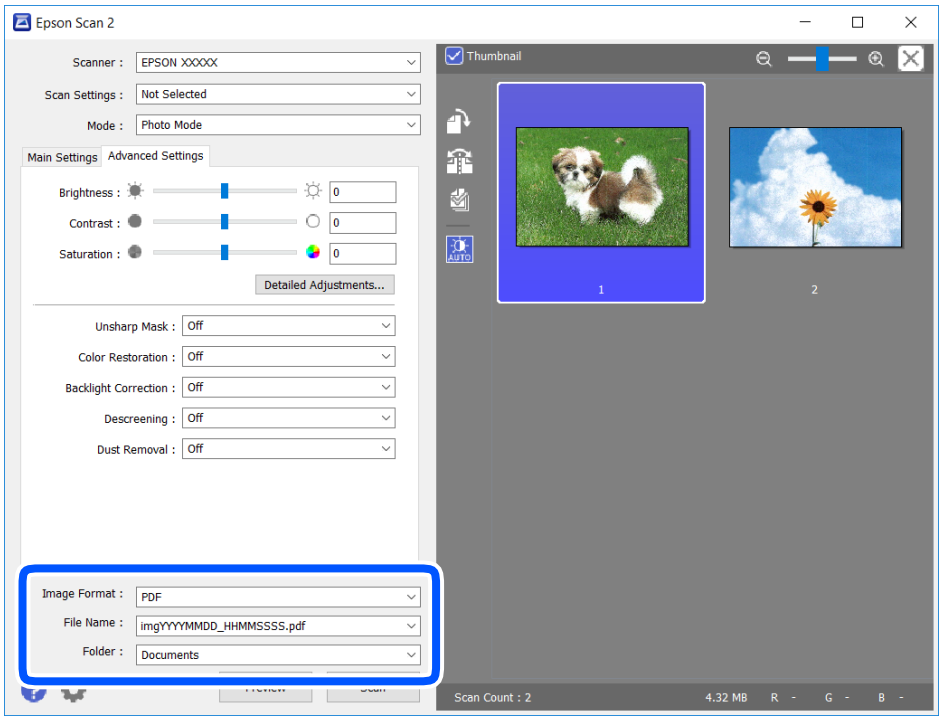

- ❏ Image Format: Select the save format from the list.

  You can make detailed settings for each save format except BITMAP and PNG. Select **Options** from the list after selecting the save format.

- ❏ File Name: Confirm the save file name displayed.

  You can change settings for the file name by selecting **Settings** from the list.

❏ Folder: Select the save folder for the scanned image from the list.

You can select another folder or create a new folder by selecting **Select** from the list.

8. Click **Scan**.

Related Information

➡ "Placing Originals" on page 60

Scanning from Smart Devices

Epson iPrint is an application that allows you to scan photos and documents from a smart device, such as a smartphone or tablet, that is connected to the same wireless network as your printer. You can save the scanned data on a smart device or to Cloud services, send it by email, or print it.

If you start Epson iPrint when the printer is not connected to the network, a message is displayed instructing you to connect to the printer. Follow the instructions to complete the connection. See the URL below for the operating conditions.

http://epson.sn

Installing Epson iPrint

You can install Epson iPrint on your smart device from the following URL or QR code.

http://ipr.to/c

Scanning Using Epson iPrint

Start Epson iPrint from your smart device and select the item you want to use from the home screen.

The following screens are subject to change without notice.

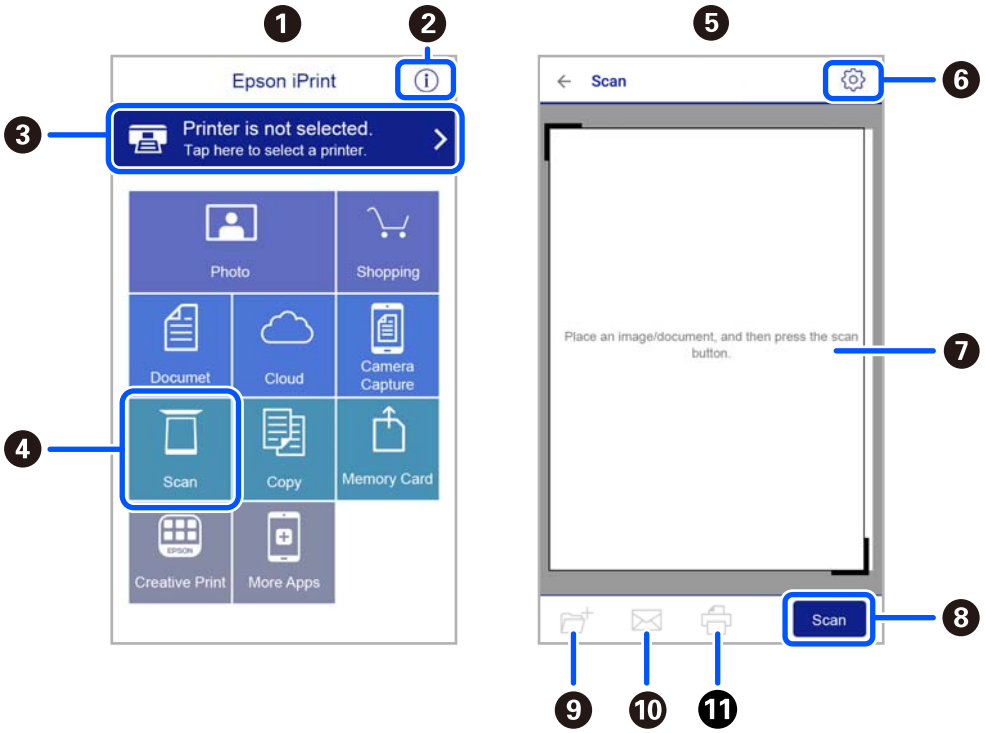

❶	Home screen displayed when the application is started.
❷	Displays information on how to setup the printer and a FAQ.
❸	Displays the screen where you can select the printer and make printer settings. Once you have selected the printer, you do not need to select it again from the next time.
❹	Displays the scanning screen.
❺	The scanning screen displayed when the scan menu is selected.
❻	Displays the screen where you can make scan settings such as resolution.
❼	Displays scanned images.
❽	Starts scanning.
❾	Displays the screen where you can save scanned data to a smart device or Cloud services.
❿	Displays the screen where you can send scanned data by email.
⓫	Displays the screen where you can print scanned data.

Faxing

Before Using Fax Features

Check the following before you start using the fax features.

- ❏ The printer and the phone line, and (if necessary) the phone machine are connected correctly
- ❏ Fax basic settings (Fax Setting Wizard) is complete
- ❏ Other necessary Fax Settings are complete

See "Related Information" below to make settings.

Related Information

➡ "Fax Settings" on page 76

Sending Faxes Using the Printer

Sending Faxes Using the Control Panel

Related Information

➡ "Sending Faxes Automatically Using the Control Panel" on page 141

Sending Faxes Automatically Using the Control Panel

You can send faxes by entering fax numbers for recipients on the control panel.

1. Place the originals.

   You can send up to 100 pages in one transmission; however depending on the remaining amount of memory, you may not be able to send faxes even with less than 100 pages.

2. Select **Fax** on the home screen.

   To select an item, use the ▲▼◀▶ buttons, and then press the OK button.

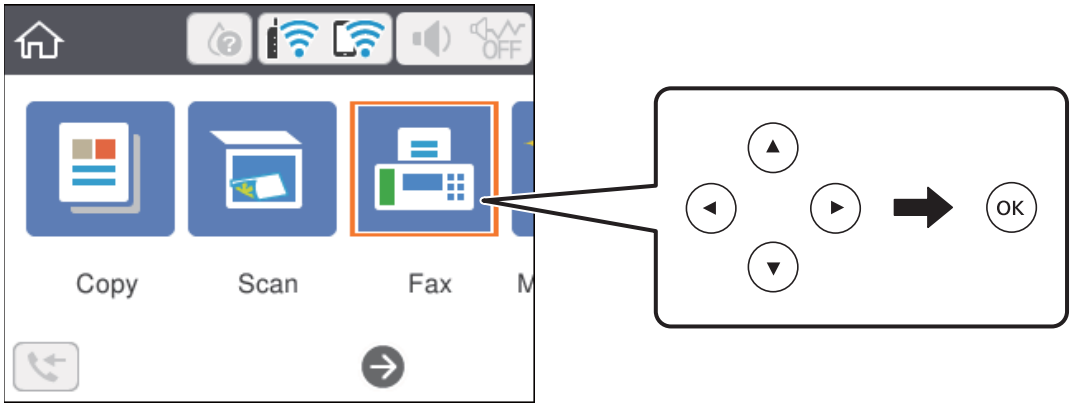

3. Specify the recipient.

   You can send the same monochrome fax to up to 100 recipients. However, a color fax can only be sent to one recipient at a time.

   ❏ To enter manually: Select **Keypad**, enter a fax number on the screen displayed, and then select **OK**.

   - To add a pause (pause for three seconds during dialing), enter a hyphen(-).

   - If you have set an external access code in **Line Type**, enter "#" (hash) instead of the actual external access code at the beginning of the fax number.

   Note:

   If you cannot manually enter a fax number, **Direct Dialing Restrictions** in **Security Settings** is set to **On**. Select fax recipients from the contacts list or the sent fax history.

   ❏ To select from the contacts list: Select **Contacts** and select recipients you want to send. If the recipient you want to send to has not been registered in **Contacts** yet, press the + button to register it.

   ❏ To select from the sent fax history: Select **Recent**, and then select a recipient.

   Note:
   To delete recipients you have entered, select the field containing the list of recipients at the top of the LCD screen, select the recipient from the list, and then press the OK button.

4. Select the **Fax Settings** tab, and then make settings such as the resolution and the sending method as necessary.

5. Press the ◇ button to send the fax.

6. When sending is complete, remove the originals.

Note:

❏ *If the fax number is busy or there is some problem, the printer automatically redials after one minute.*

❏ *To cancel sending, press the ⊘ button.*

❏ *It takes longer to send a fax in color because the printer performs scanning and sending simultaneously. While the printer is sending a fax in color, you cannot use the other features.*

Related Information

➡ "Managing Contacts" on page 64

➡ "Placing Originals" on page 60
➡ "Menu Options for Faxing" on page 148

Sending Faxes Dialing from the External Phone Device

You can send a fax by dialing using the connected telephone when you want to talk over the phone before sending a fax, or when the recipient's fax machine does not switch to the fax automatically.

1. Place the originals.

   You can send up to 100 pages in one transmission.

2. Pick up the handset of the connected telephone, and then dial the recipient's fax number using the phone.

   Note:
   When the recipient answers the phone, you can talk with the recipient.

3. Select **Fax** on the home screen.

   To select an item, use the ▲ ▼ ◀ ▶ buttons, and then press the OK button.

4. Select the **Fax Settings** tab, and then make settings such as the resolution and the sending method as necessary.

5. When you hear a fax tone, press the ⊙ button, and then hang up the handset.

   Note:
   When a number is dialed using the connected telephone, it takes longer to send a fax because the printer performs scanning and sending simultaneously. While sending the fax, you cannot use the other features.

6. When sending is complete, remove the originals.

Related Information

➡ "Placing Originals" on page 60
➡ "Fax Settings" on page 149

Various Ways of Sending Faxes

Related Information

➡ "Sending Many Pages of a Monochrome Document (Direct Send)" on page 143
➡ "Sending Faxes in Monochrome at Specified Time of the Day (Send Fax Later)" on page 144
➡ "Sending Different Size Documents Using ADF (ADF Continuous Scan)" on page 145

Sending Many Pages of a Monochrome Document (Direct Send)

When sending a fax in monochrome, the scanned document is temporarily stored in the printer's memory. Therefore, sending a lot of pages may cause the printer to run out of memory and stop sending the fax. You can avoid this by enabling the **Direct Send** feature, however, it takes longer to send the fax because the printer performs scanning and sending simultaneously. You can use this feature when there is only one recipient.

1. Place the originals.
2. Select **Fax** on the home screen.

   To select an item, use the ▲▼◀▶ buttons, and then press the OK button.
3. Specify the recipient.
4. Select the **Fax Settings** tab, and then select **Direct Send** to set this to **On**.

   You can also make settings such as the resolution and the sending method as necessary.
5. Send the fax.

Related Information

➡ "Placing Originals" on page 60
➡ "Sending Faxes Automatically Using the Control Panel" on page 141
➡ "Fax Settings" on page 149

Sending Faxes in Monochrome at Specified Time of the Day (Send Fax Later)

You can set to send a fax at a specified time. Only monochrome faxes can be sent when the time to send is specified.

1. Select **Fax** on the home screen.

   To select an item, use the ▲▼◀▶ buttons, and then press the OK button.
2. Specify the recipient.

   "Recipient" on page 148
3. Select the **Fax Settings** tab, and then select **Send Fax Later**.
4. Select the **Send Fax Later** field to set this to **On**.
5. Select the **Time** field, enter the time you want to send the fax, and then select **OK**.
6. Select **Done** to apply the settings.

   You can also make settings such as the resolution and the sending method as necessary.
7. Send the fax.

   Note:
   *You cannot send another fax until the fax has been sent at the specified time. If you want to send another one, you need to cancel the scheduled fax by selecting **Fax** on the home screen, and then deleting it.*

Related Information

➡ "Placing Originals" on page 60
➡ "Sending Faxes Automatically Using the Control Panel" on page 141
➡ "Fax Settings" on page 149

Sending Different Size Documents Using ADF (ADF Continuous Scan)

Sending faxes by placing originals one by one, or by placing originals by size, you can send them as one document at their original sizes.

If you place different sized originals in the ADF, all of the originals are sent at the largest size among them. To send originals at their original sizes, do not place originals with mixed sizes.

1. Place the first batch of originals at the same size.
2. Select **Fax** on the home screen.

   To select an item, use the ▲ ▼ ◀ ▶ buttons, and then press the OK button.
3. Specify the recipient.
4. Select the **Fax Settings** tab, and then select **ADF Continuous Scan** to set this to **On**.

   You can also make settings such as the resolution and the sending method as necessary.
5. Press the ⓕ (**Send**) button.
6. When scanning the first set of originals is complete and a message is displayed on the control panel asking you to scan the next set of originals, select **Yes**, set the next originals, and then press the ⓕ button.

   Note:
   If you leave the printer untouched for 20 seconds after prompted to set the next originals, the printer stops storing and starts sending the document.

Related Information

➡ "Placing Originals" on page 60
➡ "Sending Faxes Automatically Using the Control Panel" on page 141
➡ "Fax Settings" on page 149

Receiving Faxes on the Printer

If the printer is connected to the phone line and basic settings have been completed using the Fax Setting Wizard, you can receive faxes.

There are two ways of receiving faxes.

❏ Receiving an incoming fax

❏ Receiving a fax by making a call (Polling Receive)

Received faxes are printed in the printer's initial settings.

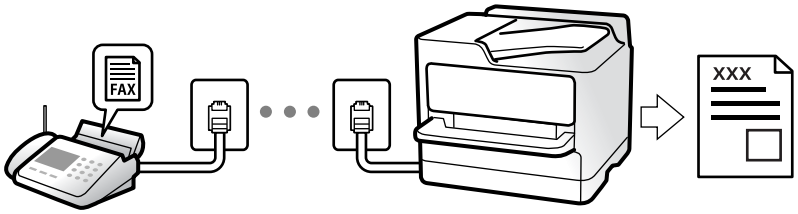

To check the status of the fax settings, you can print a **Fax Settings List** by selecting **Fax** > (More) > **Fax Report** > **Fax Settings List**.

See "Related Information" below to make settings.

Related Information

➡ "Making Settings Individually for Printer's Fax Features" on page 81

Receiving Incoming Faxes

There are two options in **Receive Mode**.

Related Information

➡ "Usage of Auto Mode" on page 146
➡ "Usage of Manual Mode" on page 147

Usage of Auto Mode

This mode allows you to use the line for the following uses.

❏ Using the line for faxing only (external telephone is not necessary)

❏ Using the line for faxing mainly, and sometimes phoning

Receiving Faxes Without an External Phone Device

The printer automatically switches to receive faxes when the number of rings you set in **Rings to Answer** is complete.

Receiving Faxes With an External Phone Device

A printer with an external phone device works as follows.

❏ When the answering machine answers within the number of rings set in **Rings to Answer**:

- If the ringing is for a fax: The printer automatically switches to receive faxes.
- If the ringing is for a voice call; The answering machine can receive voice calls and record voice messages.

❏ When you pick up the handset within the number of rings set in **Rings to Answer**:

- If the ringing is for a fax: You can receive the fax using the same steps as for **Manual**. Select **Fax** on the printer's home screen, press the button to select receiving a fax, and then press the button. Next hang up the handset.
- If the ringing is for a voice call: You can answer the phone as normal.

❏ When the ringing stops and the printer automatically switches to receive faxes:

- If the ringing is for a fax: The printer starts receiving faxes.
- If the ringing is for a voice call: You cannot answer the phone. Ask the person to call you back.

Note:
*Set the number of rings to answer for the answering machine to a lower number than the number set in **Rings to Answer**. Otherwise, the answering machine cannot receive voice calls to record voice messages. For details on setting up the answering machine, see the manual supplied with the answering machine.*

Related Information

➡ "Usage of Manual Mode" on page 147

Usage of Manual Mode

This mode is mainly for making phone calls, but is also for faxing.

Receiving Faxes

When the telephone rings, you can answer the ringing manually by picking up the handset.

❏ When you hear a fax signal (baud):

Select **Fax** on the printer's home screen, press the ↻ button to select receiving a fax, and then press the ◇ button. Next hang up the handset.

❏ If the ringing is for a voice call:

You can answer the phone as normal.

Receiving Faxes Using only the Connected Telephone

When **Remote Receive** is set, you can receive faxes by simply entering the **Start Code**.

When the telephone rings, pick up the handset. When you hear a fax tone (baud), dial the two digit **Start Code**, and then hang up the handset.

Receiving Faxes by Making a Phone Call

You can receive a fax stored on another fax machine by dialing the fax number.

Related Information

➡ "Receiving Faxes by Polling (Polling Receive)" on page 147

Receiving Faxes by Polling (Polling Receive)

You can receive a fax stored on another fax machine by dialing the fax number. Use this feature to receive a document from a fax information service. However, if the fax information service has an audio guidance feature that you need to follow to receive a document, you cannot use this feature.

Note:
To receive a document from a fax information service that uses audio guidance, just dial the fax number using the connected telephone, and operate the phone and the printer following the audio guidance.

1. Select **Fax** on the home screen.
2. Select Menu (More).
3. Select **Polling Receive** to set this to **On**, and then select **Close**.

4. Enter the fax number.

   Note:
   *When **Security Settings** > **Direct Dialing Restrictions** is set to **On**, you can only select fax recipients from the contact list or the sent fax history. You cannot manually enter a fax number.*

5. Press the ◇ button.

Related Information

➡ "Sending Faxes Dialing from the External Phone Device" on page 143
➡ "More" on page 150

Using Other Faxing Features

Printing Fax Report Manually

1. Select **Fax** on the home screen.

   To select an item, use the ▲ ▼ ◀ ▶ buttons, and then press the OK button.

2. Select Menu (More).

3. Select **Fax Report**.

4. Select the report you want to print, and then follow the on-screen instructions.

   Note:
   *You can change the report format. From the home screen, select **Settings** > **General Settings** > **Fax Settings** > **Report Settings**, and then change the **Attach Fax image to report** or **Report Format** settings.*

Related Information

➡ "More" on page 150
➡ "Report Settings Menu" on page 88

Menu Options for Faxing

Recipient

Select the menus on the control panel as described below:

Fax > **Recipient**

Contacts	Select a recipient from the contacts list. You can also add or edit a contact.
Recent	Select a recipient from the sent fax history. You can also add the recipient to the contacts list.

Keypad	Manually enter a fax number.

Fax Settings

Select the menus on the control panel as described below:

Fax > **Fax Settings**

Scan Settings

Resolution	Select the resolution of the outgoing fax. If you select a higher resolution, the data size becomes larger and it takes time to send the fax.
Density	Sets the density of the outgoing fax. + makes the density darker, and - makes it lighter.
ADF Continuous Scan	Sending faxes by placing originals one by one, or by placing originals by size, you can send them as one document at their original sizes. See the related information below on this topic.
Original Size (Glass)	Select the size and orientation of the original you placed on the scanner glass.
Color Mode	Select whether to scan in color or in monochrome.

Fax Send Settings

Direct Send	Sends a monochrome fax while scanning the originals. Since scanned originals are not stored temporarily in the printer's memory even when sending a large volume of pages, you can avoid printer errors due to a lack of memory. Note that sending using this feature takes longer than not using this feature. See the related information below on this topic. You cannot use this feature when you send a fax to multiple recipients.
Send Fax Later	Sends a fax at a time you specified. Only a monochrome fax is available when using this option. See the related information below on this topic.
Add Sender Information	❏ Add Sender Information Select the position where you want to include the header information (sender name and fax number) in the outgoing fax, or not to include the information. - **Off**: Sends a fax with no header information. - **Outside of Image**: Sends a fax with header information in the top white margin of the fax. This keeps the header from overlapping with the scanned image, however, the fax received by the recipient may be printed across two sheets depending on the size of the originals. - **Inside of Image**: Sends a fax with header information approximately 7 mm lower than the top of the scanned image. The header may overlap with the image, however, the fax received by the recipient will not be split into two documents. ❏ Fax Header Select the header for the recipient. To use this feature, you should register multiple headers in advance. ❏ Additional Information Select the information you want to add. You can select one from **Your Phone Number** and **Destination List**.
Transmission Report	Prints a transmission report after you send the fax. **Print on Error** prints a report only when an error occurs.

Related Information

➡ "Sending Different Size Documents Using ADF (ADF Continuous Scan)" on page 145
➡ "Sending Many Pages of a Monochrome Document (Direct Send)" on page 143
➡ "Sending Faxes in Monochrome at Specified Time of the Day (Send Fax Later)" on page 144

More

Selecting Menu in **Fax** on the home screen displays the **More** menu.

Transmission Log	You can check the history of sent or received fax jobs.
Fax Report	❏ Last Transmission Prints a report for the previous fax that was sent or received through polling. ❏ Fax Log Prints a transmission report. You can set to print this report automatically using the following menu. **Settings** > **General Settings** > **Fax Settings** > **Report Settings** > **Fax Log Auto Print** ❏ Fax Settings List Prints the current fax settings. ❏ Protocol Trace Prints a detailed report for the previous fax that was sent or received.
Polling Receive	When this is set to **On** and you call the sender's fax number, you can receive documents from the sender's fax machine. See the related information below for details on how to receive faxes using **Polling Receive**. When you leave the Fax menu, the setting returns to **Off** (default).
Reprint Faxes	You can reprint the received fax.
Fax Settings	Accesses **Settings** > **General Settings** > **Fax Settings**.

Related Information

➡ "Receiving Faxes by Polling (Polling Receive)" on page 147

Menu Options for User Settings

Select the menus on the control panel as described below.

Settings > **User Settings** > **Fax**

The settings made in this menu become your default settings for sending faxes. For explanations on the setting items, see the **Fax Settings** in the **Fax** menu.

Sending a Fax from a Computer

You can send faxes from the computer by using the FAX Utility and PC-FAX driver.

Note:

❏ *Check if the FAX Utility and the printer's PC-FAX driver has been installed before using this feature.*

"Application for Configuring Fax Operations and Sending Faxes (FAX Utility)" on page 181

"Application for Sending Faxes (PC-FAX Driver)" on page 181

❏ *If the FAX Utility is not installed, install the FAX Utility using the EPSON Software Updater (application for updating software).*

Related Information

➡ "Application for Updating Software and Firmware (Epson Software Updater)" on page 183

➡ "Installing the Latest Applications" on page 184

Sending Documents Created Using an Application (Windows)

By selecting a printer fax from the **Print** menu of an application like Microsoft Word or Excel, you can directly transmit data such as documents, drawings, and tables you have created, with a cover sheet.

Note:

The following explanation uses Microsoft Word as an example. The actual operation may differ depending on the application you use. For details, see the application's help.

1. Using an application, create a document to transmit by fax.
2. Click **Print** from the **File** menu.

   The application's **Print** window appears.
3. Select **XXXXX (FAX)** (where XXXXX is your printer name) in **Printer**, and then check the settings for fax sending.

   ❏ Specify **1** in **Number of copies**. Fax may not be transmitted correctly if you specify **2** or more.

   ❏ You can send up to 100 pages in one fax transmission.
4. Click **Printer Properties** or **Properties** if you want to specify **Paper Size**, **Orientation**, **Color**, **Image Quality**, or **Character Density**.

   For details, see the PC-FAX driver help.
5. Click **Print**.

   Note:

   *When Using FAX Utility for the first time, a window for registering your information is displayed. Enter the necessary information, and then click **OK**.*

   Recipient Settings screen of FAX Utility is displayed.
6. When you want to send other documents in the same fax transmission, select **Add documents to send** checkbox.

   The screen for adding documents is displayed when you click **Next** in step 9.
7. Select **Attach a cover sheet** checkbox if necessary.

8. Specify a recipient.

❏ Selecting a recipient (name, fax number and so on) from **PC-FAX Phone Book**:

If the recipient is saved in the phone book, do the steps below.

❶ Click the **PC-FAX Phone Book** tab.

❷ Select the recipient from the list and click **Add**.

❏ Selecting a recipient (name, fax number and so on) from the contacts on the printer:

If the recipient is saved in the contacts on the printer, do the steps below.

❶ Click the **Contacts on Printer** tab.

❷ Select contacts from the list and click **Add** to proceed to **Add to Recipient** window.

❸ Select the contacts from the list displayed, and then click **Edit**.

❹ Add the personal data such as **Company/Corp.** and **Title** as necessary, and then click **OK** to return to the **Add to Recipient** window.

❺ As necessary, select the checkbox of **Register in the PC-FAX Phone Book** to save the contacts to **PC-FAX Phone Book**.

❻ Click **OK**.

❏ Specifying a recipient (name, fax number and so on) directly:

Do the steps below.

❶ Click the **Manual Dial** tab.

❷ Enter the necessary information.

❸ Click **Add**.

Furthermore, by clicking **Save to Phone Book**, you can save the recipient in the list under the **PC-FAX Phone Book** tab.

Note:

❏ *If your printer's Line Type is set to **PBX** and the access code has been set to use # (hash) instead of entering the exact prefix code, enter # (hash). For details, see Line Type in Basic Settings from related information link below.*

❏ *If you have selected **Enter fax number twice** in the **Optional Settings** on the FAX Utility main screen, you need to enter the same number again when you click **Add** or **Next**.*

The recipient is added to the **Recipient List** displayed in the upper part of the window.

9. Click **Next**.

❏ When you have selected **Add documents to send** checkbox, follow the steps below to add documents in the **Document Merging** window.

❶ Open a document you want to add, and then select the same printer (fax name) in the **Print** window. The document is added to the **Document List to Merge** list.

❷ Click **Preview** to check the merged document.

❸ Click **Next**.

Note:

*The **Image Quality** and **Color** settings you have selected for the first document are applied to other documents.*

❏ When you have selected **Attach a cover sheet** checkbox, specify the content of the cover sheet in the **Cover Sheet Settings** window.

❶ Select a cover sheet from samples in the **Cover Sheet** list. Note that there is no function to create an original cover sheet or to add an original cover sheet to the list.

❷ Enter the **Subject** and **Message**.

❸ Click **Next**.

Note:
*Set the following as necessary in **Cover Sheet Settings**.*

❏ *Click **Cover Sheet Formatting** if you want to change the order of the items on the cover sheet. You can select the cover sheet size in **Paper Size**. You can also select a cover sheet at a different size to the document being transmitted.*

❏ *Click **Font** if you want to change the font used for the text on the cover sheet.*

❏ *Click **Sender Settings** if you want to change the sender information.*

❏ *Click **Detailed Preview** if you want to check the cover sheet with the subject and the message you entered.*

10. Check the transmission content and click **Send**.

    Make sure the name and fax number of the recipient are correct before transmitting. Click **Preview** to preview the cover sheet and document to transmit.

    Once transmission starts, a window displaying the transmission status appears.

    Note:

    ❏ *To stop transmitting, select the data, and click **Cancel** . You can also cancel using the printer's control panel.*

    ❏ *If an error occurs during transmission, the **Communication error** window appears. Check the error information and retransmit.*

    ❏ *The Fax Status Monitor screen (the screen mentioned above where you can check the transmission status) is not displayed if Display Fax Status Monitor During Transmission is not selected in the **Optional Settings** screen of the FAX Utility main screen.*

Related Information

➡ "Basic Settings Menu" on page 86

Sending Documents Created Using an Application (Mac OS)

By selecting a fax-capable printer from the **Print** menu of a commercially available application, you can send data such as documents, drawings, and tables, you have created.

Note:
The following explanation uses Text Edit, a standard Mac OS application as an example.

1. Create the document you want to send by fax in an application.

2. Click **Print** from the **File** menu.

   The application's **Print** window is displayed.

3. Select your printer (fax name) in **Name**, click ▼ to display the detailed settings, check the print settings, and then click **OK**.

4. Make settings for each item.

   ❏ Specify **1** in **Number of copies**. Even if you specify **2** or more, only 1 copy is sent.

   ❏ You can send up to 100 pages in one fax transmission.

   Note:
   The page size of documents you can send is the same as the paper size you can fax from the printer.

5. Select Fax Settings from the popup menu, and then make settings for each item.

   See the PC-FAX driver's help for explanations on each setting item.

   Click  at the bottom left of the window to open the PC-FAX driver's help.

6. Select the Recipient Settings menu, and then specify the recipient.

   ❏ Specifying a recipient (name, fax number, and so on) directly:

   Click the **Add** item, enter the necessary information, and then click . The recipient is added to the Recipient List displayed in the upper part of the window.

   If you have selected "Enter fax number twice" in the PC-FAX driver settings, you need to enter the same number again when you click .

   If your fax connection line requires a prefix code, enter External Access Prefix.

   Note:
   *If your printer's Line Type is set to **PBX** and the access code has been set to use # (hash) instead of entering the exact prefix code, enter # (hash). For details, see Line Type in Basic Settings from Related Information link below.*

   ❏ Selecting a recipient (name, fax number, and so on) from the phone book:

   If the recipient is saved in the phone book, click . Select the recipient from the list, and then click **Add** > **OK**.

   If your fax connection line requires a prefix code, enter External Access Prefix.

   Note:
   *If your printer's Line Type is set to **PBX** and the access code has been set to use # (hash) instead of entering the exact prefix code, enter # (hash). For details, see Line Type in Basic Settings from Related Information link below.*

7. Check the recipient settings, and then click **Fax**.

   Sending starts.

   Make sure the name and fax number of the recipient are correct before transmitting.

   Note:

   ❏ *If you click the printer icon in Dock, the transmission status check screen is displayed. To stop sending, click the data, and then click **Delete**.*

   ❏ *If an error occurs during transmission, the **Sending failed** message is displayed. Check the transmission records on the **Fax Transmission Record** screen.*

   ❏ *Mixed paper size documents may not be sent correctly.*

Related Information

➡ "Basic Settings Menu" on page 86

Receiving Faxes on a Computer

You can receive faxes and save them as PDF files to the computer connected to the printer. The FAX Utility comes with features including how to specify a folder to save the faxes. Install the FAX Utility before using this feature.

Note:

❏ *Check if the FAX Utility and the printer's PC-FAX driver have been installed and the FAX Utility settings have been made before using this feature.*

"Application for Configuring Fax Operations and Sending Faxes (FAX Utility)" on page 181

"Application for Sending Faxes (PC-FAX Driver)" on page 181

❏ *If the FAX Utility is not installed, install the FAX Utility using the EPSON Software Updater (application for updating software).*

Important:

❏ *To receive faxes on a computer, the **Receive Mode** on the printer's control panel must be set to **Auto**.*

❏ *The computer set to receive faxes should always be on. Received documents are saved in the printer's memory temporarily before the documents are saved on the computer. If you turn off the computer, the printer's memory might become full as it cannot send the documents to the computer.*

❏ *The number of documents that have been temporarily saved to the printer's memory are displayed on the*  *on the home screen.*

❏ *To read the received faxes, you need to install a PDF viewer such as Adobe Reader in the computer.*

Related Information

➡ "Setting Receive Mode" on page 81

➡ "Application for Updating Software and Firmware (Epson Software Updater)" on page 183

➡ "Installing the Latest Applications" on page 184

Saving Incoming Faxes on a Computer

You can make settings to save incoming faxes on a computer by using the FAX Utility. Install the FAX Utility on the computer in advance.

For details, see Basic Operations in the FAX Utility help (displayed on the main window). If the password entry screen is displayed on the computer screen while you are making settings, enter the password.

Note:

You can receive faxes on a computer and print from the printer at the same time. See "Related Information" below to make settings.

Related Information

➡ "Making Save to Computer Setting to Also Print on the Printer to Receive Faxes" on page 85

➡ "Application for Configuring Fax Operations and Sending Faxes (FAX Utility)" on page 181

Canceling the Feature that Saves Incoming Faxes to the Computer

You can cancel saving faxes to the computer by using the FAX Utility.

For details, see Basic Operations in the FAX Utility help (displayed on the main window).

Note:

❏ *If there are any faxes that have not been saved to the computer, you cannot cancel the feature that saves faxes on the computer.*

❏ *You can also change the settings on the printer. See "Related Information" below to change settings.*

Related Information

➡ "Making Save to Computer Setting not to Receive Faxes" on page 85

➡ "Application for Configuring Fax Operations and Sending Faxes (FAX Utility)" on page 181

Checking for New Faxes (Windows)

By setting up a computer to save faxes received by the printer, you can check the processing status of received faxes, and whether or not there are any new faxes using the fax icon on the Windows task bar. By setting up the computer to display a notification when new faxes are received, a notification screen pops up near the Windows system tray, and you can check the new faxes.

Note:

❏ *Received fax data saved to the computer is removed from the printer's memory.*

❏ *You need Adobe Reader to view the received faxes because they are saved as PDF files.*

Using the Fax Icon on the Task Bar (Windows)

You can check for new faxes and the operation status by using the fax icon displayed on the Windows taskbar.

1. Check the icon.

   ❏ : Standing by.

   ❏ : Checking for new faxes.

   ❏ : Importing new faxes is complete.

2. Right-click the icon, and then click **View Receiving Fax Record**.

   The **Receiving Fax Record** screen is displayed.

3. Check the date and the sender in the list, and then open the received file as a PDF.

   Note:

   ❏ *Received faxes are automatically renamed using the following naming format.*

   YYYYMMDDHHMMSS_xxxxxxxxxx_nnnnn (Year/Month/Day/Hour/Minute/Second_sender's number)

   ❏ *You can also open the received fax folder directly when you right-click the icon. For details, see **Optional Settings** in the FAX Utility and its help (displayed on the main window).*

While the fax icon indicates that it is standing by, you can check for new faxes instantly by selecting **Check new faxes now**.

Using the Notification Window (Windows)

When you set to notify you the new faxes exist, a notification window is displayed near the task bar for each the fax.

1. Check the notification screen displayed on your computer screen.

   Note:
   The notification screen disappears if no operation is performed for a given length of time. You can change the notification settings such as the display time.

2. Click anywhere in the notification screen, except for the  button.

   The **Receiving Fax Record** screen is displayed.

3. Check the date and the sender in the list, and then open the received file as a PDF.

   Note:
   ❏ *Received faxes are automatically renamed using the following naming format.*

   YYYYMMDDHHMMSS_xxxxxxxxxx_nnnnn (Year/Month/Day/Hour/Minute/Second_sender's number)

   ❏ *You can also open the received fax folder directly when you right-click the icon. For details, see **Optional Settings** in the FAX Utility and its help (displayed on the main window).*

Checking for New Faxes (Mac OS)

You can check for new faxes using one of the following methods. This is available only on computers set to **"Save" (save faxes on this computer)**.

❏ Open the received fax folder (specified in **Received Fax Output Settings.**)

❏ Open the Fax Receive Monitor and click **Check new faxes now**.

❏ Notification that new faxes have been received

Select the **Notify me of new faxes via a dock icon** in the **Fax Receive Monitor** > **Preferences** in the FAX Utility, the fax receive monitor icon on the Dock jumps to notify you that new faxes have arrived.

Open the Received Fax Folder from Received Fax Monitor (Mac OS)

You can open the save folder from the computer specified to receive faxes when selecting **"Save" (save faxes on this computer)**.

1. Click the received fax monitor icon on the Dock to open **Fax Receive Monitor**.

2. Select the printer and click **Open folder**, or double click the printer name.

3. Check the date and the sender in the file name, and then open the PDF file.

   Note:
   Received faxes are automatically renamed using the following naming format.

   YYYYMMDDHHMMSS_xxxxxxxxxx_nnnnn (Year/Month/Day/Hour/Minute/Second_sender's number)

   Information sent from the sender is displayed as the sender's number. This number may not be displayed depending on the sender.

Replacing Ink Cartridges and Other Consumables

Checking the Status of the Remaining Ink and the Maintenance Box

You can check the approximate ink levels and the approximate service life of the maintenance box from the control panel or the computer.

Note:
You can continue printing while the ink low message is displayed. Replace the ink cartridges when required.

Checking the Status of the Remaining Ink and the Maintenance Box - Control Panel

Select on the home screen.

Checking the Status of the Remaining Ink and the Maintenance Box - Windows

1. Access the printer driver window.
2. Click **EPSON Status Monitor 3** on the **Maintenance** tab.

   Note:
   *If **EPSON Status Monitor 3** is disabled, click **Extended Settings** on the **Maintenance** tab, and then select **Enable EPSON Status Monitor 3**.*

Related Information

➡ "Accessing the Printer Driver" on page 90

Checking the Status of the Remaining Ink and the Maintenance Box - Mac OS X

1. Start the printer driver utility:

   ❏ Mac OS X v10.6.x to v10.9.x

   Select **System Preferences** from the menu > **Printers & Scanners** (or **Print & Scan**, **Print & Fax**) and then select the printer. Click **Options & Supplies** > **Utility** > **Open Printer Utility**.

❏ Mac OS X v10.5.8

Select **System Preferences** from the menu > **Print & Fax**, and then select the printer. Click **Open Print Queue** > **Utility**.

2. Click **EPSON Status Monitor**.

Ink Cartridge Codes

The following are the codes for genuine Epson ink cartridges.

Note:

❏ *Ink cartridge codes may vary by location. For the correct codes in your area,contact Epson support.*

❏ *Although the ink cartridges may contain recycled materials, this does not affect printer function or performance.*

❏ *Specifications and appearance of the ink cartridge are subject to change without prior notice for improvement.*

For Europe

Icon	BK: Black	C: Cyan	M: Magenta	Y: Yellow
Starfish 	603 603XL*	603 603XL*	603 603XL*	603 603XL*

* "XL" indicates a large cartridge.

Note:

For users in Europe, visit the following website for information on Epson's ink cartridge yields.

http://www.epson.eu/pageyield

Epson recommends the use of genuine Epson ink cartridges. Epson cannot guarantee the quality or reliability of non-genuine ink. The use of non-genuine ink may cause damage that is not covered by Epson's warranties, and under certain circumstances, may cause erratic printer behavior. Information about non-genuine ink levels may not be displayed.

Related Information

➡ "Technical Support Web Site" on page 236

Ink Cartridge Handling Precautions

Read the following instructions before replacing ink cartridges.

Storing precautions for ink

❏ Keep the ink cartridges out of direct sunlight.

❏ Do not store the ink cartridges in high or freezing temperatures.

❏ For best results, Epson recommends using up ink cartridges before the best before date printed on the package, or within six months of opening the package, whichever is earlier.

❏ For best results, store ink cartridge packages with their bottom down.

❏ After bringing an ink cartridge inside from a cold storage site, allow it to warm up at room temperature for at least three hours before using it.

❏ Do not open the ink cartridge package until you are ready to install it in the printer. The cartridge is vacuum packed to maintain its reliability. If you leave a cartridge unpacked for a long time before using it, normal printing may not be possible.

Handling precautions for replacing ink cartridges

❏ Be careful not to break the hooks on the side of the ink cartridge when you remove it from the package.

❏ Do not shake cartridges after opening the package, as they may leak.

❏ You must remove the yellow tape from the cartridge before installing it; otherwise, print quality may decline or you may not be able to print. Do not remove or tear the label on the cartridge; this can cause leakage.



❏ Do not remove the transparent seal from the bottom of the cartridge; otherwise, the cartridge may become unusable.

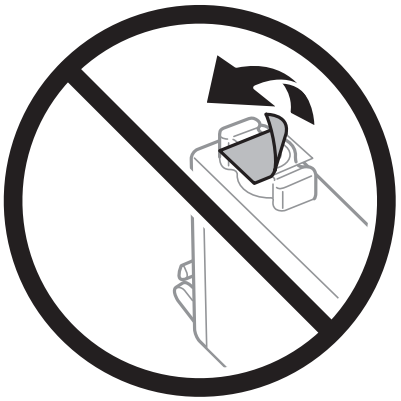

❏ Do not touch the sections shown in the illustration. Doing so may prevent normal operation and printing.

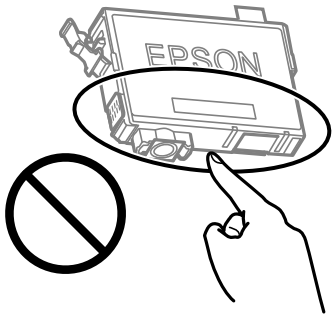

❏ Install all ink cartridges; otherwise you cannot print.

❏ Do not replace ink cartridges with the power off. Do not move the print head by hand; otherwise, you may damage the printer.

❏ Do not turn off the printer during ink charging. If the ink charging is incomplete, you may not be able to print.

❏ Do not leave the printer with the ink cartridges removed or do not turn off the printer during cartridge replacement. Otherwise, ink remaining in the print head nozzles will dry out and you may not be able to print.

❏ If you need to remove an ink cartridge temporarily, make sure you protect the ink supply area from dirt and dust. Store the ink cartridge in the same environment as the printer, with the ink supply port facing down or sideways. Do not store ink cartridges with the ink supply port facing up. Because the ink supply port is equipped with a valve designed to contain the release of excess ink, there is no need to supply your own covers or plugs.

❏ Removed ink cartridges may have ink around the ink supply port, so be careful not to get any ink on the surrounding area when removing the cartridges.

❏ This printer uses ink cartridges equipped with a green chip that monitors information such as the amount of remaining ink for each cartridge. This means that even if the cartridge is removed from the printer before it is expended, you can still use the cartridge after reinserting it back into the printer. However, when reinserting a cartridge, some ink may be consumed to guarantee printer performance.

❏ For maximum ink efficiency, only remove an ink cartridge when you are ready to replace it. Ink cartridges with low ink status may not be used when reinserted.

❏ To ensure you receive premium print quality and to help protect your print head, a variable ink safety reserve remains in the cartridge when your printer indicates to replace the cartridge. The yields quoted for you do not include this reserve.

❏ Do not disassemble or remodel the ink cartridge, otherwise you may not be able to print normally.

❏ You cannot use the cartridges that came with the printer for the replacement.

Ink consumption

❏ To maintain optimum print head performance, some ink is consumed from all cartridges during maintenance operations. Ink may also be consumed when you replace ink cartridge or turn the printer on.

❏ When printing in monochrome or grayscale, color inks instead of black ink may be used depending on the paper type or print quality settings. This is because a mixture of color inks is used to create black.

❏ The ink in the ink cartridges supplied with your printer is partly used during initial setup. In order to produce high quality printouts, the print head in your printer will be fully charged with ink. This one-off process consumes a quantity of ink and therefore these cartridges may print fewer pages compared to subsequent ink cartridges.

❏ Quoted yields may vary depending on the images that you are printing, the paper type that you are using, the frequency of your prints and environmental conditions such as temperature.

Replacing Ink Cartridges

> ⚠ ***Caution:***
> *Be careful not to trap your hand or fingers when opening or closing the scanner unit. Otherwise you may be injured.*

Do one of the following.

To select an item, use the ▲▼◀▶ buttons, and then press the OK button.

❏ When prompted to replace ink cartridges

Check which ink cartridge needs to be replaced, and then press the OK button. Confirm the message, select **Yes, replace now** on the home screen.

Select **How To** and then view the animations displayed on the control panel to learn how to replace the ink cartridges.

❏ When replacing ink cartridges before they are expended

Select **Maintenance** > **Ink Cartridge Replacement** on the home screen.

Select **How To** and then view the animations displayed on the control panel to learn how to replace the ink cartridges.

Related Information

➡ "Ink Cartridge Codes" on page 159
➡ "Ink Cartridge Handling Precautions" on page 159

Maintenance Box Code

Epson recommends the use of a genuine Epson maintenance box.

Maintenance box code: C9344

> ***Important:***
> *Once a maintenance box has been installed in a printer it cannot be used with other printers.*

Maintenance Box Handling Precautions

Read the following instructions before replacing the maintenance box.

❏ Do not touch the sections shown in the illustration. Doing so may prevent normal operation and you may get smeared with ink.

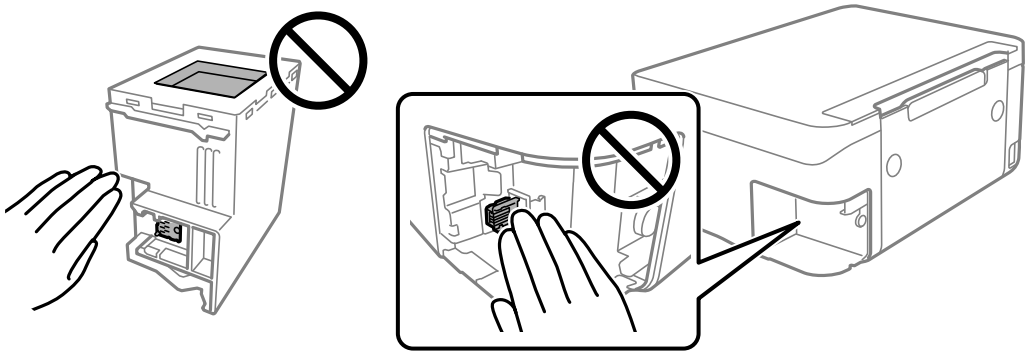

❏ Do not drop the maintenance box or subject it to strong shocks.

❏ Do not replace the maintenance box during printing; otherwise, ink may leak.

❏ Do not remove the maintenance box and its cover except when replacing the maintenance box; otherwise ink may leak.

❏ When the cover cannot be reattached, the maintenance box may not be installed correctly. Remove the maintenance box, and re-install it.

❏ Do not tilt the used maintenance box until after it is sealed in the plastic bag; otherwise ink may leak.

❏ Do not touch the openings in the maintenance box as you may get smeared with ink.

❏ Do not reuse a maintenance box which has been removed and left detached for a long period. Ink inside the box will have solidified and no more ink can be absorbed.

❏ Keep the maintenance box out of direct sunlight.

❏ Do not store the maintenance box in high or freezing temperatures.

Replacing a Maintenance Box

In some print cycles a very small amount of surplus ink may be collected in the maintenance box. To prevent ink leakage from the maintenance box, the printer is designed to stop printing when the absorbing capacity of the maintenance box has reached its limit. Whether and how often this is required will vary according to the number of pages you print, the type of material that you print and the number of cleaning cycles that the printer performs.

When a message is displayed prompting you to replace the maintenance box, refer to the animations displayed on the control panel. The need for replacement of the box does not mean that your printer has ceased to operate in accordance with its specifications. The Epson warranty does not cover the cost of this replacement. It is a user-serviceable part.

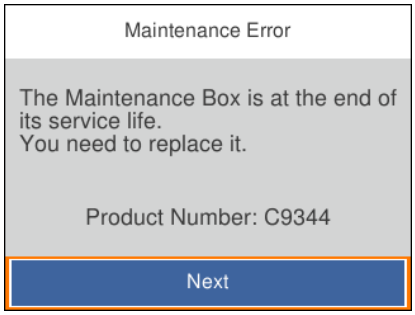

Note:

❏ *When the maintenance box is full, you cannot print and clean the print head until it is replaced to avoid ink leakage. However, you can perform operations that do not use ink such as scanning.*

❏ *When the following screen is displayed, the part cannot be replaced by users. Contact Epson support.*



Related Information

➡ "Maintenance Box Code" on page 162

➡ "Maintenance Box Handling Precautions" on page 162

Temporarily Printing with Black Ink

When color ink is expended and black ink still remains, you can use the following settings to continue printing for a short time using only black ink.

❏ Type of paper: plain papers, Envelope

❏ Color: B&W or Grayscale

❏ Borderless: Not selected

❏ EPSON Status Monitor 3: Enabled (When printing from the printer driver on Windows.)

Because this feature is only available for approximately five days, replace the expended ink cartridge as soon as possible.

Note:

❏ *If **EPSON Status Monitor 3** is disabled, access the printer driver, click **Extended Settings** on the **Maintenance** tab, and then select **Enable EPSON Status Monitor 3**.*

❏ *The available period varies depending on the usage conditions.*

Temporarily Printing with Black Ink - Control Panel

1. When a message is displayed prompting you to replace the ink cartridges, select **Next**.

   A message is displayed telling you that you can temporarily print with black ink.

2. Check the message, and then select **Dismiss**.

3. If you want to print in monochrome, select **No, remind me later**.

   The ongoing job is canceled.

4. Now you can copy originals on plain paper in monochrome. Select the feature you want to use on the home screen.

   Note:
   Borderless copying is not available.

Temporarily Printing with Black Ink - Windows

Do one of the following.

❏ When the following window is displayed, select **Print in Black**.

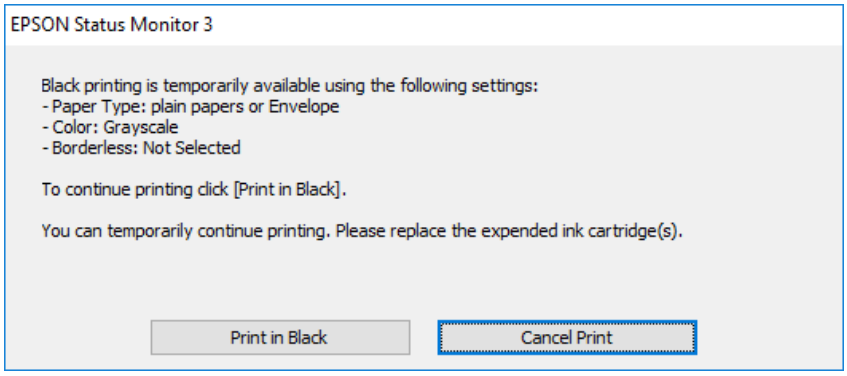

❏ When the following window is displayed, cancel printing. And then, printing again.

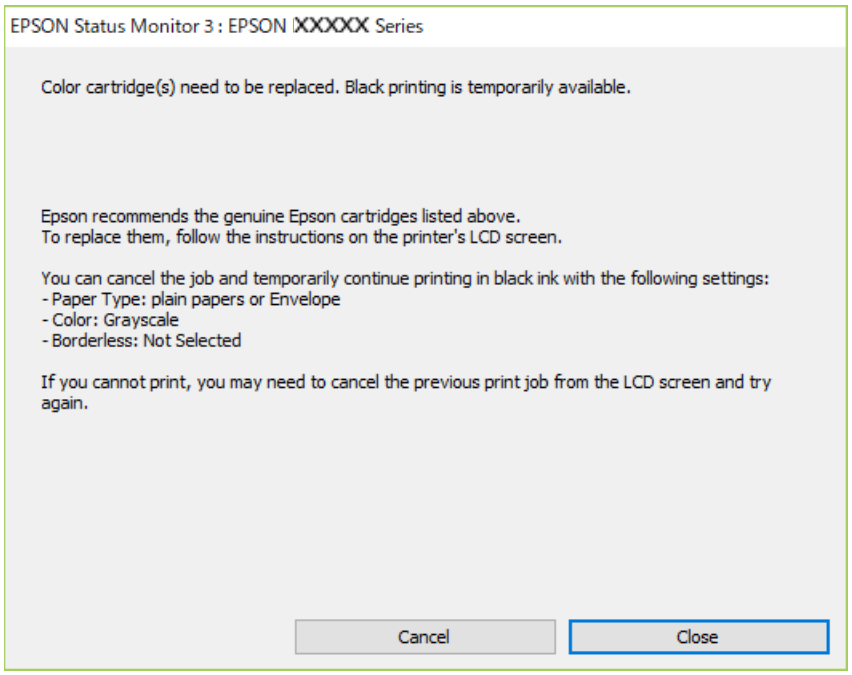

Note:
If you cannot cancel printing from the computer, cancel using the printer's control panel.

Follow the steps below when printing again.

1. Access the printer driver window.

2. Clear **Borderless** on the **Main** tab.
3. Select **plain papers** or **Envelope** as the **Paper Type** setting on the **Main** tab.
4. Select **Grayscale**.
5. Set the other items on the **Main** and **More Options** tabs as necessary, and then click **OK**.
6. Click **Print**.
7. Click **Print in Black** in the window displayed.

Related Information

➡ "Canceling" on page 106
➡ "Loading Paper in the Rear Paper Feed" on page 57
➡ "Printing Basics" on page 90

Temporarily Printing with Black Ink - Mac OS

Note:
*To use this feature through a network, connect with **Bonjour**.*

1. Click the printer icon in the **Dock**.
2. Cancel the job.

   Note:
   If you cannot cancel printing from the computer, cancel using the printer's control panel.

3. Select **System Preferences** from the menu > **Printers & Scanners** (or **Print & Scan**, **Print & Fax**), and then select the printer. Click **Options & Supplies** > **Options** (or **Driver**).
4. Select **On** as the **Permit temporary black printing** setting.
5. Access the print dialog.
6. Select **Print Settings** from the pop-up menu.
7. Select any paper size except for a borderless size as the **Paper Size** setting.
8. Select **plain papers** or **Envelope** as the **Media Type** setting.
9. Select **Grayscale**.
10. Set the other items as necessary.
11. Click **Print**.

Related Information

➡ "Canceling Printing" on page 106
➡ "Loading Paper in the Rear Paper Feed" on page 57

➡ "Printing Basics" on page 108

Conserving Black Ink when the Black Ink Is Low (for Windows Only)

When black ink is running low and there is enough color ink remaining, you can use a mixture of color inks to create black. You can continue printing while preparing a replacement black ink cartridge.

This feature is only available when you select the following settings in the printer driver.

❏ Paper Type: **plain papers**

❏ Quality: **Standard**

❏ EPSON Status Monitor 3: Enabled

Note:

❏ *If **EPSON Status Monitor 3** is disabled, access the printer driver, click **Extended Settings** on the **Maintenance** tab, and then select **Enable EPSON Status Monitor 3**.*

❏ *Composite black looks slightly different from pure black. In addition, the print speed is reduced.*

❏ *To maintain the quality of the print head, black ink is also consumed.*

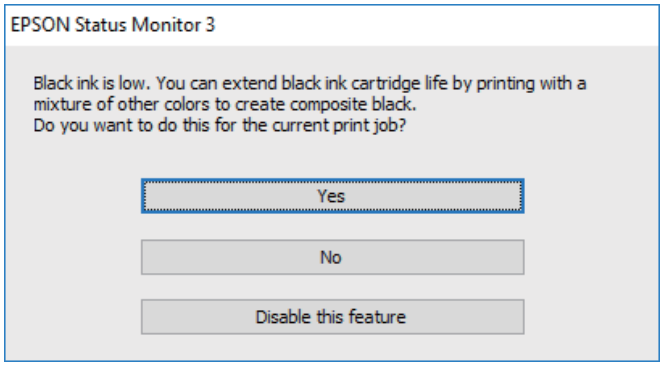

Options	Description
Yes	Select to use a mixture of color inks to create black. This window is displayed the next time you print a similar job.
No	Select to continue using the remaining black ink. This window is displayed the next time you print a similar job.
Disable this feature	Select to continue using the remaining black ink. This window is not displayed until you replace the black ink cartridge and it runs low again.

Maintaining the Printer

Preventing the Print Head from Drying

Always use the power button when turning the printer on and off.

Check that the power light is off before you disconnect the power cord.

The ink itself can dry out if it is not covered. Just like placing a cap on a fountain pen or an oil pen to prevent it from drying, make sure the print head is capped properly to prevent the ink from drying.

When the power cord is unplugged or a power outage occurs while the printer is in operation, the print head may not be capped properly. If the print head is left as it is, it will dry out causing nozzles (ink outlets) to clog.

In these cases, turn the printer on and off again as soon as possible to cap the print head.

Checking and Cleaning the Print Head

If the nozzles are clogged, the printouts become faint, there is visible banding, or unexpected colors appear. When print quality has declined, use the nozzle check feature and check if the nozzles are clogged. If the nozzles are clogged, clean the print head.

Important:

- ❏ *Do not open the scanner unit or turn off the printer during head cleaning. If the head cleaning is incomplete, you may not be able to print.*
- ❏ *Head cleaning consumes ink and should not be performed more than necessary.*
- ❏ *When ink is low, you may not be able to clean the print head.*
- ❏ *If print quality has not improved after repeating nozzle check and head cleaning about four times, wait for at least six hours without printing, and then run the nozzle check again and repeat the head cleaning if necessary. We recommend to turn off the printer. If print quality has still not improved, contact Epson support.*
- ❏ *To prevent the print head from drying out, do not unplug the printer while the power is on.*

Checking and Cleaning the Print Head - Control Panel

1. Load A4-size plain paper in the printer.
2. Select **Maintenance** on the home screen.

   To select an item, use the ▲▼◀▶ buttons, and then press the OK button.
3. Select **Print Head Nozzle Check**.
4. Follow the on-screen instructions to print the nozzle check pattern.

5. Examine the printed pattern. If there are broken lines or missing segments as shown in the "NG" pattern, the print head nozzles may be clogged. Go to the next step. If you cannot see any broken lines or missing segments as in the following "OK" pattern, the nozzles are not clogged. Select to close the nozzle check feature.

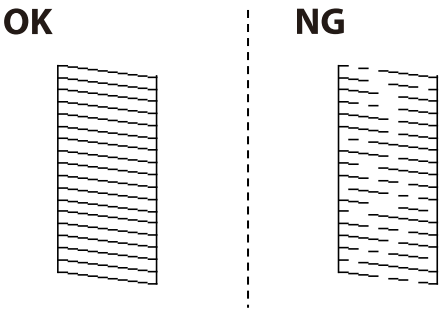

6. Select , and then follow the on-screen instructions to clean the print head.

7. When cleaning is finished, print the nozzle check pattern again. Repeat cleaning and printing the pattern until all lines are printed completely.

Related Information

➡ "Loading Paper in the Rear Paper Feed" on page 57

Checking and Cleaning the Print Head - Windows

1. Load A4-size plain paper in the printer.

2. Access the printer driver window.

3. Click **Nozzle Check** on the **Maintenance** tab.

4. Follow the on-screen instructions.

Related Information

➡ "Loading Paper in the Rear Paper Feed" on page 57
➡ "Accessing the Printer Driver" on page 90

Checking and Cleaning the Print Head - Mac OS

1. Load A4-size plain paper in the printer.

2. Select **System Preferences** from the menu > **Printers & Scanners** (or **Print & Scan**, **Print & Fax**), and then select the printer.

3. Click **Options & Supplies** > **Utility** > **Open Printer Utility**.

4. Click **Nozzle Check**.

5. Follow the on-screen instructions.

Related Information

➡ "Loading Paper in the Rear Paper Feed" on page 57

Aligning the Print Head

If print results contain the following problems, align the print head to improve the printouts.

❏ Vertical lines look misaligned or the printouts look blurry

❏ Horizontal banding occurs at regular intervals

Aligning the Print Head - Control Panel

1. Select **Maintenance** on the home screen.

   To select an item, use the ▲ ▼ ◀ ▶ buttons, and then press the OK button.

2. Select **Print Head Alignment**.

3. Select the adjustment menu you want to adjust to improve the printouts according to the status of the print results.

   ❏ Vertical lines look misaligned or the printouts look blurry : Select **Vertical Alignment**.

   ❏ Horizontal banding occurs at regular intervals: Select **Horizontal Alignment**.

4. Follow the on-screen instructions.

Related Information

➡ "Loading Paper in the Rear Paper Feed" on page 57

Cleaning the Paper Path for Ink Smears

When the printouts are smeared or scuffed, clean the roller inside.

> ***Important:***
> *Do not use tissue paper to clean the inside of the printer. The print head nozzles may be clogged with lint.*

1. Load A4-size plain paper in the printer.

2. Select **Maintenance** on the home screen.

   To select an item, use the ▲ ▼ ◀ ▶ buttons, and then press the OK button.

3. Select **Paper Guide Cleaning**.

4. Follow the on-screen instructions to clean the paper path.

   Note:
   Repeat this procedure until the paper is not smeared with ink.

Related Information

➡ "Loading Paper in the Rear Paper Feed" on page 57

Cleaning the ADF

When the copied or scanned images from the ADF are smeared or the originals do not feed in the ADF correctly, clean the ADF.

> ***Important:***
> *Never use alcohol or thinner to clean the printer. These chemicals can damage the printer.*

1. Open the ADF cover.

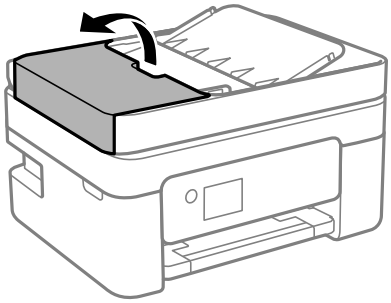

2. Use a soft, moist cloth to clean the roller and the interior of the ADF.

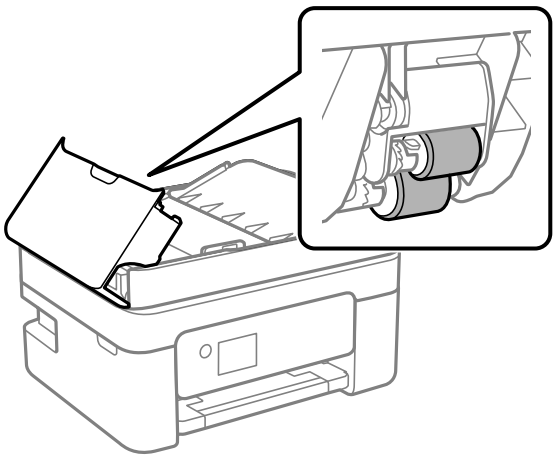

> ***Important:***
> *Using a dry cloth may damage the surface of the roller. Use the ADF after the roller has dried.*

3. Close the ADF cover, and then open the document cover.

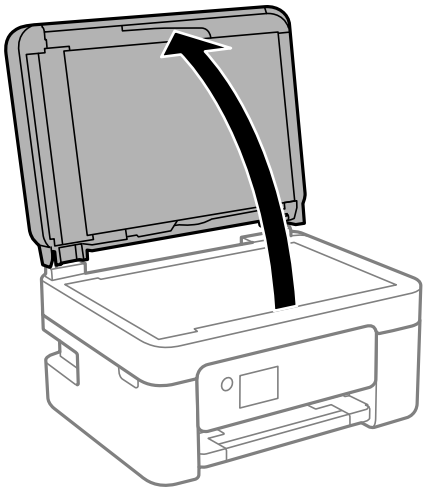

4. Clean the part that is shown in the illustration.

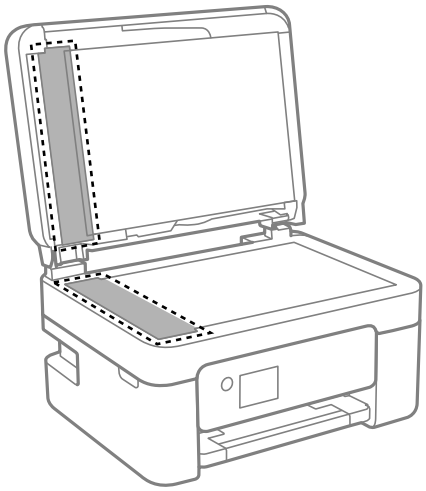

Important:

- ❏ *If the glass surface is stained with grease or some other hard-to-remove material, use a small amount of glass cleaner and a soft cloth to remove it. Wipe off all remaining liquid.*
- ❏ *Do not press the glass surface too hard.*
- ❏ *Be careful not to scratch or damage the surface of the glass. A damaged glass surface can decrease the scan quality.*

5. If the problem cannot be cleared, turn off the printer by pressing the ⏻ button, open the ADF cover, and then raise the ADF input tray.

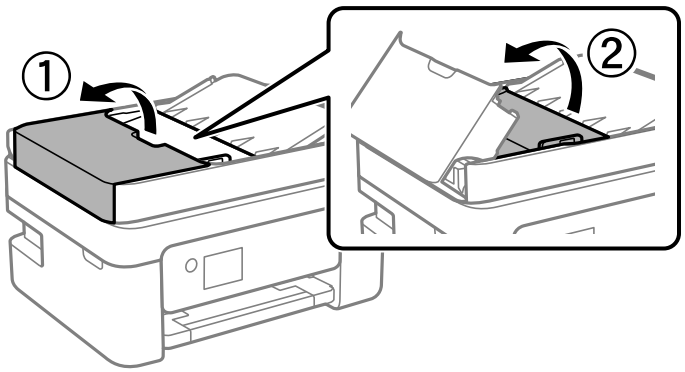

6. Clean the part that is shown in the illustration.

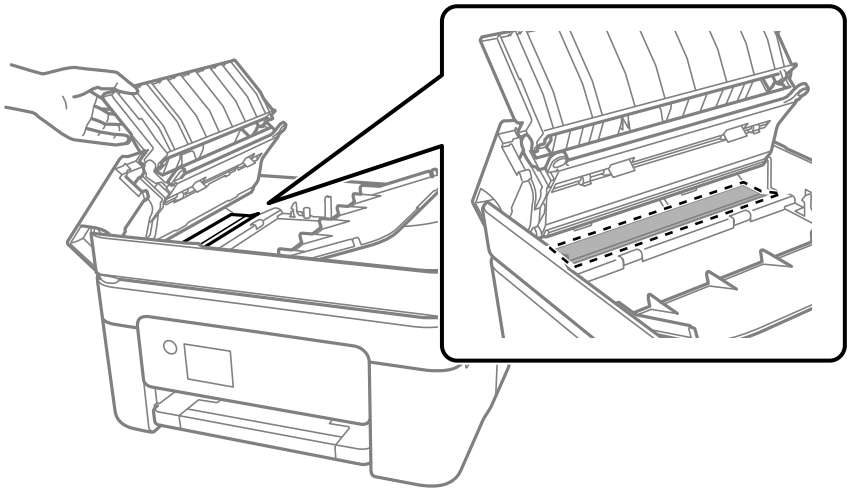

Cleaning the Scanner Glass

When the copies or scanned images are smeared, clean the scanner glass.

> ⚠ ***Caution:***
>
> *Be careful not to trap your hand or fingers when opening or closing the document cover. Otherwise you may be injured.*

> ***Important:***
>
> *Never use alcohol or thinner to clean the printer. These chemicals can damage the printer.*

1. Open the document cover.

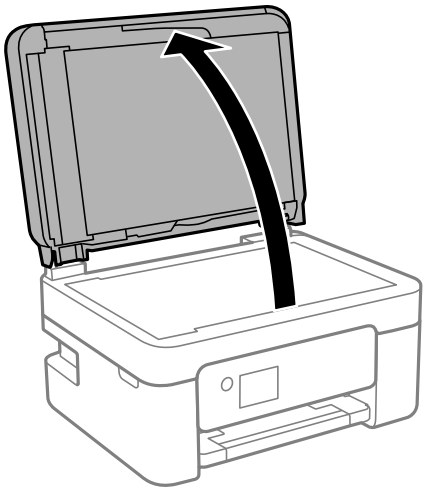

2. Use a soft, dry, clean cloth to clean the surface of the scanner glass.

> ***Important:***
>
> ❏ *If the glass surface is stained with grease or some other hard-to-remove material, use a small amount of glass cleaner and a soft cloth to remove it. Wipe off all remaining liquid.*
>
> ❏ *Do not press the glass surface too hard.*
>
> ❏ *Be careful not to scratch or damage the surface of the glass. A damaged glass surface can decrease the scan quality.*

Cleaning the Translucent Film

When the printout is not improved after aligning the print head or cleaning the paper path, the translucent film inside the printer may be smeared.

Items required:

❏ Cotton swabs (several)

❏ Water with a few drops of detergent (2 to 3 drops of detergent in 1/4 cup of tap water)

❏ Light for checking smears

> ***Important:***
>
> *Do not use cleaning liquid other than water with a few drops of detergent.*

1. Turn off the printer by pressing the ⏻ button.

2. Open the scanner unit.

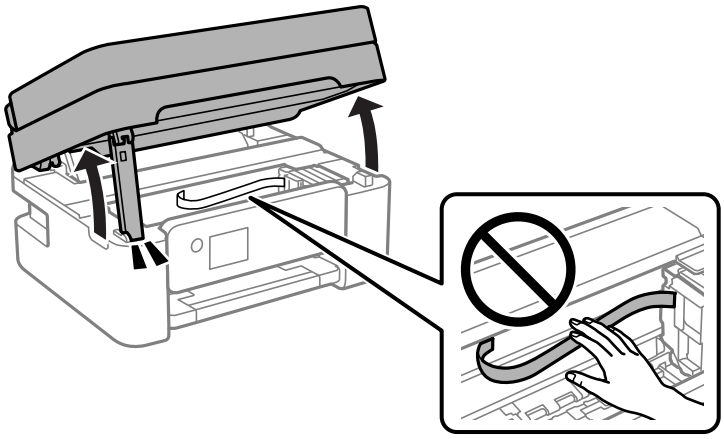

3. Check if the translucent film is smeared. Smears are easier to see if you use a light.

   If there are smears (such as finger marks or grease) on the translucent film (A), go to the next step.

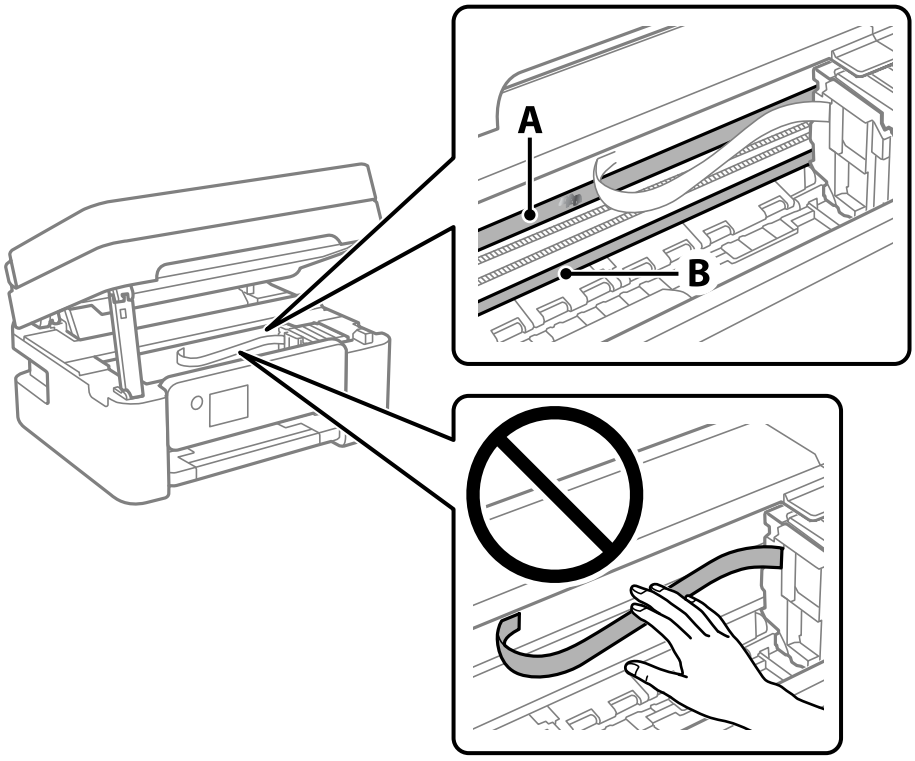

A: Translucent film

B: Rail

> ***Important:***
>
> *Be careful not to touch the rail (B). Otherwise, you may not be able to print. Do not wipe off the grease on the rail, because this is necessary for operations.*

4. Moisten a cotton swab with the water with a few drops of detergent so that it is not dripping water, and then wipe the smeared part.

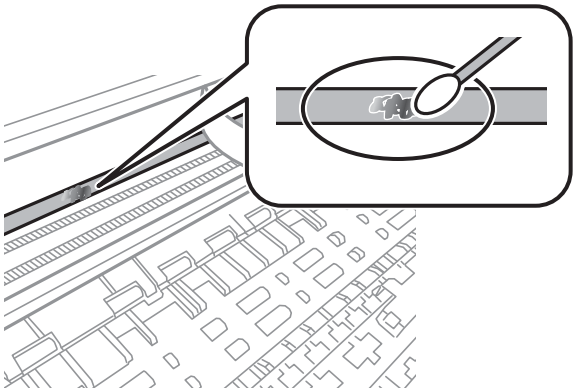

> ***Important:***
>
> *Wipe off the smear gently. If you press the cotton swab too hard to the film, the springs of the film may be dislocated and the printer may be damaged.*

5. Use a new dry cotton swab to wipe the film.

> ***Important:***
>
> *Do not leave any fibers on the film.*

Note:
To prevent the smear from spreading, frequently replace the cotton swab with a new one.

6. Repeat steps 4 and 5 until the film is not smeared.

7. Visually check that the film is not smeared.

Network Service and Software Information

This section introduces the network services and software products available for your printer from the Epson website.

Application for Configuring Printer Operations (Web Config)

Web Config is an application that runs in a web browser, such as Microsoft Edge and Safari, on a computer or smart device. You can confirm the printer status or change the network service and printer settings. To use the Web Config, connect the printer and the computer or device to the same network.

The following browsers are supported. Use the latest version.

Microsoft Edge, Internet Explorer, Firefox, Chrome, Safari

Note:
You may be asked to enter the administrator password while operating Web Config. See the related information below for more details.

Related Information

➡ "Default Value of the Administrator Password" on page 12

Running Web Config on a Web Browser

1. Check the printer's IP address.

   Select the network icon on the printer's home screen, and then select the active connection method to confirm the printer's IP address.

   Note:
   You can also check the IP address by printing the network connection report.

2. Launch a Web browser from a computer or smart device, and then enter the printer's IP address.

   Format:

   IPv4: http://the printer's IP address/

   IPv6: http://[the printer's IP address]/

   Examples:

   IPv4: http://192.168.100.201/

   IPv6: http://[2001:db8::1000:1]/

   Note:
   Using the smart device, you can also run Web Config from the maintenance screen of Epson iPrint.

   Since the printer uses a self-signed certificate when accessing HTTPS, a warning is displayed on the browser when you start Web Config; this does not indicate a problem and can be safely ignored.

Related Information

➡ "Printing a Network Connection Report" on page 42
➡ "Using Epson iPrint" on page 116

Running Web Config on Windows

When connecting a computer to the printer using WSD, follow the steps below to run Web Config.

1. Open the printer list on the computer.
   - ❏ Windows 10

     Click on the start button, and then select **Windows System** > **Control Panel** > **View devices and printers** in **Hardware and Sound**.
   - ❏ Windows 8.1/Windows 8

     Select **Desktop** > **Settings** > **Control Panel** > **View devices and printers** in **Hardware and Sound** (or **Hardware**).
   - ❏ Windows 7

     Click the start button, and select **Control Panel** > **View devices and printers** in **Hardware and Sound**.
   - ❏ Windows Vista

     Click the start button, and select **Control Panel** > **Printers** in **Hardware and Sound**.
2. Right-click on your printer and select **Properties**.
3. Select the **Web Service** tab and click the URL.

   Since the printer uses a self-signed certificate when accessing HTTPS, a warning is displayed on the browser when you start Web Config; this does not indicate a problem and can be safely ignored.

Running Web Config on Mac OS

1. Select **System Preferences** from the Apple menu > **Printers & Scanners** (or **Print & Scan**, **Print & Fax**), and then select the printer.
2. Click **Options & Supplies**> **Show Printer Webpage**.

   Since the printer uses a self-signed certificate when accessing HTTPS, a warning is displayed on the browser when you start Web Config; this does not indicate a problem and can be safely ignored.

Application for Scanning Documents and Images (Epson Scan 2)

Epson Scan 2 is an application for controlling scanning. You can adjust the size, resolution, brightness, contrast, and quality of the scanned image. You can also start Epson Scan 2 from a TWAIN-compliant scanning application. See the application's help for details.

Starting on Windows

Note:
*For Windows Server operating systems, make sure the **Desktop Experience** feature is installed.*

❏ Windows 10/Windows Server 2016

Click the start button, and then select **EPSON** > **Epson Scan 2**.

❏ Windows 8.1/Windows 8/Windows Server 2012 R2/Windows Server 2012

Enter the application name in the search charm, and then select the displayed icon.

❏ Windows 7/Windows Vista/Windows XP/Windows Server 2008 R2/Windows Server 2008/Windows Server 2003 R2/Windows Server 2003

Click the start button, and then select **All Programs** or **Programs** > **EPSON** > **Epson Scan 2**> **Epson Scan 2**.

Starting on Mac OS

Note:
Epson Scan 2 does not support the Mac OS fast user switching feature. Turn off fast user switching.

Select **Go** > **Applications** > **Epson Software** > **Epson Scan 2**.

Related Information

➡ "Scanning Using Epson Scan 2" on page 132
➡ "Installing the Latest Applications" on page 184

Adding the Network Scanner

Before using Epson Scan 2, you need to add the network scanner.

1. Start the software, and then click **Add** on the **Scanner Settings** screen.

   Note:
   ❏ *If **Add** is grayed out, click **Enable Editing**.*
   ❏ *If the main screen of Epson Scan 2 is displayed, it has already been connected to the scanner. If you want to connect to another network, select **Scanner** > **Settings** to open the **Scanner Settings** screen.*

2. Add the network scanner. Enter the following items, and then click **Add**.
   ❏ **Model**: Select the scanner you want to connect to.
   ❏ **Name**: Enter the scanner name within 32 characters.
   ❏ **Search for Network**: When the computer and the scanner are on the same network, the IP address is displayed. If it is not displayed, click the button. If the IP address is still not displayed, click **Enter address**, and then enter the IP address directly.

3. Select the scanner on the **Scanner Settings**screen, and then click **OK**.

Application for Configuring Scanning Operations from the Control Panel (Epson Event Manager)

Epson Event Manager is an application that allows you to manage scanning from the control panel and save images to a computer. You can add your own settings as presets, such as the document type, the save folder location, and the image format. See the application's help for details.

Note:
Windows Server operating systems are not supported.

Starting on Windows

❏ Windows 10

Click the start button, and then select **Epson Software** > **Event Manager**.

❏ Windows 8.1/Windows 8

Enter the application name in the search charm, and then select the displayed icon.

❏ Windows 7/Windows Vista/Windows XP

Click the start button, and then select **All Programs** or **Programs** > **Epson Software** > **Event Manager**.

Starting on Mac OS

Go > **Applications** > **Epson Software** > **Event Manager**.

Related Information

➡ "Installing the Latest Applications" on page 184

Application for Scanning from a Computer (Epson ScanSmart)

This application allows you to scan documents and photos easily, and then save the scanned images in simple steps.

See the Epson ScanSmart help for details on using the features.

Starting on Windows

❏ Windows 10

Click the start button, and then select **Epson Software** > **Epson ScanSmart**.

❏ Windows 8.1/Windows 8

Enter the application name in the search charm, and then select the displayed icon.

❏ Windows 7

Click the start button, and then select **All Programs** > **Epson Software** > **Epson ScanSmart**.

Starting on Mac OS

Select **Go** > **Applications** > **Epson Software** > **Epson ScanSmart**.

Application for Configuring Fax Operations and Sending Faxes (FAX Utility)

FAX Utility is an application that allows you to configure various settings for sending faxes from a computer. You can create or edit the contacts list to be used when sending a fax, configure to save received faxes in PDF format on the computer, and so on. See the application's help for details.

Note:

❏ *Windows Server operating systems are not supported.*

❏ *Make sure you have installed the printer driver before installing FAX Utility.*

Starting on Windows

❏ Windows 10

Click the start button, and select **Epson Software** > **FAX Utility**.

❏ Windows 8.1/Windows 8

Enter the application name in the search charm, and then select the displayed icon.

❏ Windows 7/Windows Vista/Windows XP

Click the start button, and select **All Programs** (or **Programs**) > **Epson Software** > **FAX Utility**.

Starting on Mac OS

Select **System Preferences** from the menu > **Printers & Scanners** (or **Print & Scan**, **Print & Fax**), and then select the printer (FAX). Click **Options & Supplies** > **Utility** > **Open Printer Utility**.

Related Information

➡ "Receiving Faxes on a Computer" on page 155

➡ "Installing the Latest Applications" on page 184

Application for Sending Faxes (PC-FAX Driver)

PC-FAX driver is an application that allows you to send a document created on a separate application as a fax directly from the computer. PC-FAX driver is installed when you install FAX Utility. See the application's help for details.

Note:

❏ *Windows Server operating systems are not supported.*

❏ *The operation differs depending on the application you used to create the document. See the application's help for details.*

Accessing from Windows

In the application, select **Print** or **Print Setup** from the **File** menu. Select your printer (FAX), and then click **Preferences** or **Properties**.

Accessing from Mac OS

In the application, select **Print** from the **File** menu. Select your printer (FAX) as the **Printer** setting, and then select **Fax Settings** or **Recipient Settings** from the pop-up menu.

Related Information

➡ "Sending a Fax from a Computer" on page 150
➡ "Application for Configuring Fax Operations and Sending Faxes (FAX Utility)" on page 181

Application for Quick and Fun Printing from a Computer (Epson Photo+)

Epson Photo+ is an application that allows you to easily print images with a variety of layouts. You can use a variety of templates and perform image correction and adjust the position while viewing a preview of your document. You can also brighten up your images by adding text and stamps wherever you like. When printing on genuine Epson photo paper, the ink performance is maximized creating a beautiful finish with excellent coloring.

It also comes with the following features. See the application's help for details. You can download the latest applications from the Epson website.

http://www.epson.com

❏ Printing disc labels (supported models only)

❏ Printing created QR codes

❏ Printing photos showing the shooting date and time

Note:
❏ *Windows Server operating systems are not supported.*

❏ *To use this application the printer driver for this printer must be installed.*

Starting on Windows

❏ Windows 10

Click the start button, and then select **Epson Software** > **Epson Photo+**.

❏ Windows 8.1/Windows 8

Enter the application name in the search charm, and then select the displayed icon.

❏ Windows 7

Click the start button, and select **All Programs** or **Programs** > **Epson Software** > **Epson Photo+**.

Starting on Mac OS

Select **Go** > **Applications** > **Epson Software** > **Epson Photo+**.

Related Information

➡ "Installing the Latest Applications" on page 184

Application for Easily Operating the Printer from a Smart device (Epson Smart Panel)

Epson Smart Panel is an application that allows you to perform printer operations easily including printing, copying, or scanning from a smart device such as a smartphone or tablet. You can connect the printer and smart

device over a wireless network, check the ink levels and printer status, and check for solutions if an error occurs. You can also copy easily by registering a copy favorite.

Search for and install Epson Smart Panel from App Store or Google Play.



Application for Updating Software and Firmware (Epson Software Updater)

Epson Software Updater is an application that installs new software, and updates firmware over the Internet. If you want to check for update information regularly, you can set the interval for checking for updates in Epson Software Updater's Auto Update Settings.

Note:
Windows Server operating systems are not supported.

Starting on Windows

❏ Windows 10

Click the start button, and then select **EPSON Software** > **Epson Software Updater**.

❏ Windows 8.1/Windows 8

Enter the application name in the search charm, and then select the displayed icon.

❏ Windows 7/Windows Vista/Windows XP

Click the start button, and then select **All Programs** (or **Programs**) > **EPSON Software** > **Epson Software Updater**.

Note:
You can also start Epson Software Updater by clicking the printer icon on the task bar on the desktop, and then selecting ***Software Update****.*

Starting on Mac OS

Select **Go** > **Applications** > **Epson Software** > **Epson Software Updater**.

Application for Setting up the Device on a Network (EpsonNet Config)

EpsonNet Config is an application that allows you to set the network interface addresses and protocols. See the operations guide for EpsonNet Config or the application's help for more details.

Starting on Windows

❏ Windows 10/Windows Server 2019/Windows Server 2016

Click the start button, and then select **EpsonNet** > **EpsonNet Config**.

❏ Windows 8.1/Windows 8/Windows Server 2012 R2/Windows Server 2012

Enter the application name in the search charm, and then select the displayed icon.

❏ Windows 7/Windows Vista/Windows XP/Windows Server 2008 R2/Windows Server 2008/Windows Server 2003 R2/Windows Server 2003

Click the start button, and select **All Programs** or **Programs** > **EpsonNet** > **EpsonNet Config SE** > **EpsonNet Config**.

Starting on Mac OS

Go > **Applications** > **Epson Software** > **EpsonNet** > **EpsonNet Config SE** > **EpsonNet Config**.

Installing the Latest Applications

Note:
When reinstalling an application, you need to uninstall it first.

1. Make sure the printer and the computer are available for communication, and the printer is connected to the Internet.

2. Start EPSON Software Updater.

   The screenshot is an example on Windows.

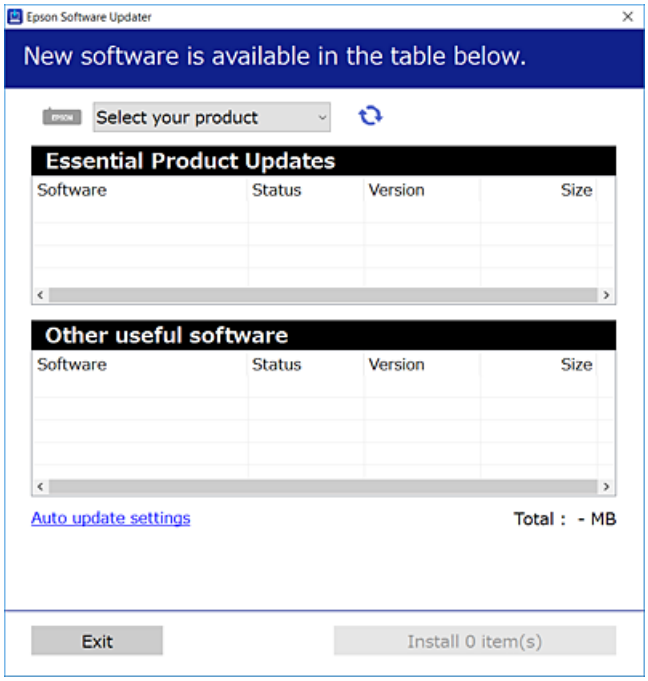

3. For Windows, select your printer, and then click to check for the latest available applications.

4. Select the items you want to install or update, and then click the install button.

> ***Important:***
> *Do not turn off or unplug the printer until the update is complete; otherwise, the printer may malfunction.*

Note:

❏ *You can download the latest applications from the Epson website.*

http://www.epson.com

❏ *If you use Windows Server operating systems, you cannot use EPSON Software Updater. Download the latest applications from the Epson website.*

Related Information

➡ "Application for Updating Software and Firmware (Epson Software Updater)" on page 183

➡ "Uninstalling Applications" on page 185

Adding the Printer (for Mac OS Only)

1. Select **System Preferences** from the Apple menu > **Printers & Scanners** (or **Print & Scan**, **Print & Fax**).
2. Click +, and then select your printer on the screen displayed.
3. Select your printer from **Use**.
4. Click **Add**.

   Note:
   If your printer is not listed, check that it is correctly connected to the computer and that the printer is on.

Updating Applications and Firmware

You may be able to clear certain problems and improve or add functions by updating the applications and the firmware. Make sure you use the latest version of the applications and firmware.

1. Make sure that the printer and the computer are connected, and the computer is connected to the internet.
2. Start EPSON Software Updater, and update the applications or the firmware.

   Important:
   Do not turn off the computer or the printer until the update is complete; otherwise, the printer may malfunction.

   Note:
   If you cannot find the application you want to update in the list, you cannot update using the EPSON Software Updater. Check for the latest versions of the applications from your local Epson website.

   http://www.epson.com

Uninstalling Applications

Log in to your computer as an administrator. Enter the administrator password if the computer prompts you.

Uninstalling Applications - Windows

1. Press the ⏻ button to turn off the printer.
2. Quit all running applications.
3. Open **Control Panel**:
   - ❏ Windows 10/Windows Server 2019/Windows Server 2016
     Click on the start button, and then select **Windows System** > **Control Panel**.
   - ❏ Windows 8.1/Windows 8/Windows Server 2012 R2/Windows Server 2012
     Select **Desktop** > **Settings** > **Control Panel**.
   - ❏ Windows 7/Windows Vista/Windows XP/Windows Server 2008 R2/Windows Server 2008/Windows Server 2003 R2/Windows Server 2003
     Click the start button and select **Control Panel**.
4. Open **Uninstall a program** (or **Add or Remove Programs**):
   - ❏ Windows 10/Windows 8.1/Windows 8/Windows 7/Windows Vista/Windows Server 2019/Windows Server 2016/Windows Server 2012 R2/Windows Server 2012/Windows Server 2008 R2/Windows Server 2008
     Select **Uninstall a program** in **Programs**.
   - ❏ Windows XP/Windows Server 2003 R2/Windows Server 2003
     Click **Add or Remove Programs**.
5. Select the application you want to uninstall.
   You cannot uninstall the printer driver if there is any print jobs. Delete or wait to be printed the jobs before uninstalling.
6. Uninstall the applications:
   - ❏ Windows 10/Windows 8.1/Windows 8/Windows 7/Windows Vista/Windows Server 2019/Windows Server 2016/Windows Server 2012 R2/Windows Server 2012/Windows Server 2008 R2/Windows Server 2008
     Click **Uninstall/Change** or **Uninstall**.
   - ❏ Windows XP/Windows Server 2003 R2/Windows Server 2003
     Click **Change/Remove** or **Remove**.

   Note:
   *If the **User Account Control** window is displayed, click **Continue**.*
7. Follow the on-screen instructions.

Uninstalling Applications - Mac OS

1. Download the Uninstaller using EPSON Software Updater.
   Once you have downloaded the Uninstaller, you do not need to download it again each time you uninstall the application.
2. Press the ⏻ button to turn off the printer.

3. To uninstall the printer driver or PC-FAX driver, select **System Preferences** from the Apple menu > **Printers & Scanners** (or **Print & Scan**, **Print & Fax**), and then remove the printer from the enabled printers list.
4. Quit all running applications.
5. Select **Go** > **Applications** > **Epson Software** > **Uninstaller**.
6. Select the application you want to uninstall, and then click **Uninstall**.

> ***Important:***
> *The Uninstaller removes all drivers for Epson inkjet printers on the computer. If you use multiple Epson inkjet printers and you only want to delete some drivers, delete all of them first, and then install the necessary printer driver again.*

Note:
*If you cannot find the application you want to uninstall in the application list, you cannot uninstall using the Uninstaller. In this situation, select **Go** > **Applications** > **Epson Software**, select the application you want to uninstall, and then drag it to the trash icon.*

Related Information

➡ "Application for Updating Software and Firmware (Epson Software Updater)" on page 183

Printing Using a Network Service

By using Epson Connect service available on the Internet, you can print from your smartphone, tablet PC, or laptop, anytime and practically anywhere. To use this service, you need to register the user and the printer in Epson Connect.

The features available on the Internet are as follows.

❏ Email Print

When you send an email with attachments such as documents or images to an email address assigned to the printer, you can print that email and the attachments from remote locations such as your home or office printer.

❏ Epson iPrint

This Application is for iOS and Android, and allows you to print or scan from a smart phone or tablet. You can print documents, images, and websites by sending them directly to a printer on the same wireless LAN.

❏ Scan to Cloud

This application allows you to send the scanned data you want to print to another printer. You can also upload the scanned data to available Cloud services.

❏ Remote Print Driver

This is a shared driver supported by Remote Print Driver. When printing using a printer in a remote location, you can print by changing the printer on the usual applications window.

See the Epson Connect web portal for details.

https://www.epsonconnect.com/

http://www.epsonconnect.eu (Europe only)

Solving Problems

Checking the Printer Status

Checking Messages on the LCD Screen

If an error message is displayed on the LCD screen, follow the on-screen instructions or the solutions below to solve the problem.

Error Messages	Solutions
Printer Error Turn on the printer again. See your documentation for more details.	Remove any paper or protective material in the printer. If the error message is still displayed, contact Epson support.
You need to replace Ink Cartridge.	To ensure you receive premium print quality and to help protect your print head, a variable ink safety reserve remains in the cartridge when your printer indicates it is time to replace the cartridge. Replace the cartridge when you are prompted to do so.
The printer's borderless printing ink pad is nearing the end of its service life. It is not a user-replaceable part. Please contact Epson support.	Contact Epson or an authorised Epson service provider to replace the borderless printing ink pad*. It is not a user-serviceable part. The message will be displayed until the ink pad is replaced. Select **Dismiss** to resume printing.
The printer's borderless printing ink pad has reached the end of its service life. It is not a user-replaceable part. Please contact Epson support.	Contact Epson or an authorised Epson service provider to replace the borderless printing ink pad*. It is not a user-serviceable part. Borderless printing is not available, but printing with a border is available.
Paper Setup Auto Display is set to Off. Some features may not be available. For details, see your documentation.	If **Paper Setup Auto Display** is disabled, you cannot use AirPrint.
No dial tone is detected.	This problem might be resolved by selecting **Settings** > **General Settings** > **Fax Settings** > **Basic Settings** > **Line Type** and then selecting **PBX**. If your phone system requires an external access code to get an outside line, set the access code after selecting **PBX**. Use # (hash) instead of the actual access code when entering an outside fax number. This makes connection more secure. If the error message is still displayed, set the **Dial Tone Detection** settings to disabled. However, disabling this feature may drop the first digit of a fax number and send the fax to the wrong number.
The combination of the IP address and the subnet mask is invalid. See your documentation for more details.	Enter the correct IP address or default gateway. Contact the person who setup the network for assistance.
To use cloud services, update the root certificate from the Epson Web Config utility.	Run Web Config, and then update the root certificate.

Error Messages	Solutions
Check that the printer driver is installed on the computer and that the port settings for the printer are correct.	Click **Print Queue** on the printer driver's **Maintenance** tab. Make sure the printer port is selected correctly in **Property** > **Port** from the **Printer** menu as follows. Select "**USBXXX**" for a USB connection, or "**EpsonNet Print Port**" for a network connection.
Check that the printer driver is installed on the computer and that the USB port settings for the printer are correct.	
Recovery Mode	The printer has started in recovery mode because the firmware update failed. Follow the steps below to try to update the firmware again. 1. Connect the computer and the printer with a USB cable. (During recovery mode, you cannot update the firmware over a network connection.) 2. Visit your local Epson website for further instructions.

* In some print cycles a very small amount of surplus ink may be collected in the ink pad. To prevent ink leakage from the pad, the product is designed to stop printing when the pad has reached its limit. Whether and how often this is required will vary according to the number of pages you print using the borderless print option. The need for replacement of the pad does not mean that your printer has ceased to operate in accordance with its specifications. The printer will advise you when the pad requires replacing and this can only be performed by an authorised Epson Service provider. The Epson warranty does not cover the cost of this replacement.

Related Information

➡ "Removing Jammed Paper" on page 190
➡ "Contacting Epson Support" on page 237
➡ "Installing the Latest Applications" on page 184

Checking the Printer Status - Windows

1. Access the printer driver window.
2. Click **EPSON Status Monitor 3** on the **Maintenance** tab, and then click **Details**.

   You can check the printer status, ink levels, and error status.

   Note:
   *If **EPSON Status Monitor 3** is disabled, click **Extended Settings** on the **Maintenance** tab, and then select **Enable EPSON Status Monitor 3**.*

Related Information

➡ "Accessing the Printer Driver" on page 90

Checking the Printer Status - Mac OS

1. Select **System Preferences** from the menu > **Printers & Scanners** (or **Print & Scan**, **Print & Fax**), and then select the printer.
2. Click **Options & Supplies** > **Utility** > **Open Printer Utility**.

3. Click **EPSON Status Monitor**.

   You can check the printer status, ink levels, and error status.

Checking the Software Status

You may be able to clear the problem by updating the software to the latest version. To check the software status, use the software update tool.

Related Information

➡ "Application for Updating Software and Firmware (Epson Software Updater)" on page 183

➡ "Installing the Latest Applications" on page 184

Removing Jammed Paper

Check the error displayed on the control panel and follow the instructions to remove the jammed paper including any torn pieces. Next, clear the error.

> ***Important:***
>
> *Remove the jammed paper carefully. Removing the paper vigorously may cause damage to the printer.*

Removing Jammed Paper from the Rear Paper Feed

Remove the jammed paper.

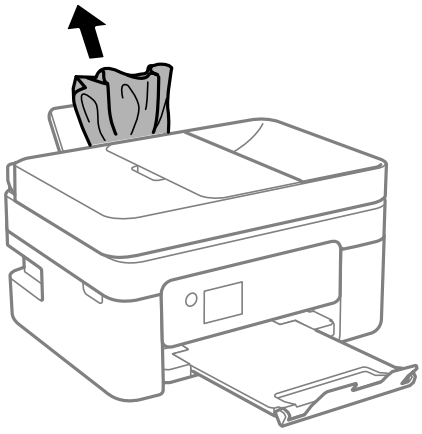

Removing Jammed Paper from Rear Cover

1. Remove the rear cover.

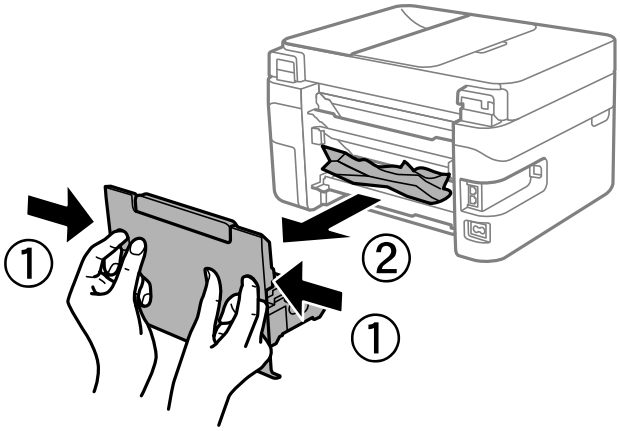

2. Remove the jammed paper.

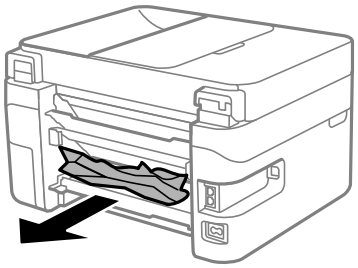

3. Remove jammed paper from the rear cover.

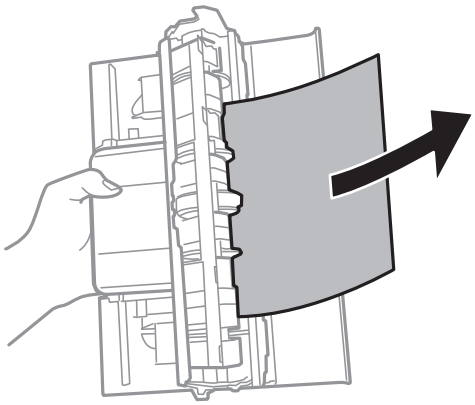

4. Insert the rear cover in the printer.

Removing Jammed Paper from Inside the Printer

> ***Caution:***
>
> ❏ *Be careful not to trap your hand or fingers when opening or closing the scanner unit. Otherwise you may be injured.*
>
> ❏ *Never touch the buttons on the control panel while your hand is inside the printer. If the printer starts operating, it could cause an injury. Be careful not to touch the protruding parts to avoid injury.*

1. Open the scanner unit with the document cover closed.

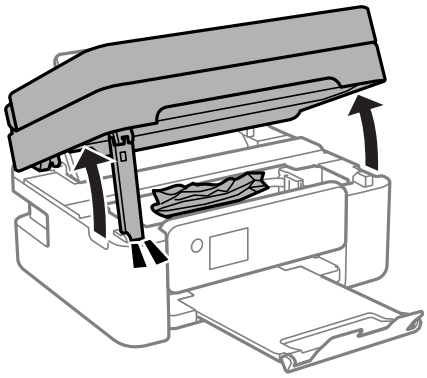

2. Remove the jammed paper.

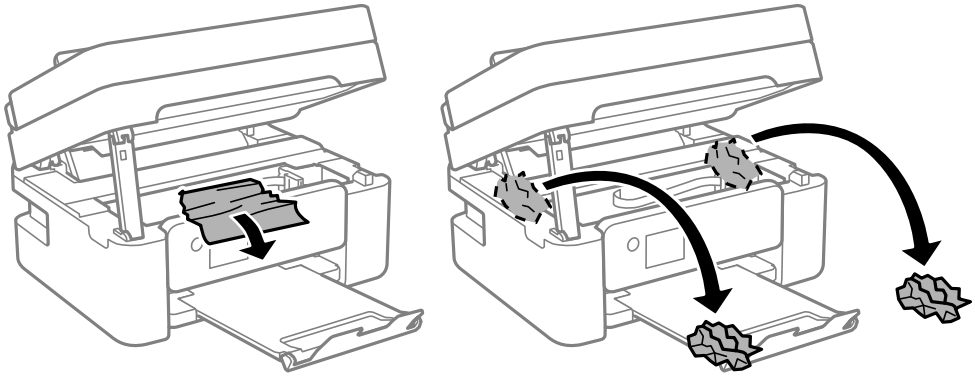

> ***Important:***
>
> *Do not touch the white flat cable or translucent film inside the printer. Doing so may cause a malfunction.*

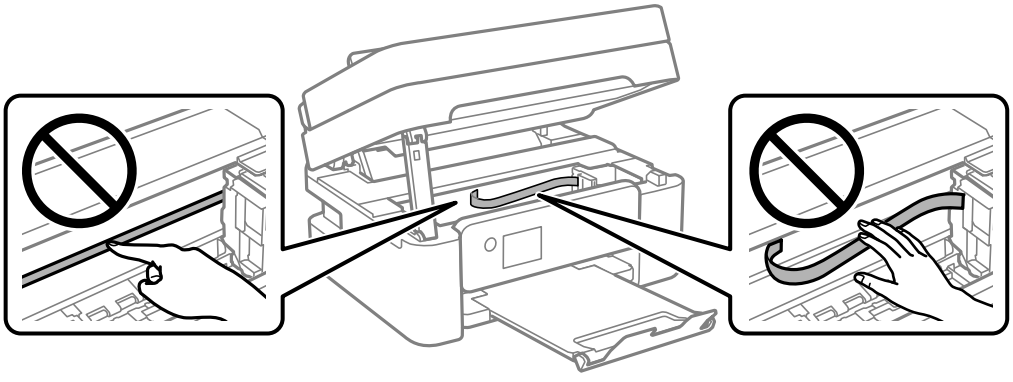

3. Close the scanner unit.

   For safety, the scanner unit is closed in two steps.

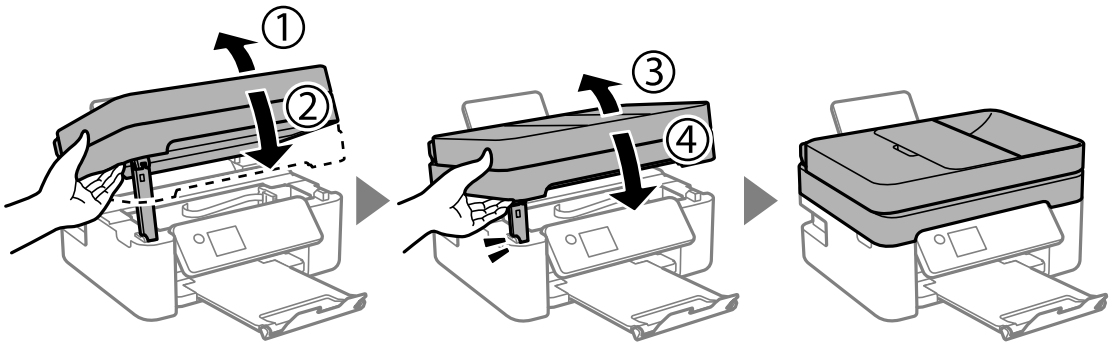

Note:
The scanner unit cannot be opened from the position shown below. Close it completely before opening it.

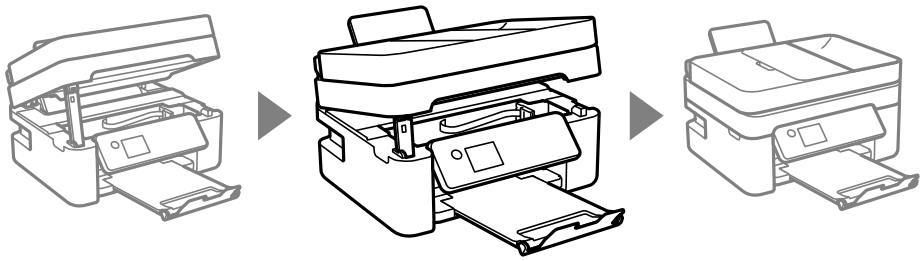

Removing Jammed Paper from the ADF

1. Open the ADF cover.

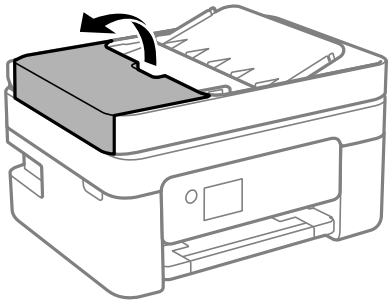

2. Remove the jammed paper.

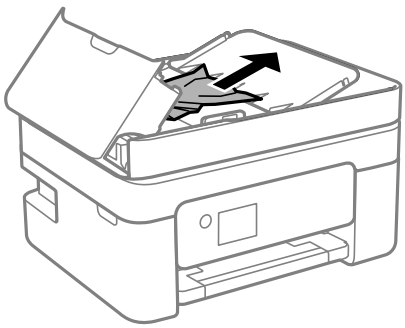

3. Raise the ADF input tray.

> ***Important:***
> *Make sure that you open the ADF cover before raising the ADF input tray. Otherwise, the ADF may be damaged.*

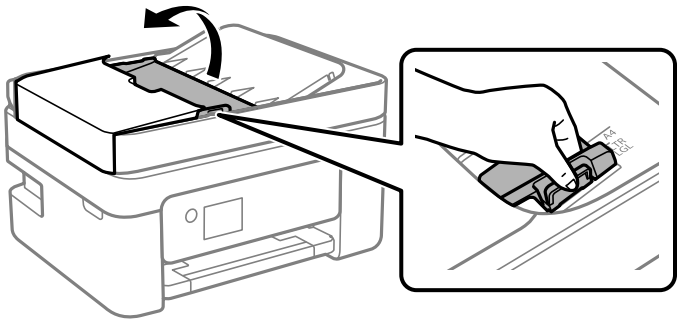

4. Remove the jammed paper.

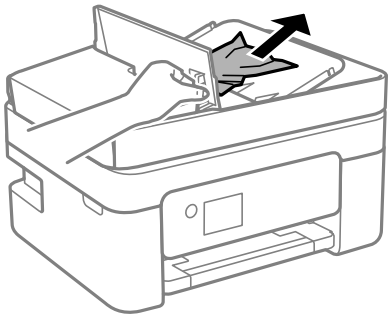

5. Lower the ADF input tray.

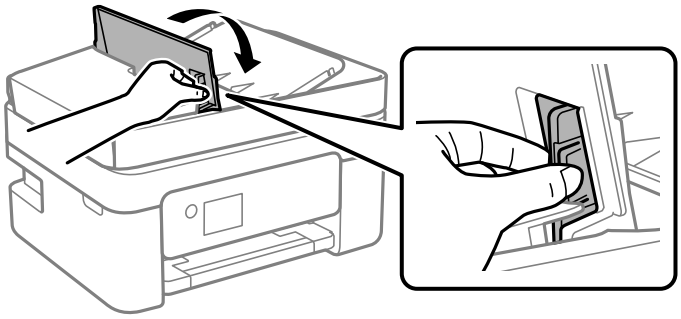

6. Close the ADF cover until it clicks.

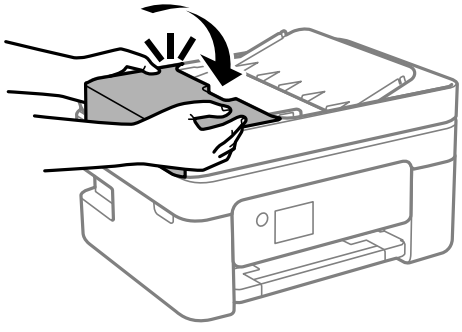

Paper Does Not Feed Correctly

Check the following points, and then take the appropriate actions to solve the problem.

- ❏ Place the printer on a flat surface and operate in the recommended environmental conditions.
- ❏ Use paper supported by this printer.
- ❏ Follow the paper handling precautions.
- ❏ Do not load more than the maximum number of sheets specified for the paper. For plain paper, do not load above the line indicated by the triangle symbol on the edge guide.
- ❏ Make sure the paper size and paper type settings match the actual paper size and paper type loaded in the printer.

Related Information

- ➡ "Environmental Specifications" on page 231
- ➡ "Paper Handling Precautions" on page 56
- ➡ "Available Paper and Capacities" on page 54
- ➡ "List of Paper Type" on page 60

Paper Jams

- ❏ Load paper in the correct direction, and slide the edge guides against the edges of the paper.
- ❏ Load one sheet of paper at a time if you have loaded several sheets of paper.

Related Information

- ➡ "Removing Jammed Paper" on page 190
- ➡ "Loading Paper in the Rear Paper Feed" on page 57

Paper Feeds at a Slant

Load paper in the correct direction, and slide the edge guides against the edges of the paper.

Related Information

- ➡ "Loading Paper in the Rear Paper Feed" on page 57

Several Sheets of Paper are Fed at a Time

- ❏ Load one sheet of paper at a time.
- ❏ When several sheets of paper are fed at a time during manual 2-sided printing, remove any paper which is loaded in the printer before you reload the paper.

Paper Out Error Occurs

When a paper out error occurs although paper is loaded in the rear paper feed, reload paper in the center of the rear paper feed.

Paper is Ejected During Printing

When you load letterhead paper (paper on which information such as the sender's name or corporation name are pre-printed in the header), select **Letterhead** as the paper type setting.

Original Does Not Feed in the ADF

❏ Use originals supported by the ADF.

❏ Load originals in the correct direction, and slide the ADF edge guides against the edges of the originals.

❏ Clean the inside of the ADF.

❏ Do not load originals above the line indicated by the triangle symbol on the ADF.

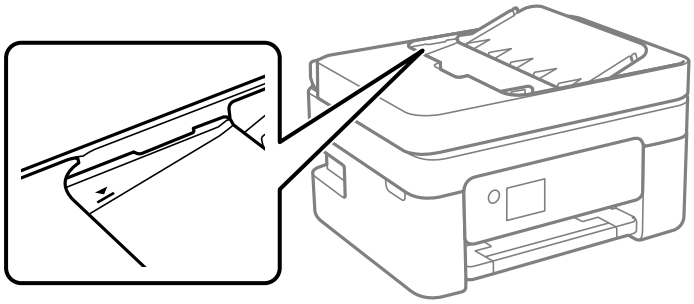

❏ On the screen for copy, scan, or fax, check that the ADF icon is on. If it is off, place the originals again.

❏ Make sure that an original has not been placed on the scanner glass.

Related Information

➡ "Available Originals for the ADF" on page 60

➡ "Placing Originals on the ADF" on page 61

➡ "Cleaning the ADF" on page 171

Power and Control Panel Problems

Power Does Not Turn On

❏ Make sure the power cord is securely plugged in.

❏ Hold down the ⏻ button for a little longer.

Power Does Not Turn Off

Hold down the ⏻ button for a little longer. If you still cannot turn off the printer, unplug the power cord. To prevent the print head from drying out, turn the printer back on and turn it off by pressing the ⏻ button.

Power Turns Off Automatically

❏ Select **Settings** > **General Settings** > **Basic Settings** > **Power Off Settings**, and then disable the **Power Off If Inactive** and **Power Off If Disconnected** settings.

❏ Select **Settings** > **General Settings** > **Basic Settings**, and then disable the **Power Off Timer** setting.

Note:
*Your product may have the **Power Off Settings** or **Power Off Timer** feature depending on the location of purchase.*

LCD Screen Gets Dark

The printer is in sleep mode. Press any button on the control panel to return the LCD screen to its former state.

Cannot Print from a Computer

Checking the Connection (USB)

❏ Connect the USB cable securely to the printer and the computer.

❏ If you are using a USB hub, try to connect the printer directly to the computer.

❏ If the USB cable cannot be recognized, change the port, or change the USB cable.

❏ If the printer cannot print using a USB connection, try the following.

Disconnect the USB cable from the computer. Right-click on the printer icon displayed on the computer, and then select **Remove Device**. Next, connect the USB cable to the computer and try a test print.

Re-set the USB connection by following the steps in this manual for changing the connection method to a computer. See the related information link below for details.

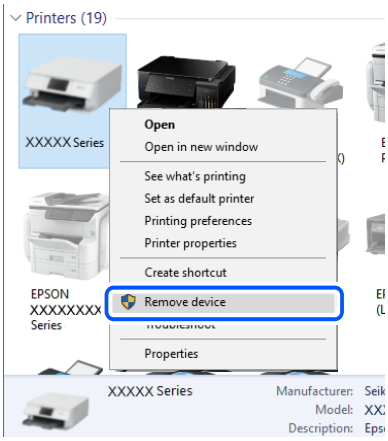

Related Information

➡ "Changing the Connection Method to a Computer" on page 49

Checking the Connection (Network)

❏ When you have changed your wireless router or provider, try making network settings for the printer again. Connect the computer or smart device to the same SSID as the printer.

❏ Turn off the devices you want to connect to the network. Wait for about 10 seconds, and then turn on the devices in the following order; wireless router, computer or smart device, and then printer. Move the printer and computer or smart device closer to the wireless router to help with radio wave communication, and then try to make network settings again.

❏ Print the network connection report. See the related information link below for details. If the report shows that the network connection failed, check the network connection report and then follow the printed solutions.

❏ If the IP address assigned to the printer is 169.254.XXX.XXX, and the subnet mask is 255.255.0.0, the IP address may not be assigned correctly. Restart the wireless router or reset the network settings for the printer. If this does not solve the problem, see the documentation for the wireless router.

❏ Try accessing any website from your computer to make sure that your computer's network settings are correct. If you cannot access any website, there is a problem on the computer. Check the network connection of the computer.

Related Information

➡ "Connecting to a Computer" on page 24

➡ "Printing a Network Connection Report" on page 42

Checking the Software and Data

❏ Make sure that a genuine Epson printer driver is installed. If a genuine Epson printer driver is not installed, the available functions are limited. We recommend using a genuine Epson printer driver. See the related information link below for details.

❏ If you are printing a large data size image, the computer may run out of memory. Print the image at a lower resolution or a smaller size.

Related Information

➡ "Checking for Genuine Epson Printer Drivers" on page 198

➡ "Installing the Latest Applications" on page 184

Checking for Genuine Epson Printer Drivers

You can check if a genuine Epson printer driver is installed on your computer by using one of the following methods.

Windows

Select **Control Panel** > **View devices and printers** (**Printers**, **Printers and Faxes**), and then do the following to open the print server properties window.

❏ Windows 10/Windows 8.1/Windows 8/Windows 7/Windows Server 2016/Windows Server 2012 R2/Windows Server 2012/Windows Server 2008 R2

Click the printer icon, and then click **Print server properties** at the top of the window.

❏ Windows Vista/Windows Server 2008

Right-click on the **Printers** folder, and then click **Run as administrator** > **Server Properties**.

❏ Windows XP/Windows Server 2003 R2/Windows Server 2003

From the **File** menu, select **Server Properties**.

Click the **Driver** tab. If your printer name is displayed in the list, a genuine Epson printer driver is installed on your computer.

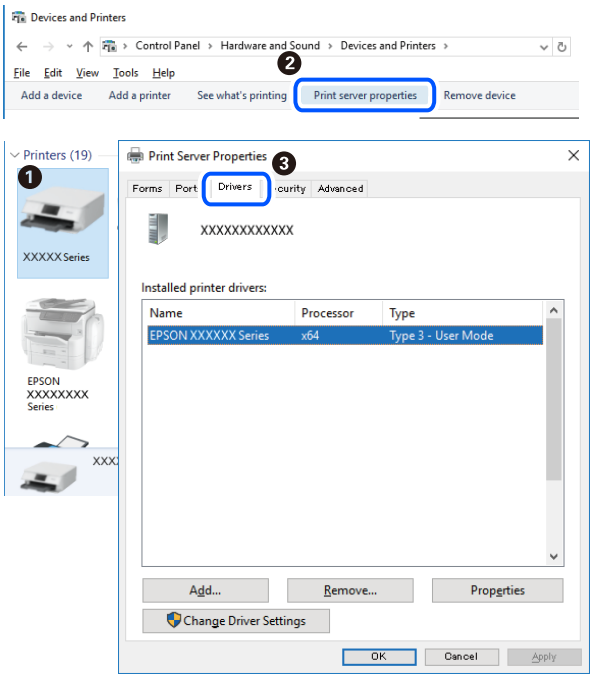

Mac OS

Select **System Preferences** from the menu > **Printers & Scanners** (or **Print & Scan**, **Print & Fax**), and then select the printer. Click **Options & Supplies**, and if the **Options** tab and **Utility** tab are displayed on the window, a genuine Epson printer driver is installed on your computer.

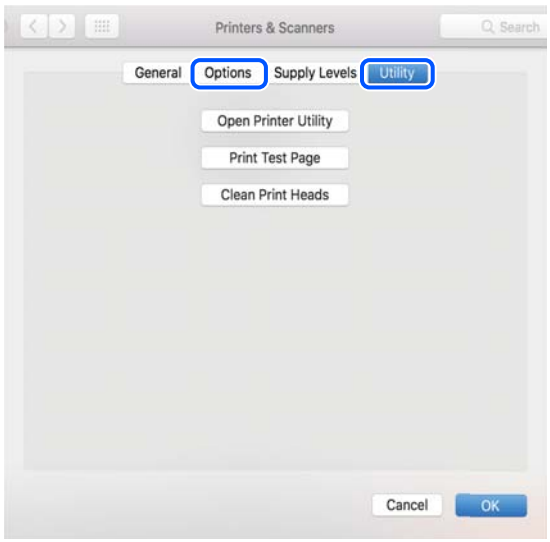

Related Information

➡ "Installing the Latest Applications" on page 184

Checking the Printer Status from the Computer (Windows)

Click **Print Queue** on the printer driver's **Maintenance** tab, and then check the following.

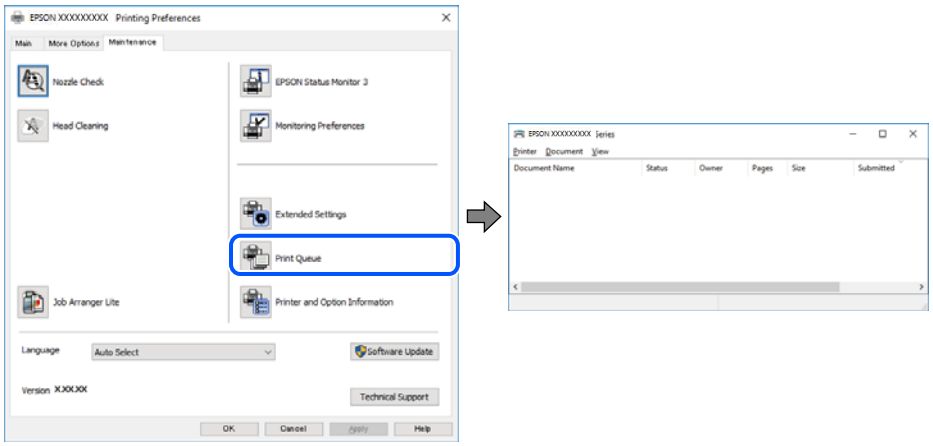

❑ Check if there are any paused print jobs.

If unnecessary data remains, select **Cancel all documents** from the **Printer** menu.

❏ Make sure the printer is not offline or pending.

If the printer is offline or pending, clear the offline or pending setting from the **Printer** menu.

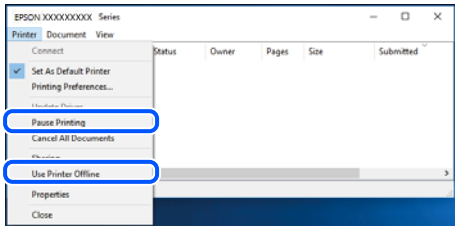

❏ Make sure the printer is selected as the default printer from the **Printer** menu (there should be a check mark on the menu item).

If the printer is not selected as the default printer, set it as the default printer. If there are multiple icons in **Control Panel** > **View devices and printers** (**Printers**, **Printers and Faxes**), see the following to select the icon.

Example)

USB connection: EPSON XXXX Series

Network connection: EPSON XXXX Series (network)

If you install the printer driver multiple times, copies of printer driver may be created. If copies such as "EPSON XXXX Series (copy 1)" are created, right-click the copied driver icon, and then click **Remove Device**.

❏ Make sure the printer port is selected correctly in **Property** > **Port** from the **Printer** menu as follows.

Select "**USBXXX**" for a USB connection, or "**EpsonNet Print Port**" for a network connection.

Checking the Printer Status from the Computer (Mac OS)

Make sure the printer status is not **Pause**.

Select **System Preferences** from the menu > **Printers & Scanners** (or **Print & Scan**, **Print & Fax**), and then double-click the printer. If the printer is paused, click **Resume** (or **Resume Printer**).

When You Cannot Make Network Settings

❏ Turn off the devices you want to connect to the network. Wait for about 10 seconds, and then turn on the devices in the following order; wireless router, computer or smart device, and then printer. Move the printer and computer or smart device closer to the wireless router to help with radio wave communication, and then try to make network settings again.

❏ Select **Settings** > **General Settings** > **Network Settings** > **Connection Check**, and then print the network connection report. If an error has occurred, check the network connection report and then follow the printed solutions.

Related Information

➡ “Printing a Network Connection Report” on page 42

➡ “Messages and Solutions on the Network Connection Report” on page 43

Cannot Connect from Devices Even Though Network Settings are No Problems

If you cannot connect from the computer or smart device to the printer even though the network connection report does not show any problems, see the following.

❏ When you are using multiple wireless routers at the same time, you may not be able to use the printer from the computer or smart device depending on the settings of the wireless routers. Connect the computer or smart device to the same wireless router as the printer.

Disable the tethering function on the smart device if it is enabled.

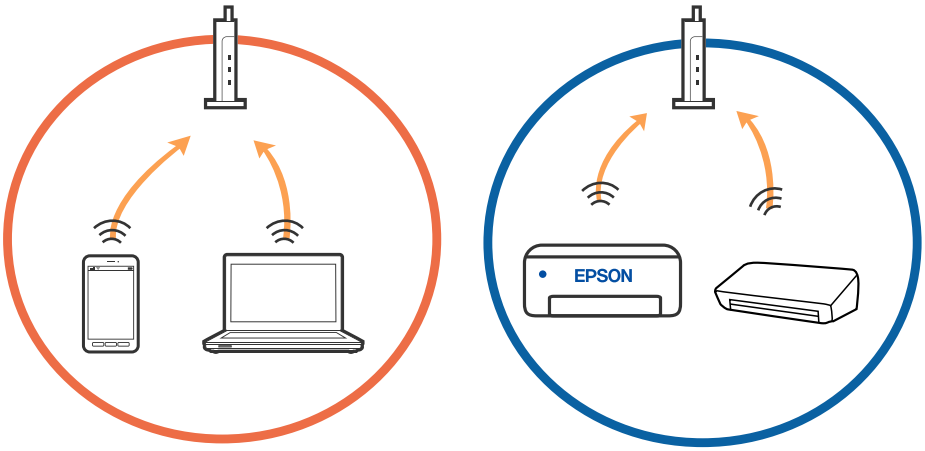

❏ You may not be able to connect to the wireless router when the wireless router has multiple SSIDs and devices are connected to different SSIDs on the same wireless router. Connect the computer or smart device to the same SSID as the printer.

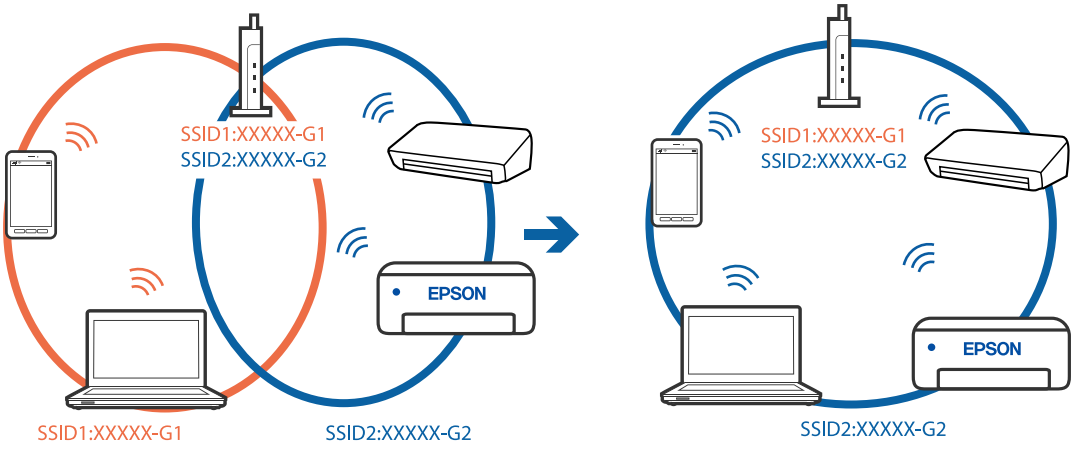

❏ A wireless router that is compliant with both IEEE802.11a and IEEE802.11g has SSIDs of 2.4 GHz and 5 GHz. If you connect the computer or smart device to a 5 GHz SSID, you cannot connect to the printer because the printer only supports communication over 2.4 GHz. Connect the computer or smart device to the same SSID as the printer.

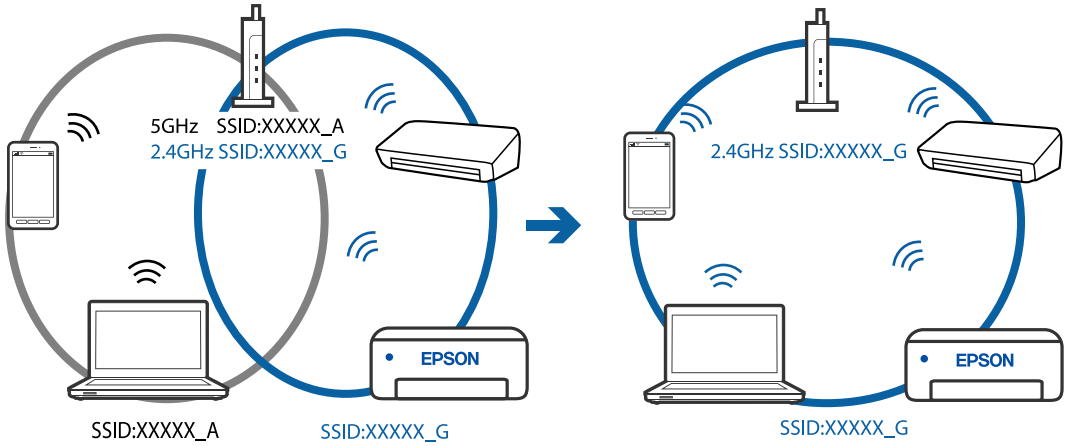

❏ Most wireless routers have a privacy separator feature that blocks communication between connected devices. If you cannot communicate between the printer and the computer or smart device even if they are connected to the same network, disable the privacy separator on the wireless router. See the manual provided with the wireless router for details.

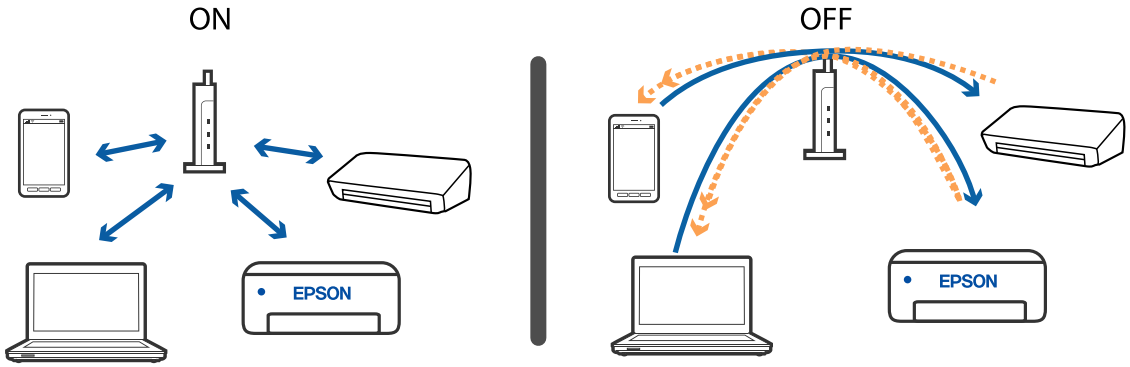

Related Information

➡ “Checking the SSID Connected to the Printer” on page 203
➡ “Checking the SSID for the Computer” on page 204

Checking the SSID Connected to the Printer

Select **Settings** > **General Settings** > **Network Settings** > **Network Status**.

You can check the SSID for Wi-Fi and Wi-Fi Direct from each menu.

Checking the SSID for the Computer

Windows

Click  in the task tray on the desktop. Check the name of the connected SSID from the list displayed.



Mac OS

Click the Wi-Fi icon at the top of the computer screen. A list of SSIDs is displayed and the connected SSID is indicated with a check mark.



Wireless LAN (Wi-Fi) Connections Become Unstable When Using USB 3.0 Devices on a Mac

When you connect a device to the USB 3.0 port on a Mac, radio frequency interference may occur. Try the following if you cannot connect to wireless LAN (Wi-Fi) or if operations become unstable.

❏ Place the device that is connected to the USB 3.0 port further away from the computer.

❏ If the printer supports the 5 GHz frequency range, connect to the SSID for the 5 GHz range.

Related Information

➡ "Wi-Fi Specifications" on page 229

Cannot Print from an iPhone, iPad, or iPod touch

❏ Connect the iPhone, iPad, or iPod touch to the same network (SSID) as the printer.

❏ Enable **Paper Setup Auto Display** in the following menus.

Settings > **General Settings** > **Printer Settings** > **Paper Source Settings** > **Paper Setup Auto Display**

❏ Enable the AirPrint setting on Web Config.

Related Information

➡ "Connecting to a Smart Device" on page 25

➡ "Application for Configuring Printer Operations (Web Config)" on page 177

Printout Problems

Printout is Scuffed or Color is Missing

If you have not used the printer for a long time, the print head nozzles may be clogged and ink drops may not be discharged. Perform a nozzle check, and then clean the print head if any of the print head nozzles are clogged.

Related Information

➡ "Checking and Cleaning the Print Head" on page 168

Banding or Unexpected Colors Appear

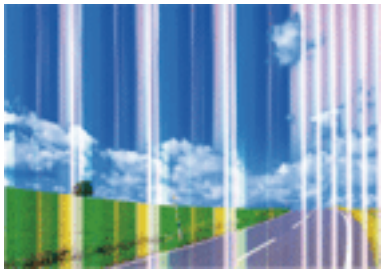

The print head nozzles may be clogged. Perform a nozzle check to check if the print head nozzles are clogged. Clean the print head if any of the print head nozzles are clogged.

Related Information

➡ "Checking and Cleaning the Print Head" on page 168

Colored Banding Appears at Intervals of Approximately 2.5 cm

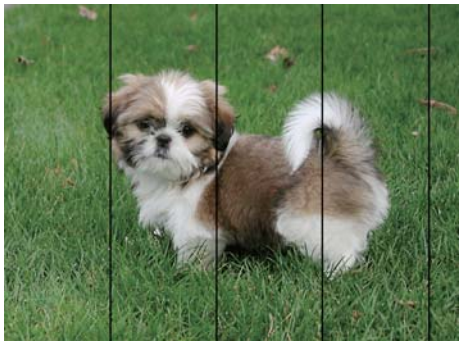

❏ Select the appropriate paper type setting for the type of paper loaded in the printer.

❏ Align the print head using the **Horizontal Alignment** feature.

❏ When printing on plain paper, print using a higher quality setting.

Related Information

➡ "List of Paper Type" on page 60

➡ "Aligning the Print Head" on page 170

Blurry Prints, Vertical Banding, or Misalignment



Align the print head using the **Vertical Alignment** feature.

Related Information

➡ "Aligning the Print Head" on page 170

Print Quality Does Not Improve Even After Aligning the Print Head

During bidirectional (or high speed) printing, the print head prints while moving in both directions, and vertical lines may be misaligned. If print quality does not improve, disable the bidirectional (or high speed) setting. Disabling this setting may slow down printing speed.

❏ Windows

Clear **High Speed** on the printer driver's **More Options** tab.

❏ Mac OS

Select **System Preferences** from the menu > **Printers & Scanners** (or **Print & Scan**, **Print & Fax**), and then select the printer. Click **Options & Supplies** > **Options** (or **Driver**). Select **Off** as the **High Speed Printing** setting.

Print Quality is Poor

Check the following if the print quality is poor due to blurry prints, banding, missing colors, faded colors, and misalignment in the prints.

Checking the printer

❏ Perform a nozzle check, and then clean the print head if any of the print head nozzles are clogged.

❏ Align the print head.

Checking the paper

❏ Use paper supported by this printer.

❏ Do not print on paper that is damp, damaged, or too old.

❏ If the paper is curled or the envelope is puffed up, flatten it.

❏ Do not stack the paper immediately after printing.

❏ Dry the printouts completely before filing or displaying them. When drying the printouts, avoid direct sun light, do not use a dryer, and do not touch the printed side of paper.

❏ When printing images or photos, Epson recommends using genuine Epson paper rather than plain paper. Print on the printable side of the genuine Epson paper.

Checking the print settings

❏ Select the appropriate paper type setting for the type of paper loaded in the printer.

❏ Print using a higher quality setting.

Checking the ink cartridge

❏ Epson recommends using the ink cartridge before the date printed on the package.

❏ For best results, use up ink cartridge within six months of opening the package.

❏ Try to use genuine Epson ink cartridges. This product is designed to adjust colors based on the use of genuine Epson ink cartridges. The use of non-genuine ink cartridges may cause print quality to decline.

Related Information

➡ "Checking and Cleaning the Print Head" on page 168
➡ "Aligning the Print Head" on page 170
➡ "Available Paper and Capacities" on page 54
➡ "List of Paper Type" on page 60
➡ "Paper Handling Precautions" on page 56

Paper Is Smeared or Scuffed

❏ When horizontal banding appears or the top or bottom of the paper is smeared, load paper in the correct direction and slide the edge guides to the edges of the paper.

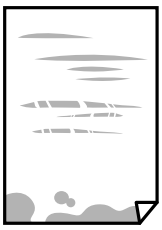

❏ When vertical banding appears or the paper is smeared, clean the paper path.

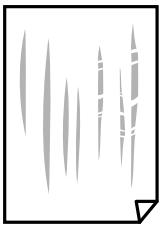

❏ Place the paper on a flat surface to check if it is curled. If it is, flatten it.

❏ When performing manual 2-sided printing, make sure that the ink is completely dry before reloading the paper.

Related Information

➡ "Loading Paper in the Rear Paper Feed" on page 57
➡ "Cleaning the Paper Path for Ink Smears" on page 170

Paper is Smeared During Automatic 2-Sided Printing

When using the automatic 2-sided printing feature and printing high density data such as images and graphs, set the print density to lower and the drying time to longer.

Related Information

➡ "Printer Settings" on page 68

Printed Photos are Sticky

You may be printing on the wrong side of the photo paper. Make sure you are printing on the printable side.

When printing on the wrong side of the photo paper, you need to clean the paper path.

Related Information

➡ "Cleaning the Paper Path for Ink Smears" on page 170

Images or Photos are Printed in Unexpected Colors

When printing from the Windows printer driver, the Epson auto photo adjustment setting is applied by default depending on the paper type. Try change the setting.

On the **More Options** tab, select **Custom** in **Color Correction**, and then click **Advanced**. Change the **Scene Correction** setting from **Auto Correct** to any other option. If changing the setting does not work, use any color correction method other than **PhotoEnhance** in **Color Management**.

Related Information

➡ "Adjusting the Print Color" on page 104

Cannot Print Without Margins

Make borderless setting in the print settings. If you select a paper type that does not support borderless printing, you cannot select **Borderless**. Select a paper type that supports borderless printing.

Related Information

➡ "Basic Menu Options for Copying" on page 121
➡ "Printing Basics" on page 90
➡ "Printing Basics" on page 108

Edges of the Image are Cropped During Borderless Printing

During borderless printing, the image is slightly enlarged and the protruding area is cropped. Select a smaller enlargement setting.

❏ Control panel

Change the **Expansion** setting.

❏ Windows

Click **Settings** next to the **Borderless** checkbox on the printer driver's **Main** tab, and then change the settings.

❏ Mac OS

Change the **Expansion** setting from the print dialog's **Print Settings** menu.

Related Information

➡ "Basic Menu Options for Copying" on page 121

The Position, Size, or Margins of the Printout Are Incorrect

❏ Load paper in the correct direction, and slide the edge guides against the edges of the paper.

❏ When placing the originals on the scanner glass, align the corner of the original with the corner indicated by a symbol on the frame of the scanner glass. If the edges of the copy are cropped off, move the original slightly away from the corner.

❏ When placing the originals on the scanner glass, clean the scanner glass and the document cover. If there is dust or stains on the glass, the copy area may extend to include the dust or stains, resulting in the wrong copying position or small images.

❏ Select the appropriate **Original Size** in the copy settings.

❏ Select the appropriate paper size setting.

❏ Adjust the margin setting in the application so that it falls within the printable area.

Related Information

➡ "Loading Paper in the Rear Paper Feed" on page 57

➡ "Placing Originals on the Scanner Glass" on page 63

➡ "Cleaning the Scanner Glass" on page 173

➡ "Printable Area" on page 226

Printed Characters Are Incorrect or Garbled

❏ Connect the USB cable securely to the printer and the computer.

❏ Cancel any paused print jobs.

❏ Do not put the computer manually into the **Hibernate** mode or the **Sleep** mode while printing. Pages of garbled text may be printed next time you start the computer.

❏ If you use the printer driver you had previously used, printed characters may be garbled. Make sure that the printer driver you are using is for this printer. Check the printer name on the top of the printer driver window.

The Printed Image Is Inverted

Clear any mirror image settings in the printer driver or the application.

❏ Windows

Clear **Mirror Image** on the printer driver's **More Options** tab.

❏ Mac OS

Clear **Mirror Image** from the print dialog's **Print Settings** menu.

Mosaic-Like Patterns in the Prints

When printing images or photos, print using high-resolution data. Images on websites are often low resolution although they look good enough on the display, and so print quality may decline.

Uneven Colors, Smears, Dots, or Straight Lines Appear in the Copied Image

❏ Clean the paper path.

❏ Clean the scanner glass.

❏ Clean the ADF.

❏ Do not press too hard on the original or the document cover when you are placing the originals on the scanner glass.

❏ When the paper is smeared, lower the copy density setting.

Related Information

➡ "Cleaning the Paper Path for Ink Smears" on page 170

➡ "Cleaning the Scanner Glass" on page 173

➡ "Cleaning the ADF" on page 171

➡ "Basic Menu Options for Copying" on page 121

Moiré (Cross-Hatch) Patterns Appear in the Copied Image

Change the reduce and enlarge setting or place the original at a slightly different angle.

Related Information

➡ "Basic Menu Options for Copying" on page 121

An Image of the Reverse Side of the Original Appears in the Copied Image

❏ For a thin original, place the original on the scanner glass and then place a piece of black paper over it.

❏ Lower the copy density setting on the control panel.

Related Information

➡ "Basic Menu Options for Copying" on page 121

Banding Appears when Copying from the ADF

Depending on the original, banding may appear when copying from the ADF.

❏ Copy from the scanner glass.

❏ Copy using a higher quality setting.

The Text or Image Copied from the ADF is Squeezed or Stretched

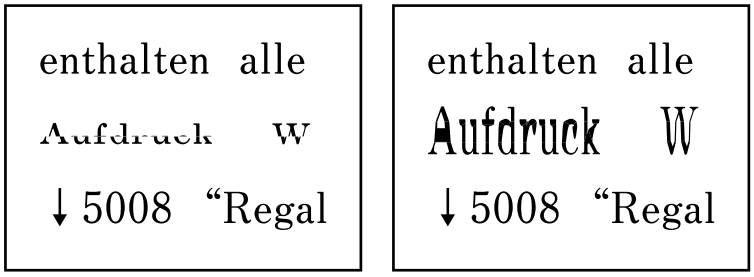

Some originals may not be scanned properly from the ADF. Place originals on the scanner glass.

Related Information

➡ "Placing Originals on the Scanner Glass" on page 63

The Printout Problem Could Not be Cleared

If you have tried all of the solutions and have not solved the problem, try uninstalling and then reinstalling the printer driver.

Related Information

➡ "Uninstalling Applications" on page 185
➡ "Installing the Latest Applications" on page 184

Other Printing Problems

Printing Is Too Slow

❏ Close any unnecessary applications.

❏ Lower the quality setting. High quality printing slows down the printing speed.

❏ Enable the bidirectional (or high speed) setting. When this setting is enabled, the print head prints while moving in both directions, and the printing speed increases.

❏ Windows

Select **High Speed** on the printer driver's **More Options** tab.

❏ Mac OS

Select **System Preferences** from the menu > **Printers & Scanners** (or **Print & Scan**, **Print & Fax**), and then select the printer. Click **Options & Supplies** > **Options** (or **Driver**). Select **On** as the **High Speed Printing** setting.

❏ Disable quiet mode. This feature slows down the printing speed.

❏ Control Panel

Select on the home screen, and then disable **Quiet Mode**.

❏ Windows

Select **Off** as the **Quiet Mode** setting on the printer driver's **Main** tab.

❏ Mac OS

Select **System Preferences** from the menu > **Printers & Scanners** (or **Print & Scan**, **Print & Fax**), and then select the printer. Click **Options & Supplies** > **Options** (or **Driver**). Select **Off** as the **Quiet Mode** setting.

Printing or Copying Slows Down Dramatically During Continuous Operation

Printing or Copying slows down to prevent the printer mechanism from overheating and being damaged. However, you can continue operation. To return to normal speed, leave the printer idle for at least 30 minutes. The speed does not return to normal if the power is off.

Cannot Cancel Printing from a Computer Running Mac OS X v10.6.8

If you want to stop printing from your computer, make the following settings.

Run Web Config, and then select **Port9100** as the **Top Priority Protocol** setting in **AirPrint Setup**. Select **System Preferences** from the menu > **Printers & Scanners** (or **Print & Scan**, **Print & Fax**), remove the printer, and then add the printer again.

Cannot Start Scanning

❏ If you are scanning with the ADF, check that the document cover and ADF cover are closed.

❏ You cannot use ADF when scanning from **Photo Mode** in Epson Scan 2.

❏ Connect the USB cable securely to the printer and the computer. If you are using a USB hub, try to connect the printer directly to the computer.

❏ If you scan at a high resolution over a network, a communication error may occur. Lower the resolution.

❏ Make sure that the correct printer (scanner) is selected on Epson Scan 2.

Check whether or not the printer is recognized when using Windows

In Windows, make sure the printer (scanner) is displayed in **Scanner and Camera**. The printer (scanner) should be displayed as "EPSON XXXXX (printer name)". If the printer (scanner) is not displayed, uninstall and then re-install Epson Scan 2. See the following to access **Scanner and Camera**.

❏ Windows 10

Click on the start button, and then select **Windows System** > **Control Panel**, enter "Scanner and Camera" in the search charm, click **View scanners and cameras**, and then check if the printer is displayed.

❏ Windows 8.1/Windows 8/Windows Server 2012 R2/Windows Server 2012

Select **Desktop** > **Settings** > **Control Panel**, enter "Scanner and Camera" in the search charm, click **Show Scanner and Camera**, and then check if the printer is displayed.

❏ Windows 7/Windows Server 2008 R2

Click the start button and select **Control Panel**, enter "Scanner and Camera" in the search charm, click **View scanners and cameras**, and then check if the printer is displayed.

❏ Windows Vista/Windows Server 2008

Click the start button, select **Control Panel** > **Hardware and Sound** > **Scanners and Cameras**, and then check if the printer is displayed.

❏ Windows XP/Windows Server 2003 R2/Windows Server 2003

Click the start button, select **Control Panel** > **Printers and Other Hardware** > **Scanner and Cameras**, and then check if the printer is displayed.

Related Information

➡ "Uninstalling Applications" on page 185

➡ "Installing the Latest Applications" on page 184

Cannot Start Scanning when Using the Control Panel

❏ Make sure Epson Scan 2 and Epson Event Manager are installed correctly.

❏ Check the scanning setting assigned in Epson Event Manager.

Scanned Image Problems

Uneven Colors, Dirt, Spots, and so on Appear when Scanning from the Scanner Glass

❏ Clean the scanner glass.

❏ Remove any trash or dirt that adheres to the original.

❏ Do not press with too much force on the original or the document cover. If you press with too much force, blurring, smudges, and spots may occur.

Related Information

➡ "Cleaning the Scanner Glass" on page 173

Straight Lines Appear when Scanning from ADF

❏ Clean the ADF.

Straight lines may appear in the image when trash or dirt gets into the ADF.

For details, see the manual for the scanner.

❏ Remove any trash or dirt that adheres to the original.

Related Information

➡ "Cleaning the ADF" on page 171

The Text or Image Scanned from the ADF is Squeezed or Stretched

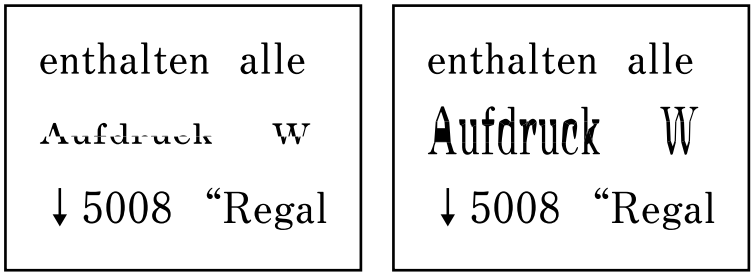

Some originals may not be scanned properly from the ADF. Place originals on the scanner glass.

Related Information

➡ "Placing Originals on the Scanner Glass" on page 63

The Image Quality Is Rough

❏ Set the **Mode** in Epson Scan 2 according to the original you want to scan. Scan using the settings for documents in **Document Mode**, and the settings for photos in **Photo Mode**.

❏ In Epson Scan 2, adjust the image using items on the **Advanced Settings** tab, and then scan.

❏ If the resolution is low, try increasing the resolution and then scanning.

Related Information

➡ "Scanning Using Epson Scan 2" on page 132

Offset Appears in the Background of Images

Images on the back of the original may appear in the scanned image.

❏ In Epson Scan 2, select the **Advanced Settings** tab, and then adjust the **Brightness**.

This feature may not be available depending on the settings on the **Main Settings** tab > **Image Type** or other settings on the **Advanced Settings** tab.

❏ In **Document Mode** in Epson Scan 2, select the **Advanced Settings** tab, and then **Image Option** > **Text Enhancement**.

❏ When scanning from the scanner glass, place black paper or a desk pad over the original.

Related Information

➡ "Placing Originals" on page 60

Text is Blurred

❏ In **Document Mode** in Epson Scan 2, select the **Advanced Settings** tab, and then **Image Option** > **Text Enhancement**.

❏ Select **Document Mode** as the **Mode** in Epson Scan 2. Scan using the settings for documents in **Document Mode**.

❏ In **Document Mode** in Epson Scan 2, when **Image Type** on the **Main Settings** tab is set to **Black & White**, adjust **Threshold** on the **Advanced Settings** tab. When you increase the **Threshold**, the black color area becomes larger.

❏ If the resolution is low, try increasing the resolution and then scanning.

Related Information

➡ "Scanning Using Epson Scan 2" on page 132

Moiré Patterns (Web-Like Shadows) Appear

If the original is a printed document, moiré patterns (web-like shadows) may appear in the scanned image.

❏ On the **Advanced Settings** tab in Epson Scan 2, set **Descreening**.

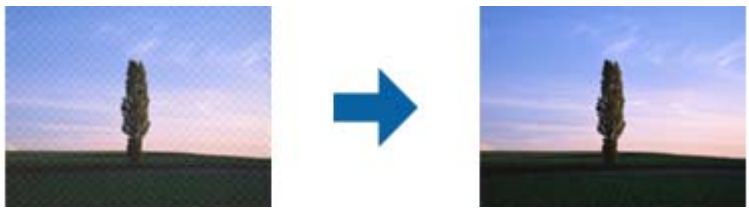

❏ Change the resolution, and then scan again.

Related Information

➡ "Scanning Using Epson Scan 2" on page 132

Cannot Scan the Correct Area on the Scanner Glass

❏ Make sure the original is placed correctly against the alignment marks.

❏ If the edge of the scanned image is missing, move the original slightly away from the edge of the scanner glass.

❏ When placing multiple originals on the scanner glass, make sure there is a gap of at least 20 mm (0.79 in.) between the originals.

❏ When scanning from the control panel and selecting the auto scan area cropping function, remove any trash or dirt from the scanner glass and document cover. If there is any trash or dirt around the original, the scanning range expands to include it.

Related Information

➡ "Placing Originals" on page 60

➡ "Cleaning the Scanner Glass" on page 173

Cannot Preview in Thumbnail

❏ When placing multiple originals on the scanner glass, make sure there is a gap of at least 20 mm (0.79 in.) between the originals.

❏ Check that the original is placed straight.

❏ Depending on the original, previewing may not be performed in **Thumbnail**. In this situation, clear the **Thumbnail** check box at the top of the preview widow to preview the entire scanned area, and then create marquees manually.

Related Information

➡ "Scanning Using Epson Scan 2" on page 132

Text is Not Recognized Correctly when Saving as a Searchable PDF

❏ On the **Image Format Options** window in Epson Scan 2, check that **Text Language** is set correctly on the **Text** tab.

❏ Check that the original is placed straight.

❏ Use an original with clear text. Text recognition may decline for the following types of originals.

- ❏ Originals that have been copied a number of times
- ❏ Originals received by fax (at low resolutions)
- ❏ Originals on which the letter spacing or line spacing is too small
- ❏ Originals with ruled lines or underlining over the text
- ❏ Originals with hand-written text
- ❏ Originals with creases or wrinkles

❏ In **Document Mode** in Epson Scan 2, when **Image Type** on the **Main Settings** tab is set to **Black & White**, adjust **Threshold** on the **Advanced Settings** tab. When you increase the **Threshold**, black becomes stronger.

❏ In **Document Mode** in Epson Scan 2, select the **Advanced Settings** tab, and then **Image Option** > **Text Enhancement**.

Related Information

➡ "Scanning Using Epson Scan 2" on page 132

Cannot Solve Problems in the Scanned Image

If you have tried all of the solutions and have not solved the problem, initialize the Epson Scan 2 settings using Epson Scan 2 Utility.

Note:
Epson Scan 2 Utility is an application that comes with Epson Scan 2.

1. Start Epson Scan 2 Utility.
   - ❏ Windows 10/Windows Server 2016
     Click the start button, and then select **EPSON** > **Epson Scan 2 Utility**.
   - ❏ Windows 8.1/Windows 8/Windows Server 2012 R2/Windows Server 2012
     Enter the application name in the search charm, and then select the displayed icon.
   - ❏ Windows 7/Windows Vista/Windows XP/Windows Server 2008 R2/Windows Server 2008/Windows Server 2003 R2/Windows Server 2003
     Click the start button, and then select **All Programs** or **Programs** > **EPSON** > **Epson Scan 2** > **Epson Scan 2 Utility**.
   - ❏ Mac OS
     Select **Go** > **Applications** > **Epson Software** > **Epson Scan 2 Utility**.
2. Select the **Other** tab.
3. Click **Reset**.
   Note:
   If initialization does not solve the problem, uninstall and re-install Epson Scan 2.

Related Information

➡ "Uninstalling Applications" on page 185
➡ "Installing the Latest Applications" on page 184

Other Scanning Problems

Scanning Is Too Slow

Lower the resolution.

Related Information

➡ "Scanning Using Epson Scan 2" on page 132

Scanning Slows Down Dramatically During Continuous Scanning

Scanning slows down to prevent the printer mechanism from overheating and being damaged. However, you can continue scanning. To return to normal scanning speed, leave the printer idle for at least 30 minutes. Scanning speed does not return to normal if the power is off.

Scanning Stops when Scanning to PDF/Multi-TIFF

- ❏ When scanning using Epson Scan 2, you can continuously scan up to 999 pages in PDF format and up to 200 pages in Multi-TIFF format.
- ❏ When scanning large volumes, we recommend scanning in grayscale.
- ❏ Increase the free space on the computer's hard disk. Scanning may stop if there is not enough free space.
- ❏ Try scanning at a lower resolution. Scanning stops if the total data size reaches the limit.

Related Information

➡ "Scanning Using Epson Scan 2" on page 132

Problems when Sending and Receiving Faxes

Related Information

➡ "Cannot Send or Receive Faxes" on page 219
➡ "Cannot Send Faxes" on page 220
➡ "Cannot Send Faxes to a Specific Recipient" on page 221
➡ "Cannot Send Faxes at a Specified Time" on page 221
➡ "Cannot Receive Faxes" on page 221
➡ "Memory Full Error Occurs" on page 222
➡ "Sent Fax Quality Is Poor" on page 222
➡ "Faxes Are Sent at the Wrong Size" on page 222
➡ "Received Fax Quality Is Poor" on page 223
➡ "Received Faxes Are Not Printed" on page 223
➡ "Pages are Blank or only a Small Amount of Text is Printed on the Second Page in Received Faxes" on page 223

Cannot Send or Receive Faxes

- ❏ Use **Check Fax Connection** on the control panel to run the automatic fax connection check. Try the solutions printed on the report.
- ❏ Check the **Line Type** setting. Setting to **PBX** may solve the problem. If your phone system requires an external access code to get an outside line, register the access code to the printer, and enter # (hash) at the beginning of a fax number when sending.
- ❏ If a communication error occurs, change the **Fax Speed** setting to **Slow(9,600bps)** on the control panel.
- ❏ Check that the telephone wall jack works by connecting a phone to it and testing it. If you cannot make or receive calls, contact your telecommunication company.
- ❏ To connect to a DSL phone line, you need to use a DSL modem equipped with a built-in DSL filter, or install a separate DSL filter to the line. Contact your DSL provider.
- ❏ If you are connecting to a DSL phone line, connect the printer directly to a telephone wall jack to see if the printer can send a fax. If it works, the problem may be caused by the DSL filter. Contact your DSL provider.
- ❏ Enable the **ECM** setting on the control panel. Color faxes cannot be sent or received when **ECM** is off.

- ❏ To send or receive faxes using the computer, make sure that the printer is connected using a USB cable or a network, and that the PC-FAX Driver have been installed on the computer. The PC-FAX Driver is installed together with FAX Utility.
- ❏ In Windows, make sure the printer (fax) is displayed in **Devices and Printers**, **Printer**, or **Printers and Other Hardware**. The printer (fax) is displayed as "EPSON XXXXX (FAX)". If the printer (fax) is not displayed, uninstall and then re-install the FAX Utility. See the following to access **Devices and Printers**, **Printer**, or **Printers and Other Hardware**.
  - ❏ Windows 10

    Click on the start button, and then select **Windows System** > **Control Panel** > **View devices and printers** in **Hardware and Sound**.
  - ❏ Windows 8.1/Windows 8

    Select **Desktop** > **Settings** > **Control Panel** > **View devices and printers** in **Hardware and Sound** or **Hardware**.
  - ❏ Windows 7

    Click the start button, and select **Control Panel** > **View devices and printers** in **Hardware and Sound** or **Hardware**.
  - ❏ Windows Vista

    Click the start button, and select **Control Panel** > **Printers** in **Hardware and Sound**.
  - ❏ Windows XP

    Click the start button, and select **Settings** > **Control Panel** > **Printers and Other Hardware** > **Printers and Faxes**.
- ❏ In Mac OS, check the following.
  - ❏ Select **System Preferences** from the menu > **Printers & Scanners** (or **Print & Scan**, **Print & Fax**), and then make sure the printer (fax) is displayed. The printer (fax) is displayed as "FAX XXXX (USB)" or "FAX XXXX (IP)". If the printer (fax) is not displayed, click [+] and then register the printer (fax).
  - ❏ Select **System Preferences** from the menu > **Printers & Scanners** (or **Print & Scan**, **Print & Fax**), and then double-click the printer (fax). If the printer is paused, click **Resume** (or **Resume Printer**).

Related Information

- ➡ "Check Fax Connection" on page 85
- ➡ "Basic Settings Menu" on page 86
- ➡ "Connecting the Printer to a Phone Line" on page 77
- ➡ "Uninstalling Applications" on page 185
- ➡ "Installing the Latest Applications" on page 184

Cannot Send Faxes

- ❏ Set up the header information for outgoing faxes on the control panel. Some fax machines automatically reject incoming faxes that do not include header information.
- ❏ If you have blocked your caller ID, unblock it. Some phones or fax machines automatically reject anonymous calls.
- ❏ Ask the recipient if the fax number is correct and the recipient's fax machine is ready to receive a fax.

Related Information

➡ "Basic Settings Menu" on page 86
➡ "Cannot Send or Receive Faxes" on page 219

Cannot Send Faxes to a Specific Recipient

Check the following if you cannot send faxes to a specific recipient due to an error.

❏ If the recipient machine does not pick up your call within 50 seconds after the printer has finished dialing, the call ends with an error. Dial using a connected telephone to check how long it takes before you hear a fax tone. If it takes more than 50 seconds, add pauses after the fax number to send the fax. The − is used to enter pauses. A hyphen is entered as the pause mark. One pause is about three seconds. Add multiple pauses as needed.

❏ If you have selected the recipient from the contacts list, verify that the registered information is correct. If the information is correct, select the recipient from the contacts list, press the ▶ button, select **Edit**, and then change **Fax Communication Mode** to **Slow(9,600bps)**.

Related Information

➡ "Sending Faxes Dialing from the External Phone Device" on page 143
➡ "Managing Contacts" on page 64
➡ "Cannot Send or Receive Faxes" on page 219

Cannot Send Faxes at a Specified Time

Set the date and the time correctly on the control panel.

Related Information

➡ "Sending Faxes in Monochrome at Specified Time of the Day (Send Fax Later)" on page 144
➡ "Basic Settings" on page 67

Cannot Receive Faxes

❏ If you have subscribed to a call forwarding service, the printer may not be able to receive faxes. Contact the service provider.

❏ If you have not connected a telephone to the printer, set the **Receive Mode** setting to **Auto** on the control panel.

❏ Under the following conditions, the printer runs out of memory and cannot receive faxes. See the troubleshooting for information on handling a memory full error.

  ❏ The number of received documents has reached the maximum of 100 documents.

  ❏ The printer's memory is full (100%).

❏ Check if the sender's fax number has been registered to the **Rejection Number List**. Faxes sent from numbers that have been added to this list are blocked when **Rejection Number List** in **Rejection Fax** is enabled.

❏ Ask the sender if header information is set up on their fax machine. Faxes that do not include header information are blocked when **Fax Header Blank** in **Rejection Fax** is enabled.

❏ Check if the sender's fax number is registered in the contacts list. Faxes sent from numbers that have not been registered to this list are blocked when **Unregistered Contacts** in **Rejection Fax** is enabled.

Related Information

➡ "Basic Settings Menu" on page 86
➡ "Cannot Send or Receive Faxes" on page 219
➡ "Memory Full Error Occurs" on page 222

Memory Full Error Occurs

❏ If the printer has been set to save received faxes on a computer, turn on the computer that is set to save the faxes. Once the faxes are saved in the computer, they are deleted from the printer's memory.

❏ Even though the memory is full, you can send a monochrome fax by using the **Direct Send** feature. Or divide your originals into two or more to send them in several batches.

❏ If the printer cannot print a received fax due to a printer error, such as a paper jam, the memory full error may occur. Solve the printer problem, and then contact the sender and ask them to send the fax again.

Related Information

➡ "Sending Many Pages of a Monochrome Document (Direct Send)" on page 143
➡ "Sending Faxes Dialing from the External Phone Device" on page 143
➡ "Removing Jammed Paper" on page 190

Sent Fax Quality Is Poor

❏ Clean the scanner glass.

❏ Clean the ADF.

❏ Change the **Density** setting on the control panel.

❏ If you are not sure about the capabilities of the recipient fax machine, enable the **Direct Send** feature or select **Fine** as the **Resolution** setting.

❏ Enable the **ECM** setting on the control panel.

Related Information

➡ "Fax Settings" on page 149
➡ "Basic Settings Menu" on page 86
➡ "Cleaning the Scanner Glass" on page 173
➡ "Cleaning the ADF" on page 171

Faxes Are Sent at the Wrong Size

❏ When sending a fax using the scanner glass, place the original correctly aligning its corner with the origin mark. Select your original size on the control panel.

❏ Clean the scanner glass and the document cover. If there is dust or stains on the glass, the scanning area may extend to include the dust or stains, resulting in the wrong scanning position or small images.

Related Information

➡ "Fax Settings" on page 149
➡ "Placing Originals" on page 60
➡ "Cleaning the Scanner Glass" on page 173

Received Fax Quality Is Poor

❏ Enable the **ECM** setting on the control panel.

❏ Contact the sender and ask them to send using a higher quality mode.

❏ Reprint the received fax. Select **Fax** >  > **Reprint Faxes** to reprint the fax.

Related Information

➡ "Basic Settings Menu" on page 86

Received Faxes Are Not Printed

If an error has occurred on the printer, such as a paper jam, the printer cannot print received faxes. Check the printer.

Related Information

➡ "Checking the Printer Status" on page 188
➡ "Removing Jammed Paper" on page 190

Pages are Blank or only a Small Amount of Text is Printed on the Second Page in Received Faxes

You can print on one page by using the **Delete Print Data After Split** feature in **Split Page Settings**.

Select **Delete Top** or **Delete Bottom** in **Delete Print Data After Split**, and then adjust **Threshold**. Increasing the threshold increases the amount deleted; a higher threshold gives you a higher possibility of printing on one page.

Related Information

➡ "Receive Settings Menu" on page 87

Other Faxing Problems

Cannot Make Calls on the Connected Telephone

Connect the telephone to the EXT. port on the printer, and pick up the receiver. If you cannot hear a dial tone through the receiver, connect the phone cable correctly.

Related Information

➡ "Connecting Your Phone Device to the Printer" on page 78

Answering Machine Cannot Answer Voice Calls

On the control panel, set the printer's **Rings to Answer** setting to a number higher than the number of rings for your answering machine.

Related Information

➡ "Basic Settings Menu" on page 86

➡ "Making Settings to Use an Answering Machine" on page 83

Sender's Fax Number Not Displayed on Received Faxes or the Number Is Wrong

The sender may not have set the fax header information or may have set it incorrectly. Contact the sender.

Other Problems

Slight Electric Shock when Touching the Printer

If many peripherals are connected to the computer, you may feel a slight electric shock when touching the printer. Install a ground wire to the computer that is connected to the printer.

Operation Sounds Are Loud

If operations sounds are too loud, enable **Quiet Mode**. Enabling this feature may reduce printing speed.

❏ Control panel

Select OFF on the home screen, and then enable **Quiet Mode**.

❏ Windows printer driver

Enable **Quiet Mode** on the **Main** tab.

❏ Mac OS printer driver

Select **System Preferences** from the menu > **Printers & Scanners** (or **Print & Scan**, **Print & Fax**), and then select the printer. Click **Options & Supplies** > **Options** (or **Driver**). Select **On** as the **Quiet Mode** setting.

The Date and Time Are Incorrect

Set the date and the time correctly on the control panel. After a power failure caused by a lightning strike or if the power is left off for a long time, the clock may show the wrong time.

Related Information

➡ "Basic Settings" on page 67

Application Is Blocked by a Firewall (for Windows Only)

Add the application to the Windows Firewall allowed program in security settings on the **Control Panel**.

Appendix

Technical Specifications

Printer Specifications

Print Head Nozzle Placement		Black ink nozzles: 180 Color ink nozzles: 59 for each color
Weight of Paper*	Plain Paper	64 to 90 g/m²(17 to 24lb)
	Envelopes	Envelope #10, DL, C6: 75 to 90 g/m² (20 to 24 lb)

* Even when the paper thickness is within this range, the paper may not feed in the printer or the print quality may decline depending on the paper properties or quality.

Printable Area

Printable Area for Single Sheets

Print quality may decline in the shaded areas due to the printer's mechanism.

Printing with borders

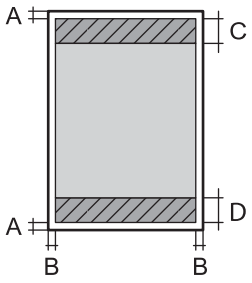

A	3.0 mm (0.12 in.)
B	3.0 mm (0.12 in.)
C	41.0 mm (1.61 in.)
D	37.0 mm (1.46 in.)

Borderless printing

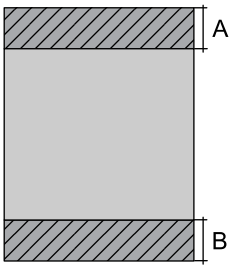

A	44.0 mm (1.73 in.)
B	40.0 mm (1.57 in.)

Printable Area for Envelopes

Print quality may decline in the shaded areas due to the printer's mechanism.

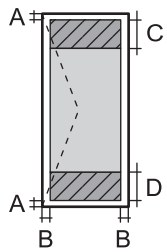

A	3.0 mm (0.12 in.)
B	5.0 mm (0.20 in.)
C	18.0 mm (0.71 in.)
D	41.0 mm (1.61 in.)

Scanner Specifications

Scanner Type	Flatbed
Photoelectric Device	CIS
Effective Pixels	10200×14040 pixels (1200 dpi)
Maximum Document Size	216×297 mm (8.5×11.7 in.) A4, Letter
Scanning Resolution	1200 dpi (main scan) 2400 dpi (sub scan)
Output Resolution	50 to 9600 dpi in 1 dpi increments
Color Depth	Color ❏ 48 bits per pixel internal (16 bits per pixel per color internal) ❏ 24 bits per pixel external (8 bits per pixel per color external) Grayscale ❏ 16 bits per pixel internal ❏ 8 bits per pixel external Black and white ❏ 16 bits per pixel internal ❏ 1 bits per pixel external
Light Source	LED

Interface Specifications

For Computer	Hi-Speed USB*

* USB 3.0 cables are not supported.

Fax Specifications

Fax Type	Walk-up black and white and color fax capability (ITU-T Super Group 3)
Supported Lines	Standard analogue telephone lines, PBX (Private Branch Exchange) telephone systems
Speed	Up to 33.6 kbps
Resolution	Monochrome ❏ Standard: 8 pel/mm×3.85 line/mm (203 pel/in.×98 line/in.) ❏ Fine: 8 pel/mm×7.7 line/mm (203 pel/in.×196 line/in.) ❏ Photo: 8 pel/mm×7.7 line/mm (203 pel/in.×196 line/in.) Color 200×200 dpi
Page Memory	Up to 100 pages (when received ITU-T No.1 chart in monochrome draft mode)
Redial*	2 times (with 1 minute intervals)
Interface	RJ-11 Phone Line, RJ-11 Telephone set connection

* The specifications may differ by country or region.

Network Function List

Network Functions and IPv4/IPv6

Functions			Supported	Remarks
Network Printing	EpsonNet Print (Windows)	IPv4	✓	-
	Standard TCP/IP (Windows)	IPv4, IPv6	✓	-
	WSD Printing (Windows)	IPv4, IPv6	✓	Windows Vista or later
	Bonjour Printing (Mac OS)	IPv4, IPv6	✓	-
	IPP Printing (Windows, Mac OS)	IPv4, IPv6	✓	-
	UPnP Printing	IPv4	-	Information appliance
	PictBridge Printing (Wi-Fi)	IPv4	-	Digital camera
	Epson Connect (Email Print, Remote Print)	IPv4	✓	-
	AirPrint (iOS, Mac OS)	IPv4, IPv6	✓	iOS 5 or later, Mac OS X v10.7 or later

Functions			Supported	Remarks
Network Scanning	Epson Scan 2	IPv4, IPv6	✓	-
	Event Manager	IPv4	✓	-
	Epson Connect (Scan to Cloud)	IPv4	✓	-
	AirPrint (Scan)	IPv4, IPv6	✓	OS X Mavericks or later
Fax	Send a fax	IPv4	✓	-
	Receive a fax	IPv4	✓	-
	AirPrint (Faxout)	IPv4, IPv6	✓	OS X Mountain Lion or later

Wi-Fi Specifications

Standards	IEEE802.11b/g/n*1
Frequency Range	2.4 GHz
Maximum Radio-Frequency Power Transmitted	20 dBm (EIRP)
Coordination Modes	Infrastructure, Wi-Fi Direct (Simple AP)*2*3
Wireless Securities*4	WEP (64/128bit), WPA2-PSK (AES)*5

*1 IEEE802.11n is only available for the HT20.

*2 Not supported for IEEE 802.11b.

*3 Simple AP mode is compatible with a Wi-Fi connection (infrastructure).

*4 Wi-Fi Direct supports WPA2-PSK (AES) only.

*5 Complies with WPA2 standards with support for WPA/WPA2 Personal.

Security Protocol

SSL/TLS	HTTPS Server/Client, IPPS

Supported Third Party Services

AirPrint	Print	iOS 5 or later/Mac OS X v10.7.x or later
	Scan	OS X Mavericks or later
	Fax	OS X Mountain Lion or later

Dimensions

Dimensions	Storage ❏ Width: 375 mm (14.8 in.) ❏ Depth: 300 mm (11.8 in.) ❏ Height: 218 mm (8.6 in.) Printing ❏ Width: 375 mm (14.8 in.) ❏ Depth: 578 mm (22.8 in.) ❏ Height: 242 mm (9.5 in.)
Weight*	Approx. 5.2 kg (11.5 lb)

* Without the ink cartridges and the power cord.

Electrical Specifications

Power Supply Rating	AC 100-240 V	AC 220-240 V
Rated Frequency Range	50-60 Hz	50-60 Hz
Rated Current	0.4-0.2 A	0.2 A
Power Consumption (with USB Connection)	Standalone copying: Approx. 12.0 W (ISO/IEC24712) Ready mode: Approx. 4.6 W Sleep mode: Approx. 0.7 W Power off: Approx. 0.2 W	Standalone copying: Approx. 12.0 W (ISO/IEC24712) Ready mode: Approx. 4.6 W Sleep mode: Approx. 0.7 W Power off: Approx. 0.3 W

Note:

❏ *Check the label on the printer for its voltage.*

❏ *For European users, see the following Website for details on power consumption.*

http://www.epson.eu/energy-consumption

Environmental Specifications

Operation	Use the printer within the range shown in the following graph. 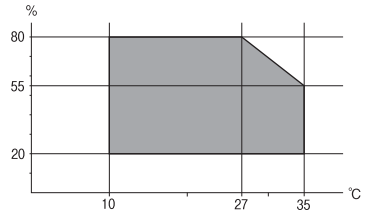 Temperature: 10 to 35°C (50 to 95°F) Humidity: 20 to 80% RH (without condensation)
Storage	Temperature: -20 to 40°C (-4 to 104°F)* Humidity: 5 to 85% RH (without condensation)

* You can store for one month at 40°C (104°F).

Environmental Specifications for Ink Cartridges

Storage Temperature	-30 to 40 °C (-22 to 104 °F)*
Freezing Temperature	-16 °C (3.2 °F) Ink thaws and is usable after approximately 3 hours at 25 °C (77 °F).

* You can store for one month at 40 °C (104 °F).

System Requirements

❏ Windows

Windows Vista, Windows 7, Windows 8/8.1, Windows 10 or later (32-bit, 64-bit)

Windows XP SP3 (32-bit)

Windows XP Professional x64 Edition SP2

Windows Server 2003 (SP2) or later

❏ Mac OS

Mac OS X v10.6.8 or later, macOS 11 or later

Note:

❏ *Mac OS may not support some applications and features.*

❏ *The UNIX File System (UFS) for Mac OS is not supported.*

Regulatory Information

Standards and Approvals

Standards and Approvals for European Model

For European users

Hereby, Seiko Epson Corporation declares that the following radio equipment model is in compliance with Directive 2014/53/EU. The full text of the EU declaration of conformity is available at the following website.

http://www.epson.eu/conformity

C624B

For use only in Ireland, UK, Austria, Germany, Liechtenstein, Switzerland, France, Belgium, Luxemburg, Netherlands, Italy, Portugal, Spain, Denmark, Finland, Norway, Sweden, Iceland, Croatia, Cyprus, Greece, Slovenia, Malta, Bulgaria, Czech, Estonia, Hungary, Latvia, Lithuania, Poland, Romania, and Slovakia.

Epson cannot accept responsibility for any failure to satisfy the protection requirements resulting from a non-recommended modification of the products.

CE

German Blue Angel

See the following website to check whether or not this printer meets the standards for the German Blue Angel.

http://www.epson.de/blauerengel

Restrictions on Copying

Observe the following restrictions to ensure the responsible and legal use of the printer.

Copying of the following items is prohibited by law:

- ❏ Bank bills, coins, government-issued marketable securities, government bond securities, and municipal securities
- ❏ Unused postage stamps, pre-stamped postcards, and other official postal items bearing valid postage
- ❏ Government-issued revenue stamps, and securities issued according to legal procedure

Exercise caution when copying the following items:

- ❏ Private marketable securities (stock certificates, negotiable notes, checks, etc.), monthly passes, concession tickets, etc.
- ❏ Passports, driver's licenses, warrants of fitness, road passes, food stamps, tickets, etc.

Note:
Copying these items may also be prohibited by law.

Responsible use of copyrighted materials:

Printers can be misused by improperly copying copyrighted materials. Unless acting on the advice of a knowledgeable attorney, be responsible and respectful by obtaining the permission of the copyright holder before copying published material.

Transporting and Storing the Printer

When you need to transport the printer to move or for repairs, follow the steps below to pack the printer.

> ***Caution:***
> *Be careful not to trap your hand or fingers when opening or closing the scanner unit. Otherwise you may be injured.*

> ***Important:***
> ❏ *When storing or transporting the printer, avoid tilting it, placing it vertically, or turning it upside down; otherwise ink may leak.*

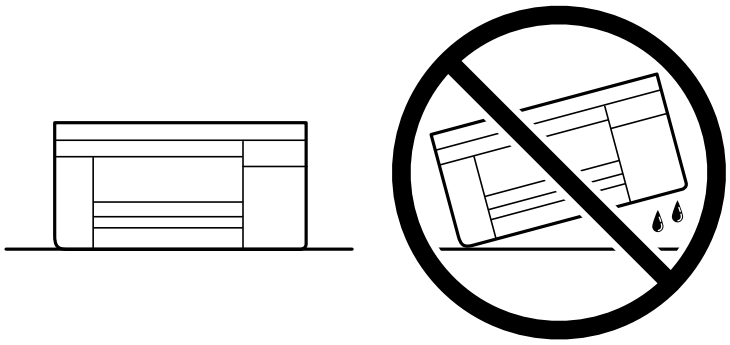

> ❏ *Leave the ink cartridges installed. Removing the cartridges can dry out the print head and may prevent the printer from printing.*

1. Turn off the printer by pressing the ⏻ button.
2. Make sure the power light turns off, and then unplug the power cord.

> ***Important:***
> *Unplug the power cord when the power light is off. Otherwise, the print head does not return to the home position causing the ink to dry, and printing may become impossible.*

3. Disconnect all cables such as the power cord and USB cable.
4. Remove all of the paper from the printer.
5. Make sure there are no originals on the printer.

6. Open the scanner unit with the document cover closed. Secure the ink cartridge holder to the case with tape.

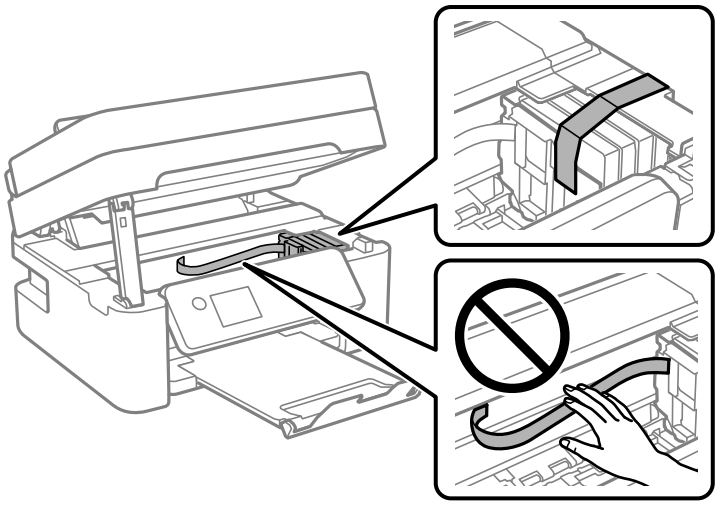

7. Close the scanner unit.

   For safety, the scanner unit is closed in two steps.

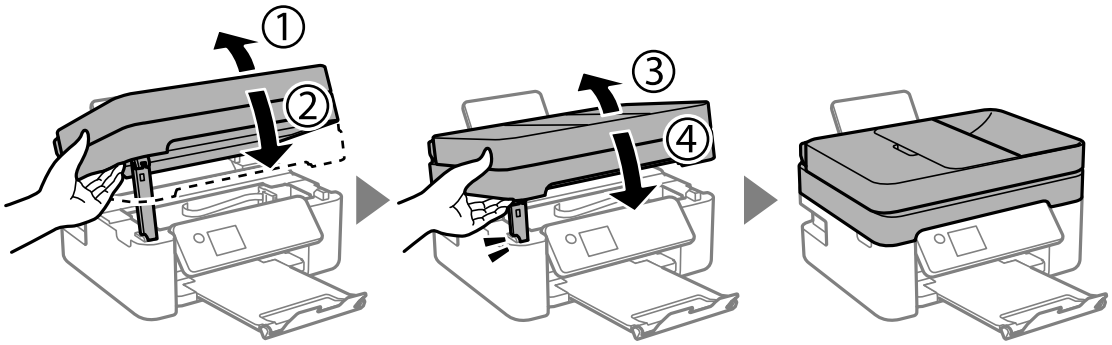

Note:
The scanner unit cannot be opened from the position shown below. Close it completely before opening it.

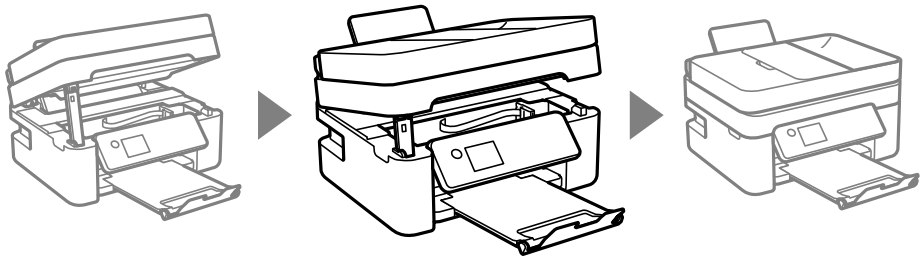

8. Prepare to pack the printer as shown below.

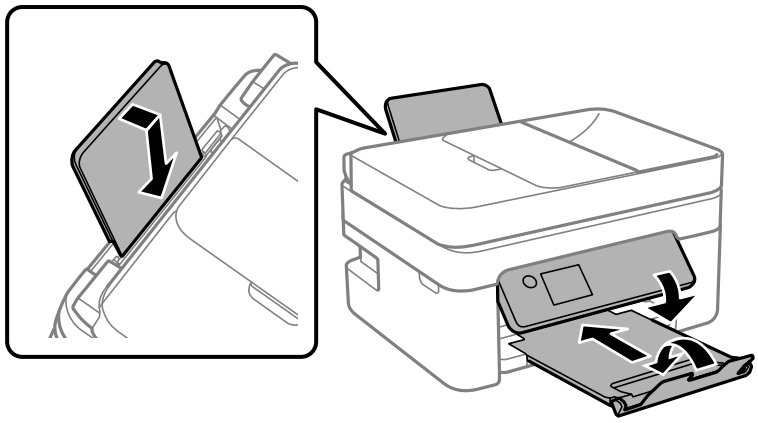

9. Pack the printer in its box, using the protective materials.

When you use the printer again, make sure you remove the tape securing the ink cartridge holder. If print quality has declined the next time you print, clean and align the print head.

Related Information

➡ "Part Names and Functions" on page 15

➡ "Checking and Cleaning the Print Head" on page 168

➡ "Aligning the Print Head" on page 170

Copyright

No part of this publication may be reproduced, stored in a retrieval system, or transmitted in any form or by any means, electronic, mechanical, photocopying, recording, or otherwise, without the prior written permission of Seiko Epson Corporation. No patent liability is assumed with respect to the use of the information contained herein. Neither is any liability assumed for damages resulting from the use of the information herein. The information contained herein is designed only for use with this Epson product. Epson is not responsible for any use of this information as applied to other products.

Neither Seiko Epson Corporation nor its affiliates shall be liable to the purchaser of this product or third parties for damages, losses, costs, or expenses incurred by the purchaser or third parties as a result of accident, misuse, or abuse of this product or unauthorized modifications, repairs, or alterations to this product, or (excluding the U.S.) failure to strictly comply with Seiko Epson Corporation's operating and maintenance instructions.

Seiko Epson Corporation and its affiliates shall not be liable for any damages or problems arising from the use of any options or any consumable products other than those designated as Original Epson Products or Epson Approved Products by Seiko Epson Corporation.

Seiko Epson Corporation shall not be held liable for any damage resulting from electromagnetic interference that occurs from the use of any interface cables other than those designated as Epson Approved Products by Seiko Epson Corporation.

© 2023 Seiko Epson Corporation

The contents of this manual and the specifications of this product are subject to change without notice.

Trademarks

- ❏ Epson Scan 2 software is based in part on the work of the Independent JPEG Group.
- ❏ libtiff

  Copyright © 1988-1997 Sam Leffler

  Copyright © 1991-1997 Silicon Graphics, Inc.

  Permission to use, copy, modify, distribute, and sell this software and its documentation for any purpose is hereby granted without fee, provided that (i) the above copyright notices and this permission notice appear in all copies of the software and related documentation, and (ii) the names of Sam Leffler and Silicon Graphics may not be used in any advertising or publicity relating to the software without the specific, prior written permission of Sam Leffler and Silicon Graphics.

  THE SOFTWARE IS PROVIDED "AS-IS" AND WITHOUT WARRANTY OF ANY KIND, EXPRESS, IMPLIED OR OTHERWISE, INCLUDING WITHOUT LIMITATION, ANY WARRANTY OF MERCHANTABILITY OR FITNESS FOR A PARTICULAR PURPOSE.

  IN NO EVENT SHALL SAM LEFFLER OR SILICON GRAPHICS BE LIABLE FOR ANY SPECIAL, INCIDENTAL, INDIRECT OR CONSEQUENTIAL DAMAGES OF ANY KIND, OR ANY DAMAGES WHATSOEVER RESULTING FROM LOSS OF USE, DATA OR PROFITS, WHETHER OR NOT ADVISED OF THE POSSIBILITY OF DAMAGE, AND ON ANY THEORY OF LIABILITY, ARISING OUT OF OR IN CONNECTION WITH THE USE OR PERFORMANCE OF THIS SOFTWARE.
- ❏ QR Code is a registered trademark of DENSO WAVE INCORPORATED in Japan and other countries.
- ❏ Intel® is a registered trademark of Intel Corporation.
- ❏ Microsoft®, Windows®, Windows Server®, and Windows Vista® are registered trademarks of Microsoft Corporation.
- ❏ Apple, Mac, macOS, OS X, Bonjour, ColorSync, Safari, AirPrint, iPad, iPhone, iPod touch, and iTunes are trademarks of Apple Inc., registered in the U.S. and other countries.
- ❏ Use of the Works with Apple badge means that an accessory has been designed to work specifically with the technology identified in the badge and has been certified by the developer to meet Apple performance standards.
- ❏ Google Cloud Print, Chrome, Google Play, and Android are trademarks of Google LLC.
- ❏ Adobe and Reader are either registered trademarks or trademarks of Adobe in the United States and/or other countries.
- ❏ General Notice: Other product names used herein are for identification purposes only and may be trademarks of their respective owners. Epson disclaims any and all rights in those marks.

Where to Get Help

Technical Support Web Site

If you need further help, visit the Epson support website shown below. Select your country or region and go to the support section of your local Epson website. The latest drivers, FAQs, manuals, or other downloadables are also available from the site.

http://support.epson.net/

http://www.epson.eu/Support (Europe)

If your Epson product is not operating properly and you cannot solve the problem, contact Epson support services for assistance.

Contacting Epson Support

Before Contacting Epson

If your Epson product is not operating properly and you cannot solve the problem using the troubleshooting information in your product manuals, contact Epson support services for assistance.

The following Epson support list is based on the country of sale. Some products may not be sold in your current location, so be sure to contact Epson support for the area in which you purchased your product.

If Epson support for your area is not listed below, contact the dealer where you purchased your product.

Epson support will be able to help you much more quickly if you give them the following information:

❏ Product serial number

(The serial number label is usually on the back of the product.)

❏ Product model

❏ Product software version

(Click **About**, **Version Info**, or a similar button in the product software.)

❏ Brand and model of your computer

❏ Your computer operating system name and version

❏ Names and versions of the software applications you normally use with your product

Note:
Depending on the product, the dial list data for fax and/or network settings may be stored in the product's memory. Due to breakdown or repair of a product, data and/or settings may be lost. Epson shall not be responsible for the loss of any data, for backing up or recovering data and/or settings even during a warranty period. We recommend that you make your own backup data or take notes.

Help for Users in Europe

Check your Pan-European Warranty Document for information on how to contact Epson support.

Help for Users in Taiwan

Contacts for information, support, and services are:

World Wide Web

http://www.epson.com.tw

Information on product specifications, drivers for download, and products enquiry are available.

Epson HelpDesk

Phone: +886-2-2165-3138

Our HelpDesk team can help you with the following over the phone:

❏ Sales enquiries and product information

❏ Product usage questions or problems

❏ Enquiries on repair service and warranty

Repair service center:

http://www.tekcare.com.tw/branchMap.page

TekCare corporation is an authorized service center for Epson Taiwan Technology & Trading Ltd.

Help for Users in Australia

Epson Australia wishes to provide you with a high level of customer service. In addition to your product manuals, we provide the following sources for obtaining information:

Internet URL

http://www.epson.com.au

Access the Epson Australia World Wide Web pages. Worth taking your modem here for the occasional surf! The site provides a download area for drivers, Epson contact points, new product information and technical support (e-mail).

Epson Helpdesk

Phone: 1300-361-054

Epson Helpdesk is provided as a final backup to make sure our clients have access to advice. Operators on the Helpdesk can aid you in installing, configuring and operating your Epson product. Our Pre-sales Helpdesk staff can provide literature on new Epson products and advise where the nearest dealer or service agent is located. Many types of queries are answered here.

We encourage you to have all the relevant information on hand when you ring. The more information you prepare, the faster we can help solve the problem. This information includes your Epson product manuals, type of computer, operating system, application programs, and any information you feel is required.

Transportation of Product

Epson recommends retaining product packaging for future transportation.

Help for Users in New Zealand

Epson New Zealand wishes to provide you with a high level of customer service. In addition to your product documentation, we provide the following sources for obtaining information:

Internet URL

http://www.epson.co.nz

Access the Epson New Zealand World Wide Web pages. Worth taking your modem here for the occasional surf! The site provides a download area for drivers, Epson contact points, new product information and technical support (e-mail).

Epson Helpdesk

Phone: 0800 237 766

Epson Helpdesk is provided as a final backup to make sure our clients have access to advice. Operators on the Helpdesk can aid you in installing, configuring and operating your Epson product. Our Pre-sales Helpdesk staff can provide literature on new Epson products and advise where the nearest dealer or service agent is located. Many types of queries are answered here.

We encourage you to have all the relevant information on hand when you ring. The more information you prepare, the faster we can help solve the problem. This information includes your Epson product documentation, type of computer, operating system, application programs, and any information you feel is required.

Transportation of Product

Epson recommends retaining product packaging for future transportation.

Help for Users in Singapore

Sources of information, support, and services available from Epson Singapore are:

World Wide Web

http://www.epson.com.sg

Information on product specifications, drivers for download, Frequently Asked Questions (FAQ), Sales Enquiries, and Technical Support via e-mail are available.

Epson HelpDesk

Toll Free: 800-120-5564

Our HelpDesk team can help you with the following over the phone:

❏ Sales enquiries and product information

❏ Product usage questions or problem troubleshooting

❏ Enquiries on repair service and warranty

Help for Users in Thailand

Contacts for information, support, and services are:

World Wide Web

http://www.epson.co.th

Information on product specifications, drivers for download, Frequently Asked Questions (FAQ), and e-mail are available.

Epson Call Centre

Phone: 66-2460-9699

Email: support@eth.epson.co.th

Our Call Centre team can help you with the following over the phone:

❏ Sales enquiries and product information

❏ Product usage questions or problems

❏ Enquiries on repair service and warranty

Help for Users in Vietnam

Contacts for information, support, and services are:

Epson Service Center

65 Truong Dinh Street, District 1, Ho Chi Minh City, Vietnam.

Phone(Ho Chi Minh City): 84-8-3823-9239, 84-8-3825-6234

29 Tue Tinh, Quan Hai Ba Trung, Hanoi City, Vietnam

Phone(Hanoi City): 84-4-3978-4785, 84-4-3978-4775

Help for Users in Indonesia

Contacts for information, support, and services are:

World Wide Web

http://www.epson.co.id

❏ Information on product specifications, drivers for download

❏ Frequently Asked Questions (FAQ), Sales Enquiries, questions through e-mail

Epson Hotline

Phone: +62-1500-766

Fax: +62-21-808-66-799

Our Hotline team can help you with the following over the phone or fax:

❏ Sales enquiries and product information

❏ Technical support

Epson Service Center

Province	Company Name	Address	Phone E-mail
JAKARTA	Epson Sales and Service Jakarta (SUDIRMAN)	Wisma Keiai Lt. 1 Jl. Jenderal Sudirman Kav. 3 Jakarta Pusat - DKI JAKARTA 10220	021-5724335 ess@epson-indonesia.co.id ess.support@epson-indonesia.co.id
SERPONG	Epson Sales and Service Serpong	Ruko Melati Mas Square Blok A2 No.17 Serpong-Banten	082120090084 / 082120090085 esstag@epson-indonesia.co.id esstag.support@epson-indonesia.co.id

Province	Company Name	Address	Phone E-mail
SEMARANG	Epson Sales and Service Semarang	Komplek Ruko Metro Plaza Block C20 Jl. MT Haryono No. 970 Semarang -JAWA TENGAH	024 8313807 / 024 8417935 esssmg@epson-indonesia.co.id esssmg.support@epson-indonesia.co.id
JAKARTA	Epson Sales and Service Jakarta (MANGGA DUA)	Ruko Mall Mangga Dua No. 48 Jl. Arteri Mangga Dua, Jakarta Utara - DKI JAKARTA	021 623 01104 jkt-technical1@epson-indonesia.co.id jkt-admin@epson-indonesia.co.id
BANDUNG	Epson Sales and Service Bandung	Jl. Cihampelas No. 48 A Bandung Jawa Barat 40116	022 420 7033 bdg-technical@epson-indonesia.co.id bdg-admin@epson-indonesia.co.id
MAKASSAR	Epson Sales and Service Makassar	Jl. Cendrawasih NO. 3A, kunjung mae, mariso, MAKASSAR - SULSEL 90125	0411- 8911071 mksr-technical@epson-indonesia.co.id mksr-admin@epson-indonesia.co.id
MEDAN	Epson Service Center Medan	Jl. Bambu 2 Komplek Graha Niaga Nomor A-4, Medan - SUMUT	061- 42066090 / 42066091 mdn-technical@epson-indonesia.co.id mdn-adm@epson-indonesia.co.id
PALEMBANG	Epson Service Center Palembang	Jl. H.M Rasyid Nawawi No. 249 Kelurahan 9 Ilir Palembang Sumatera Selatan	0711 311 330 escplg.support@epson-indonesia.co.id
PEKANBARU	Epson Service Center PekanBaru	Jl. Tuanku Tambusai No. 459 A Kel. Tangkerang barat Kec Marpoyan damai Pekanbaru - Riau 28282	0761- 8524695 pkb-technical@epson-indonesia.co.id pkb-admin@epson-indonesia.co.id
PONTIANAK	Epson Service Center Pontianak	Komp. A yani Sentra Bisnis G33, Jl. Ahmad Yani - Pontianak Kalimantan Barat	0561- 735507 / 767049 pontianak-technical@epson-indonesia.co.id pontianak-admin@epson-indonesia.co.id
SAMARINDA	Epson Service Center Samarinda	Jl. KH. Wahid Hasyim (M. Yamin) Kelurahan Sempaja Selatan Kecamatan Samarinda UTARA - SAMARINDA - KALTIM	0541 7272 904 escsmd@epson-indonesia.co.id escsmd.support@epson-indonesia.co.id
SURABAYA	Epson Sales & Service Surabaya (barat)	Jl. Haji Abdul Wahab Saimin, Ruko Villa Bukit Mas RM-11, Kec. Dukuh Pakis, Surabaya - 60225	031- 5120994 sby-technical@epson-indonesia.co.id sby-admin@epson-indonesia.co.id
YOGYAKARTA	Epson Service Center Yogyakarta	YAP Square, Block A No. 6 Jl. C Simanjutak Yogyakarta - DIY	0274 581 065 ygy-technical@epson-indonesia.co.id ygy-admin@epson-indonesia.co.id
JEMBER	Epson Service Center Jember	JL. Panglima Besar Sudirman Ruko no.1D Jember-Jawa Timur (Depan Balai Penelitian & Pengolahan Kakao)	0331- 488373 / 486468 jmr-admin@epson-indonesia.co.id jmr-technical@epson-indonesia.co.id

Province	Company Name	Address	Phone E-mail
MANADO	EPSON SALES AND SERVICE Manado	Jl. Piere Tendean Blok D No 4 Kawasan Mega Mas Boulevard - Manado 95111	0431- 8805896 MND-ADMIN@EPSON-INDONESIA.CO.ID MND-TECHNICAL@EPSON-INDONESIA.CO.ID
CIREBON	EPSON SERVICE CENTER Cirebon	Jl. Tuparev No. 04 (Depan Hotel Apita) Cirebon, JAWA BARAT	0231– 8800846 cbn-technical@epson-indonesia.co.id
CIKARANG	EPSON SALES AND SERVICE CIKARANG	Ruko Metro Boulevard B1 Jababeka cikarang - Jawa Barat,	021- 89844301 / 29082424 ckg-admin@epson-indonesia.co.id ckg-technical@epson-indonesia.co.id
MADIUN	EPSON SERVICE CENTER MADIUN	Jl. Diponegoro No.56, MADIUN - JAWA TIMUR	0351- 4770248 mun-admin@epson-indonesia.co.id mun-technical@epson-indonesia.co.id
PURWOKERTO	EPSON SALES AND SERVICE Purwokerto	Jl. Jendral Sudirman No. 4 Kranji Purwokerto - JAWA TENGAH	0281- 6512213 pwt-admin@epson-indonesia.co.id pwt-technical@epson-indonesia.co.id
BOGOR	EPSON SALES AND SERVICE Bogor	Jl.Pajajaran No 15B Kel Bantarjati Kec Bogor Utara - JAWA BARAT 16153	0251- 8310026 bgr-admin@epson-indonesia.co.id bgr-technical@epson-indonesia.co.id
SERANG	EPSON SERVICE CENTER Serang	Jl. Ahmad Yani No.45C, SERANG - BANTEN	0254- 7912503 srg-admin@epson-indonesia.co.id srg-technical@epson-indonesia.co.id
PALU	EPSON SALES AND SERVICE Palu	Jl. Juanda No. 58, Palu - Sulteng	0451- 4012 881 plw-admin@epson-indonesia.co.id plw-technical@epson-indonesia.co.id
BANJARMASIN	EPSON SERVICE CENTER BANJARMASIN	Jl. Gatot Soebroto NO. 153 BANJARMASIN - KALSEL 70235	0511- 6744135 (TEKNISI) / 3266321(ADMIN) bdj-admin@epson-indonesia.co.id bdj-technical@epson-indonesia.co.id
DENPASAR	EPSON SALES AND SERVICE Denpasar	JL. MAHENDRADATA NO. 18, DENPASAR - BALI	0361- 3446699 / 9348428 dps-admin@epson-indonesia.co.id dps-technical@epson-indonesia.co.id
JAKARTA	EPSON SALES AND SERVICE CILANDAK	CIBIS Business Park Tower 9 LT. MEZZANINE, Jalan TB Simatupang No.2, Jakarta Selatan - DKI JAKARTA 12560	021- 80866777 esscibis.support1@epson-indonesia.co.id esscibis.support2@epson-indonesia.co.id esscibis.admin@epson-indonesia.co.id esscibis.sales@epson-indonesia.co.id

Province	Company Name	Address	Phone E-mail
SURABAYA	EPSON SALES AND SERVICE SURABAYA (GUBENG)	JL. RAYA GUBENG NO. 62, SURABAYA - JAWA TIMUR	031- 99444940 / 99446299 / 99446377 esssby@epson-indonesia.co.id esssby.support@epson-indonesia.co.id
AMBON	EPSON SERVICE CENTER AMBON	Jl. Diponegoro No.37 (Samping Bank Mandiri Syariah) Kel.Ahusen, Kec.Sirimau - Ambon 97127	-

For other cities not listed here, call the Hot Line: 08071137766.

Help for Users in Hong Kong

To obtain technical support as well as other after-sales services, users are welcome to contact Epson Hong Kong Limited.

Internet Home Page

http://www.epson.com.hk

Epson Hong Kong has established a local home page in both Chinese and English on the Internet to provide users with the following information:

❏ Product information

❏ Answers to Frequently Asked Questions (FAQs)

❏ Latest versions of Epson product drivers

Technical Support Hotline

You can also contact our technical staff at the following telephone and fax numbers:

Phone: 852-2827-8911

Fax: 852-2827-4383

Help for Users in Malaysia

Contacts for information, support, and services are:

World Wide Web

http://www.epson.com.my

❏ Information on product specifications, drivers for download

❏ Frequently Asked Questions (FAQ), Sales Enquiries, questions through e-mail

Epson Call Centre

Phone: 1800-81-7349 (Toll Free)

Email: websupport@emsb.epson.com.my

❏ Sales enquiries and product information

❏ Product usage questions or problems

❏ Enquiries on repair services and warranty

Head Office

Phone: 603-56288288

Fax: 603-5628 8388/603-5621 2088

Help for Users in India

Contacts for information, support, and services are:

World Wide Web

http://www.epson.co.in

Information on product specifications, drivers for download, and products enquiry are available.

Helpline

❏ Service, product information, and ordering consumables (BSNL Lines)

Toll-free number: 18004250011

Accessible 9am to 6pm, Monday through Saturday (Except public holidays)

❏ Service (CDMA & Mobile Users)

Toll-free number: 186030001600

Accessible 9am to 6pm, Monday through Saturday (Except public holidays)

Help for Users in the Philippines

To obtain technical support as well as other after sales services, users are welcome to contact the Epson Philippines Corporation at the telephone, fax numbers and e-mail address below:

World Wide Web

http://www.epson.com.ph

Information on product specifications, drivers for download, Frequently Asked Questions (FAQ), and E-mail Enquiries are available.

Epson Philippines Customer Care

Toll Free: (PLDT) 1-800-1069-37766

Toll Free: (Digital) 1-800-3-0037766

Metro Manila: (632) 8441 9030

Web Site: https://www.epson.com.ph/contact

E-mail: customercare@epc.epson.com.ph

Accessible 9am to 6pm, Monday through Saturday (Except public holidays)

Our Customer Care team can help you with the following over the phone:

❏ Sales enquiries and product information

❏ Product usage questions or problems

❏ Enquiries on repair service and warranty

Epson Philippines Corporation

Trunk Line: +632-706-2609

Fax: +632-706-2663