EPSON
EXCEED YOUR VISION

XP-342 343 345 Series

User's Guide

NPD5449-02 EN

Copyright

No part of this publication may be reproduced, stored in a retrieval system, or transmitted in any form or by any means, electronic, mechanical, photocopying, recording, or otherwise, without the prior written permission of Seiko Epson Corporation. No patent liability is assumed with respect to the use of the information contained herein. Neither is any liability assumed for damages resulting from the use of the information herein. The information contained herein is designed only for use with this Epson product. Epson is not responsible for any use of this information as applied to other products.

Neither Seiko Epson Corporation nor its affiliates shall be liable to the purchaser of this product or third parties for damages, losses, costs, or expenses incurred by the purchaser or third parties as a result of accident, misuse, or abuse of this product or unauthorized modifications, repairs, or alterations to this product, or (excluding the U.S.) failure to strictly comply with Seiko Epson Corporation's operating and maintenance instructions.

Seiko Epson Corporation and its affiliates shall not be liable for any damages or problems arising from the use of any options or any consumable products other than those designated as Original Epson Products or Epson Approved Products by Seiko Epson Corporation.

Seiko Epson Corporation shall not be held liable for any damage resulting from electromagnetic interference that occurs from the use of any interface cables other than those designated as Epson Approved Products by Seiko Epson Corporation.

© 2018 Seiko Epson Corporation. All rights reserved.

The contents of this manual and the specifications of this product are subject to change without notice.

Trademarks

- EPSON® is a registered trademark, and EPSON EXCEED YOUR VISION or EXCEED YOUR VISION is a trademark of Seiko Epson Corporation.
- PRINT Image Matching™ and the PRINT Image Matching logo are trademarks of Seiko Epson Corporation. Copyright © 2001 Seiko Epson Corporation. All rights reserved.
- Epson Scan 2 software is based in part on the work of the Independent JPEG Group.
- libtiff

  Copyright © 1988-1997 Sam Leffler

  Copyright © 1991-1997 Silicon Graphics, Inc.

  Permission to use, copy, modify, distribute, and sell this software and its documentation for any purpose is hereby granted without fee, provided that (i) the above copyright notices and this permission notice appear in all copies of the software and related documentation, and (ii) the names of Sam Leffler and Silicon Graphics may not be used in any advertising or publicity relating to the software without the specific, prior written permission of Sam Leffler and Silicon Graphics.

  THE SOFTWARE IS PROVIDED "AS-IS" AND WITHOUT WARRANTY OF ANY KIND, EXPRESS, IMPLIED OR OTHERWISE, INCLUDING WITHOUT LIMITATION, ANY WARRANTY OF MERCHANTABILITY OR FITNESS FOR A PARTICULAR PURPOSE.

  IN NO EVENT SHALL SAM LEFFLER OR SILICON GRAPHICS BE LIABLE FOR ANY SPECIAL, INCIDENTAL, INDIRECT OR CONSEQUENTIAL DAMAGES OF ANY KIND, OR ANY DAMAGES WHATSOEVER RESULTING FROM LOSS OF USE, DATA OR PROFITS, WHETHER OR NOT ADVISED OF THE POSSIBILITY OF DAMAGE, AND ON ANY THEORY OF LIABILITY, ARISING OUT OF OR IN CONNECTION WITH THE USE OR PERFORMANCE OF THIS SOFTWARE.
- SDXC Logo is a trademark of SD-3C, LLC.

- Microsoft®, Windows®, and Windows Vista® are registered trademarks of Microsoft Corporation.
- Apple, Macintosh, Mac OS, OS X, Bonjour, Safari, iPad, iPhone, iPod touch, and iTunes are trademarks of Apple Inc., registered in the U.S. and other countries. AirPrint and the AirPrint logo are trademarks of Apple Inc.
- Google Cloud Print™, Chrome™, Chrome OS™, and Android™ are trademarks of Google Inc.
- Adobe and Adobe Reader are either registered trademarks or trademarks of Adobe Systems Incorporated in the United States and/or other countries.
- Intel® is a registered trademark of Intel Corporation.
- General Notice: Other product names used herein are for identification purposes only and may be trademarks of their respective owners. Epson disclaims any and all rights in those marks.

Contents

Copyright

Trademarks

About This Manual

Introduction of Manuals. 8
Marks and Symbols. 8
Descriptions Used in this Manual. 9
Operating System References. 9

Important Instructions

Safety Instructions. 10
Printer Advisories and Warnings. 11
Advisories and Warnings for Setting Up/ Using the Printer. 11
Advisories and Warnings for Using the Printer with a Wireless Connection. 12
Advisories and Warnings for Using Memory Cards. 12
Advisories and Warnings for Using the LCD Screen. 12
Protecting Your Personal Information. 12

Printer Basics

Part Names and Functions. 13
Control Panel. 15
Buttons. 15
Guide to the LCD Screen. 15

Network Settings

Network Connection Types. 19
Wi-Fi Connection. 19
Wi-Fi Direct (Simple AP) Connection. 19
Connecting to a Computer. 20
Connecting to a Smart Device. 22
Making Wi-Fi Settings from the Control Panel. 22
Making Wi-Fi Settings Manually. 22
Making Wi-Fi Settings by Push Button Setup. 23
Making Wi-Fi Settings by PIN Code Setup (WPS). 24
Making Wi-Fi Direct (Simple AP) Connection Settings. 25
Checking the Network Connection Status. 25
Checking the Network Status Using Network Icon. 25
Printing a Network Connection Report. 26
Printing a Network Status Sheet. 30
Replacing or Adding New Access Points. 30
Changing the Connection Method to a Computer. 31
Disabling Wi-Fi from the Control Panel. 32
Disconnecting Wi-Fi Direct (Simple AP) connection from the Control Panel. 32
Restoring the Network Settings from the Control Panel. 33

Loading Paper

Paper Handling Precautions. 34
Available Paper and Capacities. 35
List of Paper Types. 36
Loading Paper in the Rear Paper Feed. 36

Placing Originals

Placing Originals on the Scanner Glass. 40
How to Place Various Originals. 41
Placing Originals for 2-Up Layout. 41
Placing a Double-Page Spread for 2-Up Layout. 41
Placing Multiple Photos for Scanning. 42

Inserting a Memory Card

Supported Memory Cards. 43
Inserting and Removing a Memory Card. 43

Printing

Printing from the Control Panel. 45
Printing Photos by Selecting from a Memory Card. 45
Printing Lined Paper, Calendars, and Original Writing Paper. 46
DPOF Printing. 47
Menu Options for Print Photos Mode. 47
Printing from a Computer. 47
Printing Basics - Windows. 47
Printing Basics - Mac OS X. 49
Printing on 2-Sides (for Windows only). 51
Printing Several Pages on One Sheet. 52
Printing to Fit the Paper Size. 53

Printing Multiple Files Together (for Windows Only). 55
Printing One Image on Multiple Sheets to Create a Poster (for Windows Only). 56
Printing Using Advanced Features. 62
Printing Photos Using Epson Easy Photo Print. . 64
Printing from Smart Devices. 65
Using Epson iPrint. 65
Using AirPrint. 67
Canceling Printing. 67
Canceling Printing - Printer Button. 67
Canceling Printing - Windows. 68
Canceling Printing - Mac OS X. 68

Copying

Menu Options for Copy Mode. 69

Scanning

Scanning Using the Control Panel. 72
Scanning to a Computer. 72
Scanning to a Computer (WSD). 73
Scanning from a Computer. 75
Scanning Using Epson Scan 2. 75
Scanning from Smart Devices. 81
Installing Epson iPrint. 81
Scanning Using Epson iPrint. 81

Replacing Ink Cartridges

Checking the Ink Levels. 83
Checking the Ink Levels - Control Panel. 83
Checking the Ink Levels - Windows. 83
Checking the Ink Levels - Mac OS X. 83
Ink Cartridge Codes. 83
Ink Cartridge Handling Precautions. 84
Replacing Ink Cartridges. 86
Temporarily Printing with Black Ink. 89
Temporarily Printing with Black Ink - Windows. 91
Temporarily Printing with Black Ink - Mac OS X. 92
Conserving Black Ink when the Black Ink Is Low (for Windows Only). 93

Maintaining the Printer

Checking and Cleaning the Print Head. 94
Checking and Cleaning the Print Head - Control Panel. 94
Checking and Cleaning the Print Head - Windows. 95
Checking and Cleaning the Print Head - Mac OS X. 95
Aligning the Print Head. 95
Aligning the Print Head - Control Panel. 96
Aligning the Print Head - Windows. 96
Aligning the Print Head - Mac OS X. 97
Cleaning the Paper Path. 97
Cleaning the Scanner Glass. 98
Saving Power. 98
Saving Power - Control Panel. 98
Saving Power - Windows. 99
Saving Power - Mac OS X. 99

Menu Options for Setup Mode

Menu Options for Ink Levels. 100
Menu Options for Maintenance. 100
Menu Options for Printer Setup. 101
Menu Options for Network Settings. 101
Menu Options for Epson Connect Services. 102
Menu Options for Google Cloud Print Services. . . 103
Menu Options for File Sharing. 103
Menu Options for Firmware Update. 104
Menu Options for Restore Default Settings. 104

Network Service and Software Information

Epson Connect Service. 105
Web Config. 105
Running Web Config on a Web Browser. 106
Running Web Config on Windows. 106
Running Web Config on Mac OS X. 106
Windows Printer Driver. 107
Guide to Windows Printer Driver. 108
Making Operation Settings for the Windows Printer Driver. 110
Mac OS X Printer Driver. 110
Guide to Mac OS X Printer Driver. 111
Making Operation Settings for the Mac OS X Printer Driver. 112
Epson Scan 2 (Scanner Driver). 113
Epson Event Manager. 113
Epson Easy Photo Print. 114
E-Web Print (for Windows Only). 115
Easy Photo Scan. 115

EPSON Software Updater. 115
Uninstalling Applications. 116
Uninstalling Applications - Windows. 116
Uninstalling Applications - Mac OS X. 117
Installing Applications. 117
Updating Applications and Firmware. 118
Updating the Printer's Firmware using the Control Panel. 118

Solving Problems

Checking the Printer Status. 120
Checking Error Codes on the LCD Screen. 120
Checking the Printer Status - Windows. 121
Checking Printer Status - Mac OS X. 121
Removing Jammed Paper. 122
Removing Jammed Paper from the Rear Paper Feed. 122
Removing Jammed Paper from the Output Tray 122
Removing Jammed Paper from Inside the Printer. 123
Paper Does Not Feed Correctly. 124
Paper Jams. 124
Paper Feeds at a Slant. 124
Several Sheets of Paper are Fed at a Time. 125
No Paper Feeds. 125
Paper Out Error Occurs. 125
Power and Control Panel Problems. 125
Power Does Not Turn On. 125
Power Does Not Turn Off. 125
LCD Screen Gets Dark. 125
Cannot Print from a Computer. 126
When You Cannot Make Network Settings. 126
Cannot Connect from Devices Even Though Network Settings are No Problem. 127
Checking the SSID Connected to the Printer. . . 128
Checking the SSID for the Computer. 129
Suddenly the Printer Cannot Print over a Network Connection. 129
Suddenly the Printer Cannot Print Using a USB Connection. 130
Cannot Print from an iPhone or iPad. 130
Printing is Paused. 131
Printout Problems. 131
Printout is Scuffed or Color is Missing. 131
Banding or Unexpected Colors Appear. 131
Colored Banding Appears at Intervals of Approximately 2.5 cm. 132
Blurry Prints, Vertical Banding, or Misalignment. 132
Print Quality is Poor. 133
Paper Is Smeared or Scuffed. 134
Printed Photos are Sticky. 134
Images or Photos are Printed in Unexpected Colors. 134
Colors Differ from What You See on the Display. 135
Cannot Print Without Margins. 135
Edges of the Image are Cropped During Borderless Printing. 135
The Position, Size, or Margins of the Printout Are Incorrect. 135
Printed Characters Are Incorrect or Garbled. . . 136
The Printed Image Is Inverted. 136
Mosaic-Like Patterns in the Prints. 136
Uneven Colors, Smears, Dots, or Straight Lines Appear in the Copied Image. 136
Moiré (Cross-Hatch) Patterns Appear in the Copied Image. 137
An Image of the Reverse Side of the Original Appears in the Copied Image. 137
The Printout Problem Could Not be Cleared. . . 137
Other Printing Problems. 137
Printing Is Too Slow. 137
Printing Slows Down Dramatically During Continuous Printing. 138
Cannot Cancel Printing from a Computer Running Mac OS X v10.6.8. 138
Cannot Start Scanning. 138
Cannot Start Scanning when Using the Control Panel. 139
Scanned Image Problems. 139
Uneven Colors, Dirt, Spots, and so on Appear when Scanning from the Scanner Glass. 139
The Image Quality Is Rough. 140
Offset Appears in the Background of Images. . . 140
Text is Blurred. 140
Moiré Patterns (Web-Like Shadows) Appear. . . 141
Cannot Scan the Correct Area on the Scanner Glass. 141
Cannot Preview in Thumbnail. 141
Text is Not Recognized Correctly when Saving as a Searchable PDF. 142
Cannot Solve Problems in the Scanned Image. . 142
Other Scanning Problems. 143
Scanning Is Too Slow. 143
Scanning Stops when Scanning to PDF/ Multi-TIFF. 143
Other Problems. 143

Slight Electric Shock when Touching the Printer. 143
Operation Sounds Are Loud. 143
Cannot Save the Data to a Memory Card. 144
Application Is Blocked by a Firewall (for Windows Only). 144
"?" Is Displayed on the Photo Selection Screen. . 144

Appendix

Technical Specifications. 145
Printer Specifications. 145
Scanner Specifications. 146
Interface Specifications. 146
Network Function List. 146
Wi-Fi Specifications. 148
Security Protocol. 148
Supported Third Party Services. 148
External Storage Device Specifications. 149
Dimensions. 150
Electrical Specifications. 150
Environmental Specifications. 150
System Requirements. 151
Regulatory Information. 151
Standards and Approvals. 151
Restrictions on Copying. 152
Transporting the Printer. 152
Accessing a Memory Card From a Computer. 154
Where to Get Help. 155
Technical Support Web Site. 155
Contacting Epson Support. 155

About This Manual

Introduction of Manuals

The following manuals are supplied with your Epson printer. As well as the manuals, see the help included in the various Epson software applications.

❏ Start Here (paper manual)

Provides you with information on setting up the printer, installing the software, using the printer, solving problems, and so on.

❏ User's Guide (digital manual)

This manual. Provides overall information and instructions on using the printer, on network settings when using the printer on a network, and on solving problems.

You can obtain the latest versions of the above manuals with the following methods.

❏ Paper manual

Visit the Epson Europe support website at http://www.epson.eu/Support, or the Epson worldwide support website at http://support.epson.net/.

❏ Digital manual

Start EPSON Software Updater on your computer. EPSON Software Updater checks for available updates of Epson software applications and the digital manuals, and allows you to download the latest ones.

Related Information

➡ "EPSON Software Updater" on page 115

Marks and Symbols

⚠ ***Caution:***

Instructions that must be followed carefully to avoid bodily injury.

Important:

Instructions that must be observed to avoid damage to your equipment.

Note:
Provides complementary and reference information.

➡ Related Information

Links to related sections.

Descriptions Used in this Manual

- Screenshots of the printer driver and the Epson Scan 2 (scanner driver) screens are from Windows 10 or Mac OS X v10.11.x. The content displayed on the screens varies depending on the model and situation.
- Illustrations of the printer used in this manual are examples only. Although there may be slight differences depending on the model, the method of operation is the same.
- Some of the menu items on the LCD screen vary depending on the model and settings.

Operating System References

Windows

In this manual, terms such as "Windows 10", "Windows 8.1", "Windows 8", "Windows 7", "Windows Vista", and "Windows XP" refer to the following operating systems. Additionally, "Windows" is used to refer to all versions.

- Microsoft® Windows® 10 operating system
- Microsoft® Windows® 8.1 operating system
- Microsoft® Windows® 8 operating system
- Microsoft® Windows® 7 operating system
- Microsoft® Windows Vista® operating system
- Microsoft® Windows® XP operating system
- Microsoft® Windows® XP Professional x64 Edition operating system

Mac OS X

In this manual, "Mac OS X v10.11.x" refers to OS X El Capitan, "Mac OS X v10.10.x" refers to OS X Yosemite, "Mac OS X v10.9.x" refers to OS X Mavericks, and "Mac OS X v10.8.x" refers to OS X Mountain Lion. Additionally, "Mac OS X" is used to refer to "Mac OS X v10.11.x", "Mac OS X v10.10.x", "Mac OS X v10.9.x", "Mac OS X v10.8.x", "Mac OS X v10.7.x", and "Mac OS X v10.6.8".

Important Instructions

Safety Instructions

Read and follow these instructions to ensure safe use of this printer. Make sure you keep this manual for future reference. Also, be sure to follow all warnings and instructions marked on the printer.

- ❏ Some of the symbols used on your printer are to ensure safety and proper use of the printer. Visit the following Web site to learn the meaning of the symbols.

  http://support.epson.net/symbols

- ❏ Use only the power cord supplied with the printer and do not use the cord with any other equipment. Use of other cords with this printer or the use of the supplied power cord with other equipment may result in fire or electric shock.
- ❏ Be sure your AC power cord meets the relevant local safety standard.
- ❏ Never disassemble, modify, or attempt to repair the power cord, plug, printer unit, scanner unit, or options by yourself, except as specifically explained in the printer's manuals.
- ❏ Unplug the printer and refer servicing to qualified service personnel under the following conditions:

  The power cord or plug is damaged; liquid has entered the printer; the printer has been dropped or the casing damaged; the printer does not operate normally or exhibits a distinct change in performance. Do not adjust controls that are not covered by the operating instructions.

- ❏ Place the printer near a wall outlet where the plug can be easily unplugged.
- ❏ Do not place or store the printer outdoors, near excessive dirt or dust, water, heat sources, or in locations subject to shocks, vibrations, high temperature or humidity.
- ❏ Take care not to spill liquid on the printer and not to handle the printer with wet hands.
- ❏ Keep the printer at least 22 cm away from cardiac pacemakers. Radio waves from this printer may adversely affect the operation of cardiac pacemakers.
- ❏ If the LCD screen is damaged, contact your dealer. If the liquid crystal solution gets on your hands, wash them thoroughly with soap and water. If the liquid crystal solution gets into your eyes, flush them immediately with water. If discomfort or vision problems remain after a thorough flushing, see a doctor immediately.
- ❏ Be careful when you handle used ink cartridges, as there may be some ink around the ink supply port.
  - ❏ If ink gets on your skin, wash the area thoroughly with soap and water.
  - ❏ If ink gets into your eyes, flush them immediately with water. If discomfort or vision problems continue after a thorough flushing, see a doctor immediately.
  - ❏ If ink gets into your mouth, see a doctor right away.
- ❏ Do not disassemble the ink cartridge; otherwise ink may get into your eyes or on your skin.
- ❏ Do not shake ink cartridges too vigorously and do not drop them. Also, be careful not to squeeze them or tear their labels. Doing so may cause ink leakage.
- ❏ Keep ink cartridges out of the reach of children.

Printer Advisories and Warnings

Read and follow these instructions to avoid damaging the printer or your property. Make sure you keep this manual for future reference.

Advisories and Warnings for Setting Up/Using the Printer

- ❏ Do not block or cover the vents and openings in the printer.
- ❏ Use only the type of power source indicated on the printer's label.
- ❏ Avoid using outlets on the same circuit as photocopiers or air control systems that regularly switch on and off.
- ❏ Avoid electrical outlets controlled by wall switches or automatic timers.
- ❏ Keep the entire computer system away from potential sources of electromagnetic interference, such as loudspeakers or the base units of cordless telephones.
- ❏ The power-supply cords should be placed to avoid abrasions, cuts, fraying, crimping, and kinking. Do not place objects on top of the power-supply cords and do not allow the power-supply cords to be stepped on or run over. Be particularly careful to keep all the power-supply cords straight at the ends and the points where they enter and leave the transformer.
- ❏ If you use an extension cord with the printer, make sure that the total ampere rating of the devices plugged into the extension cord does not exceed the cord's ampere rating. Also, make sure that the total ampere rating of all devices plugged into the wall outlet does not exceed the wall outlet's ampere rating.
- ❏ If you plan to use the printer in Germany, the building installation must be protected by a 10 or 16 amp circuit breaker to provide adequate short-circuit protection and over-current protection for the printer.
- ❏ When connecting the printer to a computer or other device with a cable, ensure the correct orientation of the connectors. Each connector has only one correct orientation. Inserting a connector in the wrong orientation may damage both devices connected by the cable.
- ❏ Place the printer on a flat, stable surface that extends beyond the base of the printer in all directions. The printer will not operate properly if it is tilted at an angle.
- ❏ When storing or transporting the printer, avoid tilting it, placing it vertically, or turning it upside down; otherwise ink may leak.
- ❏ Allow space above the printer so that you can fully raise the document cover.
- ❏ Leave enough space in front of the printer for the paper to be fully ejected.
- ❏ Avoid places subject to rapid changes in temperature and humidity. Also, keep the printer away from direct sunlight, strong light, or heat sources.
- ❏ Do not insert objects through the slots in the printer.
- ❏ Do not put your hand inside the printer during printing.
- ❏ Do not touch the white flat cable inside the printer.
- ❏ Do not use aerosol products that contain flammable gases inside or around the printer. Doing so may cause fire.
- ❏ Do not move the print head by hand; otherwise, you may damage the printer.
- ❏ Be careful not to trap your fingers when closing the scanner unit.
- ❏ Do not press too hard on the scanner glass when placing the originals.
- ❏ Always turn the printer off using the ⏻ button. Do not unplug the printer or turn off the power at the outlet until the ⏻ light stops flashing.

- ❏ Before transporting the printer, make sure that the print head is in the home (far right) position and the ink cartridges are in place.
- ❏ If you are not going to use the printer for a long period, be sure to unplug the power cord from the electrical outlet.

Advisories and Warnings for Using the Printer with a Wireless Connection

- ❏ Radio waves from this printer may negatively affect the operation of medical electronic equipment, causing them to malfunction. When using this printer inside medical facilities or near medical equipment, follow directions from the authorized personnel representing the medical facilities, and follow all posted warnings and directions on the medical equipment.
- ❏ Radio waves from this printer may negatively affect the operation of automatically controlled devices such as automatic doors or fire alarms, and could lead to accidents due to malfunction. When using this printer near automatically controlled devices, follow all posted warnings and directions on these devices.

Advisories and Warnings for Using Memory Cards

- ❏ Do not remove a memory card or turn off the printer while the memory card light is flashing.
- ❏ The methods for using memory cards vary according to card type. Be sure to refer to the manual packaged with your memory card for details.
- ❏ Use only memory cards compatible with the printer.

Related Information

➡ "Supported Memory Card Specifications" on page 149

Advisories and Warnings for Using the LCD Screen

- ❏ The LCD screen may contain a few small bright or dark spots, and because of its features it may have an uneven brightness. These are normal and do not indicate that it is damaged in any way.
- ❏ Only use a dry, soft cloth for cleaning. Do not use liquid or chemical cleaners.
- ❏ The exterior cover of the LCD screen could break if it receives a heavy impact. Contact your dealer if the screen's surface chips or cracks, and do not touch or attempt to remove the broken pieces.

Protecting Your Personal Information

When you give the printer to someone else or dispose of it, erase all the personal information stored in the printer's memory by selecting **Setup** > **Restore Default Settings** > **All Settings** on the control panel.

Printer Basics

Part Names and Functions

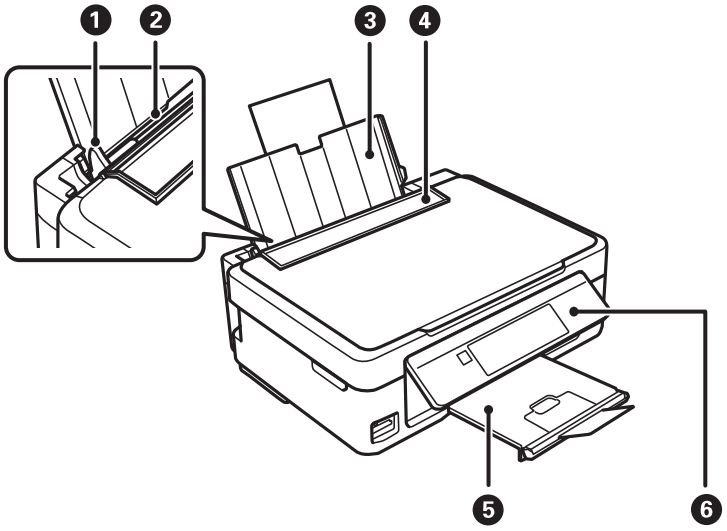

1	Edge guide	Feeds the paper straight into the printer. Slide to the edges of the paper.
2	Rear paper feed	Loads paper.
3	Paper support	Supports loaded paper.
4	Feeder guard	Prevents foreign substance from entering the printer. Usually keep this guard closed.
5	Output tray	Holds the ejected paper. Before printing, raise the stopper to prevent the ejected paper from falling off the tray.
6	Control panel	Operates the printer.

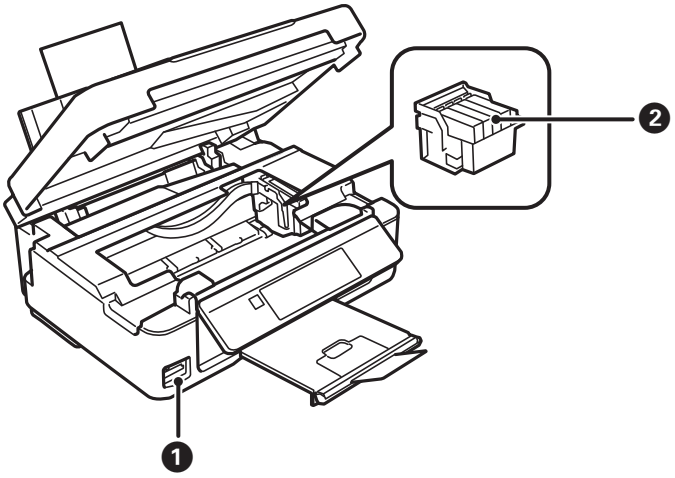

❶	Memory card slot	Insert a memory card.
❷	Ink cartridge holder	Install the ink cartridges. Ink is ejected from the print head nozzles underneath.

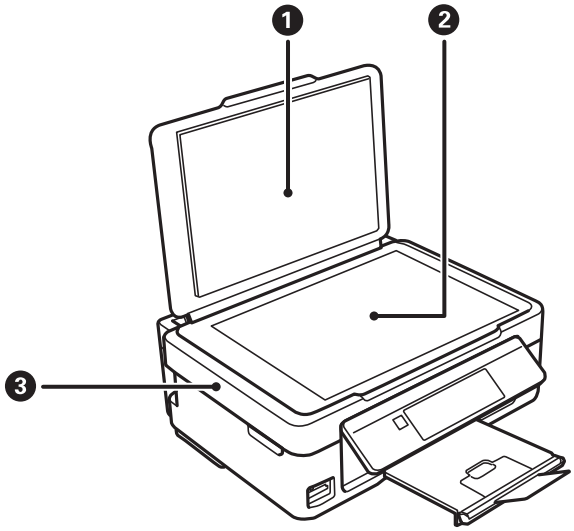

❶	Document cover	Blocks external light while scanning.
❷	Scanner glass	Place the originals.
❸	Scanner unit	Scans placed originals. Open when replacing ink cartridges or removing jammed paper inside the printer.

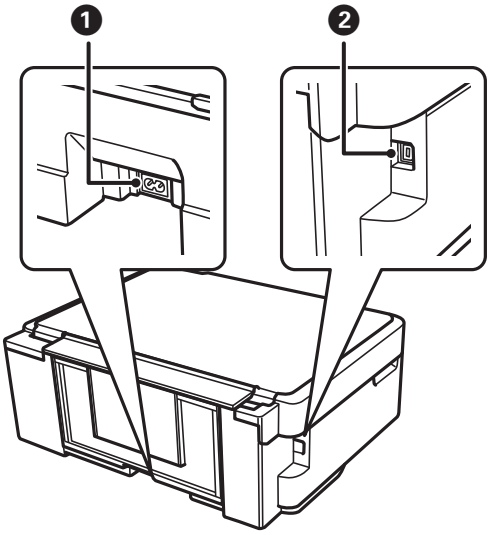

❶	AC inlet	Connects the power cord.
❷	USB port	Connects a USB cable.

Control Panel

You can change the angle of the control panel.

To lower the control panel, squeeze the lever on the back of the panel as shown below.

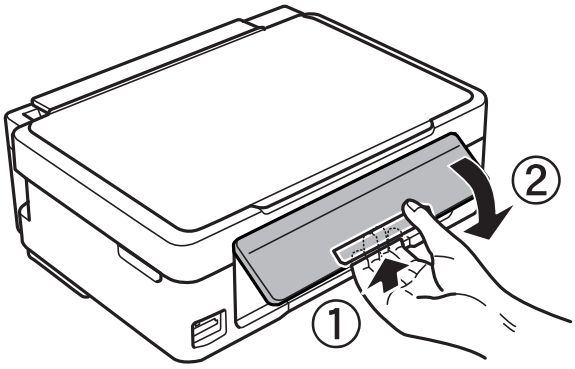

Buttons

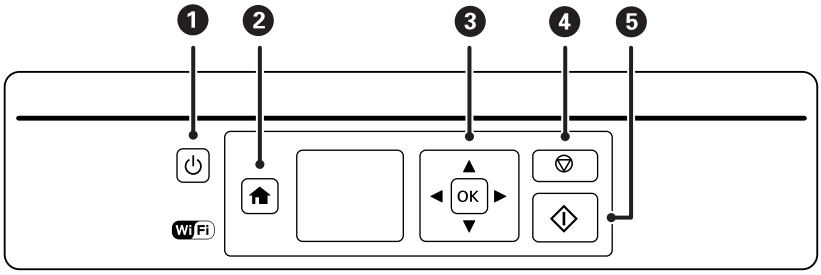

❶	⏻	Turns the printer on or off. Do not turn off while the power light is flashing (while the printer is operating or processing data). Unplug the power cord when the power light is off.
❷	🏠	Displays the home screen.
❸	▲▼◀▶ OK	Use the ▲▼◀▶ buttons to select a menu, and press the OK button to run the selected menu.
❹	▽	Stops the current operation or returns to the previous screen.
❺	◇	Starts an operation such as printing or copying.

Guide to the LCD Screen

Menus and messages are displayed on the LCD screen. Select a menu or setting by pressing the ▲▼◀▶ buttons.

Guide to the Home Screen

The following icons and menus are displayed on the home screen.

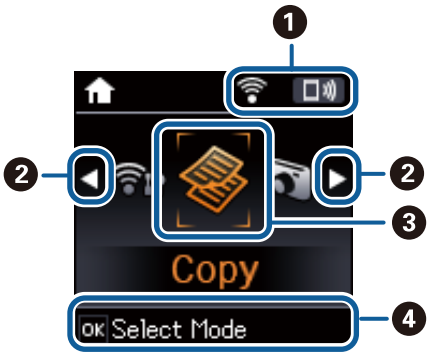

1	Icons that show the network status are displayed.	
		Indicates a problem with the printer's wireless (Wi-Fi) network connection, or that the printer is searching for a wireless (Wi-Fi) network connection.
		Indicates that the printer is connected to a wireless (Wi-Fi) network. The number of bars indicates the signal strength of the connection. The more bars there are, the stronger the connection.
		Indicates that a wireless (Wi-Fi) network is disabled, or that the printer is processing a wireless network connection.
		Indicates that Wi-Fi Direct is enabled.
		Indicates that Wi-Fi Direct is disabled.
2	When ◀ and ▶ are displayed, you can scroll right or left by pressing the ◀ or ▶ button.	
3	Function icons and names are displayed as mode icons.	
	Copy	Enters **Copy** mode that allows you to copy a document.
	Print Photos	Enters **Print Photos** mode that allows you to print photos on your memory card.
	Scan	Enters **Scan** mode that allows you to scan a document or a photo.
	Personal Stationery	Enters **Personal Stationery** mode that allows you to print original items, such as ruled paper and calendars, using the photos on your memory card.
	Quiet Mode	Displays **Quiet Mode** setting that allows you to reduce the noise the printer makes. However, enabling this may reduce print speed. Depending on the paper type and print quality settings you selected, there may be no difference in the printer's noise level. This is a shortcut to the following menu. **Setup** > **Printer Setup** > **Quiet Mode**
	Setup	Enters **Setup** mode that allows you to make maintenance, printer setup, and network settings.
	Wi-Fi Setup	Displays menus that allow you to set up the printer for use on a wireless network. This is a shortcut to the following menu. **Setup** > **Network Settings** > **Wi-Fi Setup**
4	Available buttons are displayed. In this example, you can proceed to the selected menu by pressing the OK button.	

Entering Characters

To enter characters and symbols for network settings from the control panel, use the ▲, ▼, ◀, and ▶ buttons.

Press the ▲ or ▼ button to select the character you want to enter, and then press the ▶ button to move the cursor to the next input position. When you have finished entering characters, press the OK button.

The displayed screen varies depending on the setting items. The following is the screen for entering the password for your Wi-Fi network.

Icons	Descriptions
🏠	Switches the character type. ABC: Uppercase characters abc: Lowercase characters 123: Numbers and symbols
▲▼	Selects the character to be entered.
▶	Moves the cursor to the right.
◀	Deletes a character to the left (backspace).
OK	Enters the selected characters.
⊘	Returns to the previous screen.

Entering the Practice String "13By"

1. Press the 🏠 button twice to switch the character type to **123**.

2. Press the ▲ button twice to select "1".

3. Press the ▶ button once to move the cursor, and then press the ▲ button four times to select "3".

4. Press the ▶ button once to move the cursor, and then press the button to switch the character type to **ABC**. Press the ▲ button twice to select "B".

5. Press the ▶ button once to move the cursor, and then press the button to switch the character type to **abc**. Press the ▼ button twice to select "y".

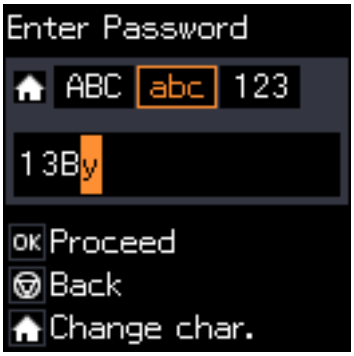

6. Press the OK button.

Network Settings

Network Connection Types

Wi-Fi Connection

Connect the printer and the computer or smart device to the access point. This is the typical connection method for home or office networks where computers are connected by Wi-Fi through the access point.

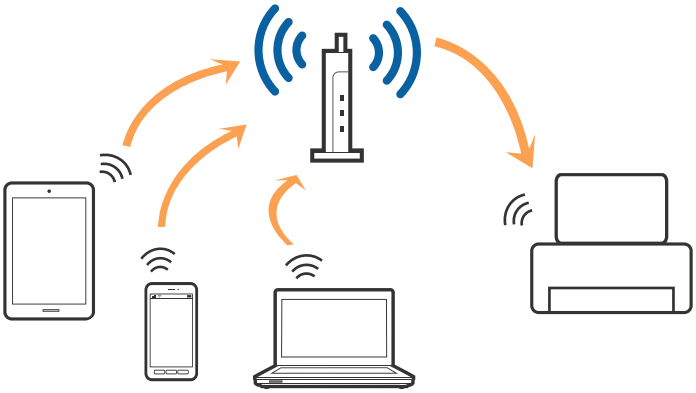

Related Information

➡ "Connecting to a Computer" on page 20

➡ "Connecting to a Smart Device" on page 22

➡ "Making Wi-Fi Settings from the Control Panel" on page 22

Wi-Fi Direct (Simple AP) Connection

Use this connection method when you are not using Wi-Fi at home or at the office, or when you want to connect the printer and the computer or smart device directly. In this mode, the printer acts as an access point and you can connect up to four devices to the printer without having to use a standard access point. However, devices directly connected to the printer cannot communicate with each other through the printer.

Note:
Wi-Fi Direct (Simple AP) connection is a connection method designed to replace Ad Hoc mode.

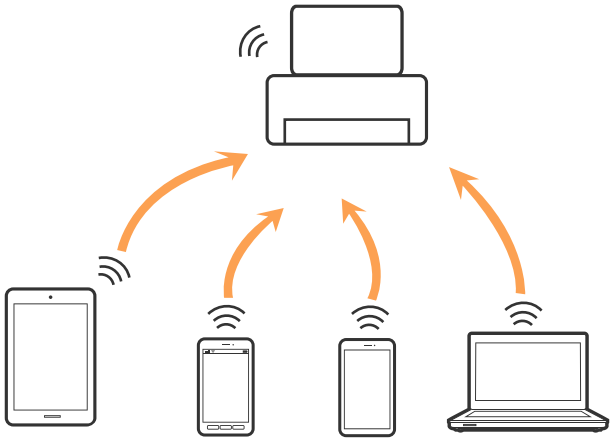

The printer can be connected by Wi-Fi and Wi-Fi Direct (Simple AP) connection simultaneously. However, if you start a network connection in Wi-Fi Direct (Simple AP) connection when the printer is connected by Wi-Fi, the Wi-Fi is temporarily disconnected.

Related Information

➡ "Making Wi-Fi Direct (Simple AP) Connection Settings" on page 25

Connecting to a Computer

We recommend using the installer to connect the printer to a computer. You can run the installer using one of the following methods.

❏ Setting up from the website

Access the following website, and then enter the product name.

http://epson.sn

Go to **Setup**, and then click **Download** in the download and connect part. Click or double-click the downloaded file to run the installer. Follow the on-screen instructions.

❏ Setting up using the software disc (only for the models that come with a software disc and users with computers with disc drives.)

Insert the software disc into the computer, and then follow the on-screen instructions.

Selecting the Connection Methods

Follow the on-screen instructions until the following screen is displayed, and then select the connection method of the printer to the computer.

❏ Windows

Select the connection type and then click **Next**.

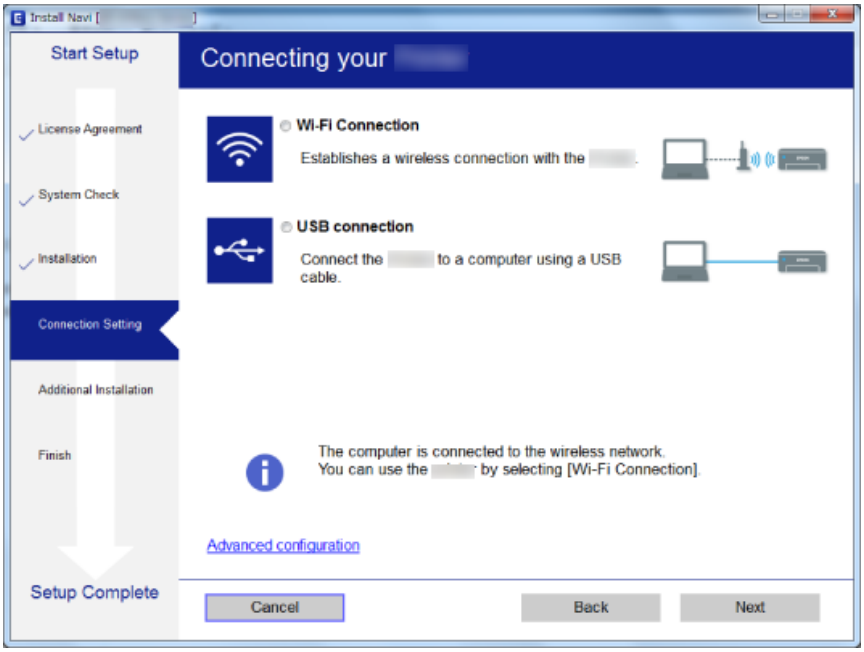

❏ Mac OS X

Select the connection type.

Follow the on-screen instructions. The necessary software is installed.

Connecting to a Smart Device

You can use the printer from a smart device when you connect the printer to the same Wi-Fi network (SSID) as the smart device. To use the printer from a smart device, set up from the following website. Access to the website from the smart device that you want to connect to the printer.

http://epson.sn > **Setup**

Note:
If you want to connect a computer and a smart device to the printer at the same time, we recommend connecting the computer first.

Making Wi-Fi Settings from the Control Panel

You can make network settings from the printer's control panel. After connecting the printer to the network, connect to the printer from the device that you want to use (computer, smart phone, tablet, and so on.)

Related Information

➡ "Making Wi-Fi Settings Manually" on page 22
➡ "Making Wi-Fi Settings by Push Button Setup" on page 23
➡ "Making Wi-Fi Settings by PIN Code Setup (WPS)" on page 24
➡ "Making Wi-Fi Direct (Simple AP) Connection Settings" on page 25

Making Wi-Fi Settings Manually

You can manually set up the information necessary to connect to an access point from the printer's control panel. To set up manually, you need the SSID and password for an access point.

Note:
If you are using an access point with its default settings, the SSID and password are on the label. If you do not know the SSID and password, contact the person who set up the access point, or see the documentation provided with the access point.

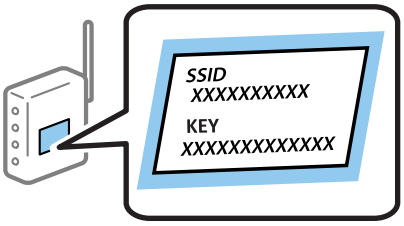

1. Select **Wi-Fi Setup** on the home screen, and then press the OK button.

2. Select **Wi-Fi (Recommended)**, and then press the OK button.

3. Press the OK button.

4. Select **Wi-Fi Setup Wizard**, and then press the OK button.

5. Select the SSID for the access point from printer's control panel, and then press the OK button.

   Note:
   - ❏ *If the SSID you want to connect to is not displayed on the printer's control panel, select **Search Again** to update the list. If it is still not displayed, select **Other SSIDs**, and then enter the SSID directly.*
   - ❏ *If you do not know the SSID, check if it is written on the label of the access point. If you are using the access point with its default settings, use the SSID written on the label.*

6. Enter the password, and then press the OK button.

   Select whether or not you print a network connection report after finishing the settings.

   Note:
   - ❏ *The password is case-sensitive.*
   - ❏ *If you do not know the password, check if it is written on the label of the access point. If you are using the access point with its default settings, use the password written on the label. The password may also be called a "Key", a "Passphrase", and so on.*
   - ❏ *If you do not know the password for the access point, see the documentation provided with the access point, or contact the person who set it up.*
   - ❏ *If you fail to connect, load paper, and then press the ◇ button to print a network connection report.*

Related Information

➡ "Entering Characters" on page 17

➡ "Checking the Network Connection Status" on page 25

➡ "When You Cannot Make Network Settings" on page 126

Making Wi-Fi Settings by Push Button Setup

You can automatically set up a Wi-Fi network by pressing a button on the access point. If the following conditions are met, you can set up by using this method.

- ❏ The access point is compatible with WPS (Wi-Fi Protected Setup).
- ❏ The current Wi-Fi connection was established by pressing a button on the access point.

Note:
If you cannot find the button or you are setting up using the software, see the documentation provided with the access point.

1. Select **Wi-Fi Setup** on the home screen, and then press the OK button.
2. Select **Wi-Fi (Recommended)**, and then press the OK button.
3. Press the OK button.
4. Select **Push Button Setup (WPS)**, and then press the OK button.

5. Hold down the [WPS] button on the access point until the security light flashes.

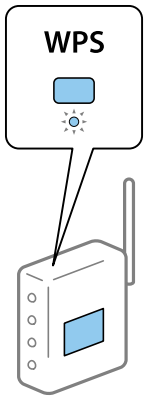

If you do not know where the [WPS] button is, or there are no buttons on the access point, see the documentation provided with your access point for details.

6. Press the OK button on the printer's control panel. Follow the on-screen instruction hereafter.

Note:
If connection fails, restart the access point, move it closer to the printer, and try again. If it still does not work, print a network connection report and check the solution.

Related Information

➡ "Checking the Network Connection Status" on page 25
➡ "When You Cannot Make Network Settings" on page 126

Making Wi-Fi Settings by PIN Code Setup (WPS)

You can connect to an access point by using a PIN code. You can use this method to set up if an access point is capable of WPS (Wi-Fi Protected Setup). Use a computer to enter a PIN code into the access point.

1. Select **Setup** on the home screen, and then press the OK button.

2. Select **Network Settings** and then press the OK button.

3. Select **Wi-Fi Setup** on the home screen and then press the OK button.

4. Select **PIN Code (WPS)** and then press the OK button.

5. Use your computer to enter the PIN code (an eight digit number) displayed on the printer's control panel into the access point within two minutes.

   Note:
   See the documentation provided with your access point for details on entering a PIN code.

6. Press the OK button.

   Setup is complete when the setup completion message is displayed.

   Note:
   If connection fails, restart the access point, move it closer to the printer, and try again. If it still does not work, print a connection report and check the solution.

Related Information

➡ "Checking the Network Connection Status" on page 25
➡ "When You Cannot Make Network Settings" on page 126

Making Wi-Fi Direct (Simple AP) Connection Settings

This method allows you to connect the printer directly to computer or smart devices without an access point. The printer acts as an access point.

> **Important:**
> *When you connect from a computer or smart device to the printer using the Wi-Fi Direct (Simple AP) connection, the printer is connected to the same Wi-Fi network (SSID) as the computer or smart device and the communication is established between them. Since the computer or smart device is automatically connected to the other connectable Wi-Fi network if the printer is turned off, it is not connected to the previous Wi-Fi network again if the printer is turned on. Connect to the printer's SSID for Wi-Fi Direct (Simple AP) connection from the computer or smart device again. If you do not want to connect every time you turn the printer on or off, we recommend using Wi-Fi network by connecting the printer to an access point.*

1. Select **Wi-Fi Setup** on the home screen, and then press the OK button.
2. Select **Wi-Fi Direct**, and then press the OK button.
3. Press the OK button.
4. Press the OK button to start the setup.
5. Press the OK button.
6. Check the SSID and password displayed on the printer's control panel. On the network connection screen of the computer or smart device, select the SSID shown on the printer's control panel to connect.
7. Enter the password displayed on the printer's control panel on the computer or smart device.
8. After the connection is established, press the OK button on the printer's control panel.
9. Press the OK button.

Related Information

➡ "Checking the Network Connection Status" on page 25
➡ "When You Cannot Make Network Settings" on page 126

Checking the Network Connection Status

Checking the Network Status Using Network Icon

You can check the network connection status using the network icon on the printer's home screen. The icon changes depending on the connection type and strength of the radio wave.

Related Information

➡ "Guide to the Home Screen" on page 16

Printing a Network Connection Report

You can print a network connection report to check the status between the printer and the access point.

1. Load papers.
2. Select **Setup** on the home screen, and then press the OK button.
3. Select **Network Settings** > **Connection Check**.

   The connection check starts.
4. Press the ◇ button to print the network connection report.

   If an error has occurred, check the network connection report, and then follow the printed solutions.

Related Information

➡ "Messages and Solutions on the Network Connection Report" on page 27

Messages and Solutions on the Network Connection Report

Check the messages and error codes on the network connection report, and then follow the solutions.

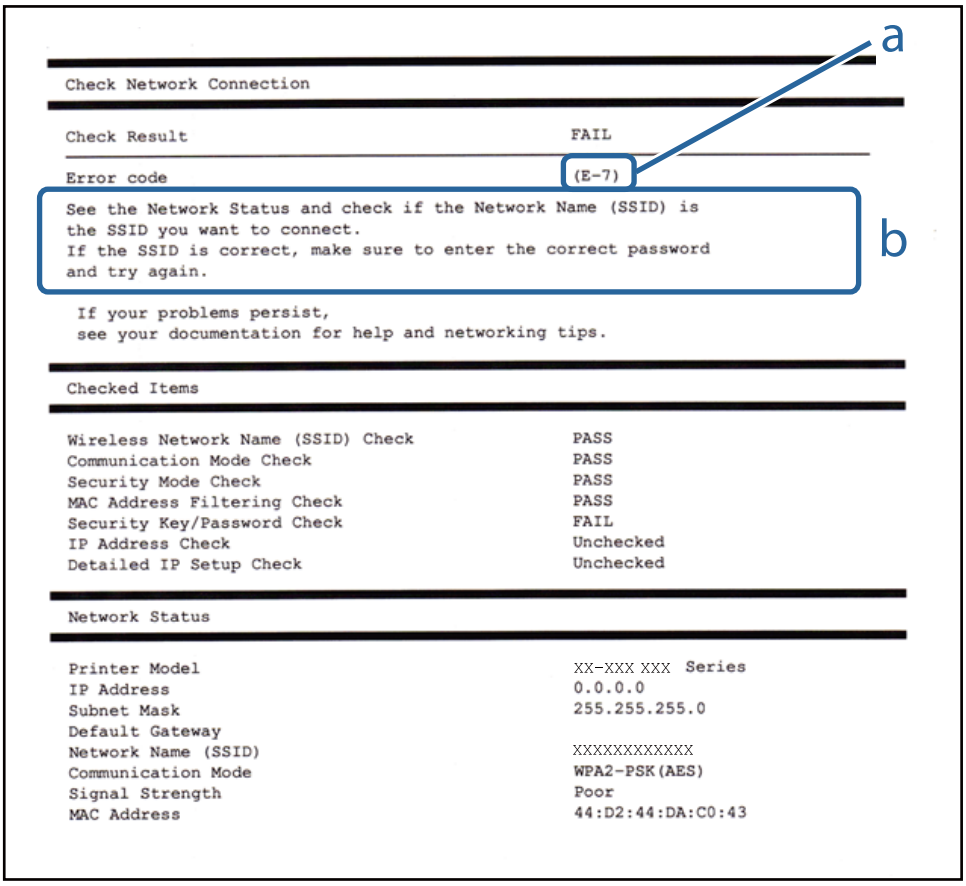

a. Error code

b. Messages on the Network Environment

a. Error code

Code	Solution
E-1	❏ Make sure that the Ethernet cable is connected to the printer, a hub, or other network devices. ❏ Make sure that the hub or other network devices are turned on.

Network Settings

Code	Solution
E-2 E-3 E-7	❏ Make sure that the access point is turned on. ❏ Check that the computer or other devices are connected correctly to the access point. ❏ Place the printer close to the access point. Remove any obstacles between them. ❏ If you have entered the SSID manually, check if it is correct. Check the SSID from the **Network Status** part on the network connection report. ❏ To establish a network using push button setup, check that the access point supports WPS. If it does not support WPS, you cannot establish a network using push button setup. ❏ Check that only ASCII characters (alphanumeric characters and symbols) are used for the SSID. The printer cannot display an SSID which contains any characters other than ASCII characters. ❏ Check the SSID and password before connecting to the access point. If you are using an access point with its default settings, the SSID and password are on the label. If you do not know the SSID and password, contact the person who set up the access point, or see the documentation provided with the access point. ❏ When you want to connect to an SSID generated using the tethering function on a smart device, check the SSID and password in the documentation provided with the smart device. ❏ If the Wi-Fi connection is suddenly disconnected, check the following. If any of these are applicable, reset the network settings using the installer. You can run it from the following website. http://epson.sn > **Setup** ❏ Another smart device was added to the network using push button setup. ❏ The Wi-Fi network was set up using any method other than push button setup.
E-5	Make sure the access point's security type is set to one of the following. If it is not, change the security type on the access point, and then reset the printer's network settings. ❏ WEP-64 bit (40 bit) ❏ WEP-128 bit (104 bit) ❏ WPA PSK (TKIP/AES)* ❏ WPA2 PSK (TKIP/AES)* ❏ WPA (TKIP/AES) ❏ WPA2 (TKIP/AES) * : WPA PSK is also known as WPA Personal. WPA2 PSK is also known as WPA2 Personal.
E-6	❏ Check if the MAC address filtering is disabled. If it is enabled, register the printer's MAC address so that it is not filtered. See the documentation provided with the access point for details. You can check the printer's MAC address from the **Network Status** part on the network connection report. ❏ If the access point's shared authentication is enabled on the WEP security method, make sure the authentication key and index are correct.
E-8	❏ Enable DHCP on the access point when the printer's Obtain IP Address is set to Auto. ❏ If the printer's Obtain IP Address is set to Manual, the IP address you manually set is out of range (for example: 0.0.0.0) and it is disabled. Set a valid IP address from printer's control panel or Web Config.
E-9	Check the following. ❏ Devices are turned on. ❏ You can access the Internet and other computers or network devices on the same network from the devices you want to connect to the printer. If it still does not work after checking the above, reset the network settings using the installer. You can run it from the following website. http://epson.sn > **Setup**

Network Settings

Code	Solution
E-10	Check the following. ❏ Other devices on the network are turned on. ❏ Network addresses (IP address, subnet mask, and default gateway) are correct if you have set the printer's Obtain IP Address to Manual. Reset the network address if these are incorrect. You can check the IP address, subnet mask, and default gateway from the **Network Status** part on the network connection report. When DHCP is enabled, change the printer's Obtain IP Address to Auto. If you want to set the IP address manually, check the printer's IP address from the **Network Status** part on the network connection report, and then select Manual on the network settings screen. Set the subnet mask to [255.255.255.0].
E-11	Check the following. ❏ The default gateway address is correct when you set the printer's TCP/IP Setup to Manual. ❏ The device that is set as the default gateway is turned on. Set the correct default gateway address. You can check the default gateway address from the **Network Status** part on the network connection report.
E-12	Check the following. ❏ Other devices on the network are turned on. ❏ The network addresses (IP address, subnet mask, and default gateway) are correct if you are entering them manually. ❏ The network addresses for other devices (subnet mask and default gateway) are the same. ❏ The IP address does not conflict with other devices. If it still does not work after checking the above, try the following. ❏ Make network settings on the computer that is on the same network as the printer using the installer. You can run it from the following website. http://epson.sn > **Setup** ❏ You can register several passwords on an access point that uses the WEP security type. If several passwords are registered, check if the first registered password is set on the printer.
E-13	Check the following. ❏ Network devices such as an access point, hub, and router are turned on. ❏ The TCP/IP Setup for network devices has not been set up manually. (If the printer's TCP/IP Setup is set automatically while the TCP/IP Setup for other network devices is performed manually, the printer's network may differ from the network for other devices.) If it still does not work after checking the above, try the following. ❏ Make network settings on the computer that is on the same network as the printer using the installer. You can run it from the following website. http://epson.sn > **Setup** ❏ You can register several passwords on an access point that uses the WEP security type. If several passwords are registered, check if the first registered password is set on the printer.

b. Messages on the Network Environment

Message	Solution
*Multiple network names (SSID) that match your entered network name (SSID) have been detected. Confirm network name (SSID).	The same SSID may be set on several access points. Check the settings on the access points, and change the SSID.
The Wi-Fi environment needs to be improved. Turn the wireless router off and then turn it on. If the connection does not improve, see the documentation for the wireless router.	After moving the printer closer to the access point and removing any obstacles between them, turn the access point on. If it still does not connect, see the documentation supplied with the access point.
*No more devices can be connected. Disconnect one of the connected devices if you want to add another one.	You can simultaneously connect up to four computers and smart devices in Wi-Fi Direct (Simple AP) connection. To add another computer or smart device, disconnect one of the connected devices first.

Related Information

➡ "Connecting to a Computer" on page 20
➡ "Web Config" on page 105
➡ "When You Cannot Make Network Settings" on page 126

Printing a Network Status Sheet

You can check the detailed network information by printing it.

1. Load papers.
2. Select **Setup** on the home screen.
3. Select **Network Settings** > **Print Status Sheet**.
4. Press the ⊡ button.

   The network status sheet is printed.

Replacing or Adding New Access Points

If the SSID changes due to the replacement of an access point, or an access point is added and a new network environment is established, re-set the Wi-Fi settings.

Related Information

➡ "Changing the Connection Method to a Computer" on page 31

Changing the Connection Method to a Computer

Using the installer and re-set up in a different connection method.

❏ Setting up from the website

Access the following website, and then enter the product name.

http://epson.sn

Go to **Setup**, and then click **Download** in the download and connect part. Click or double-click the downloaded file to run the installer. Follow the on-screen instructions.

❏ Setting up using the software disc (only for the models that come with a software disc and users with computers with disc drives.)

Insert the software disc into the computer, and then follow the on-screen instructions.

Selecting Change the Connection Methods

Follow the on-screen instructions until the following screen is displayed.

❏ Windows

Select **Change or re-set the connection method** on the Select Software Installation screen, and then click **Next**.

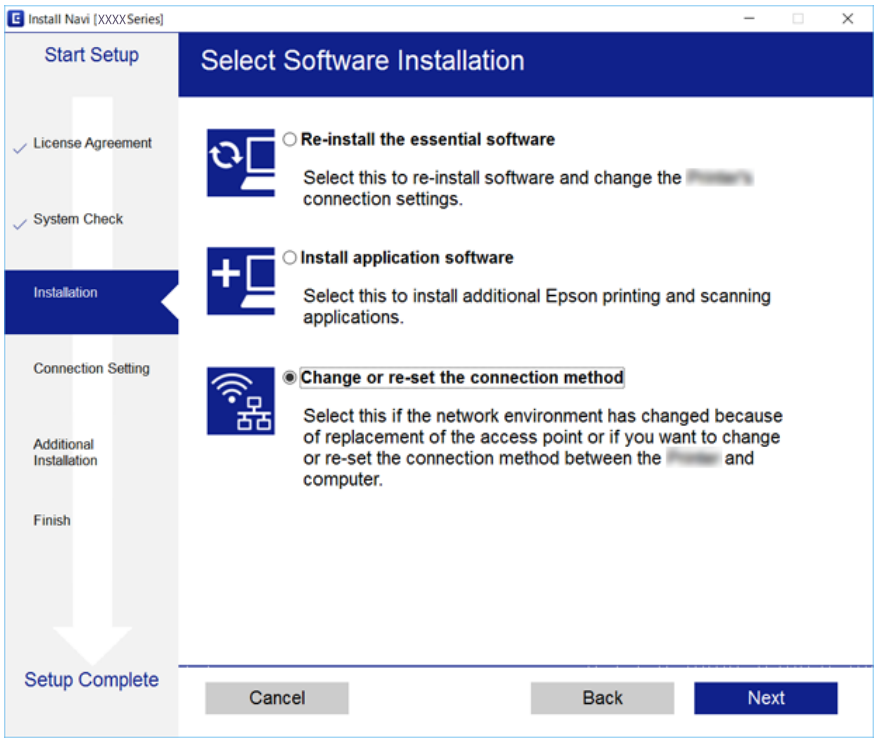

❏ Mac OS X

Select how you want to connect the printer to your computer.

Disabling Wi-Fi from the Control Panel

When Wi-Fi is disabled, the Wi-Fi connection is disconnected.

1. Select **Setup** on the home screen.
2. Select **Network Settings**.
3. Select **Wi-Fi Setup**.
4. Select **Disable Wi-Fi**.
5. Check the message, and then select **Yes**.

Disconnecting Wi-Fi Direct (Simple AP) connection from the Control Panel

Note:
When Wi-Fi Direct (Simple AP) connection disabled, all computers and smart devices connected to the printer in Wi-Fi Direct (Simple AP) connection are disconnected. If you want to disconnect a specific device, disconnect from the device instead of the printer.

1. Select **Setup** on the home screen.
2. Select **Network Settings**.
3. Select **Wi-Fi Setup**.

4. Select **Wi-Fi Direct Setup**.
5. Select **Disable Wi-Fi Direct**.
6. Check the message, and then select **Yes**.

Restoring the Network Settings from the Control Panel

You can restore all network settings to their defaults.

1. Select **Setup** on the home screen.
2. Select **Restore Default Settings** > **Network Settings**.
3. Check the message, and then select **Yes**.

Loading Paper

Paper Handling Precautions

❏ Read the instruction sheets supplied with the paper.

❏ Fan and align the edges of the paper before loading. Do not fan or curl photo paper. Doing so may damage the printable side.

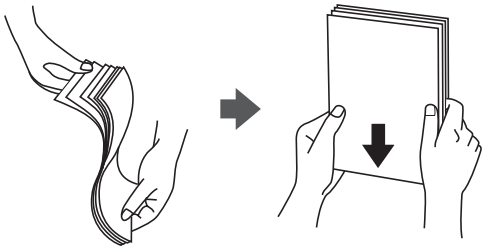

❏ If the paper is curled, flatten it or curl it slightly in the opposite direction before loading. Printing on curled paper may cause paper jams and smears on the printout.

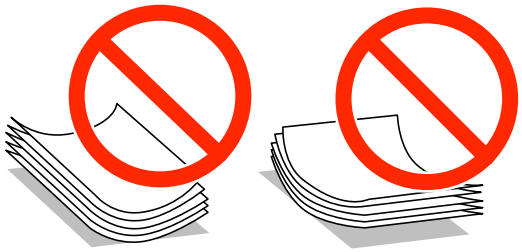

❏ Do not use paper that is wavy, torn, cut, folded, damp, too thick, too thin, or paper that has stickers stuck to it. Using these types of paper causes paper jams and smears on the printout.

❏ Fan and align the edges of the envelopes before loading. When the stacked envelopes are puffed up with air, press them down to flatten them before loading.

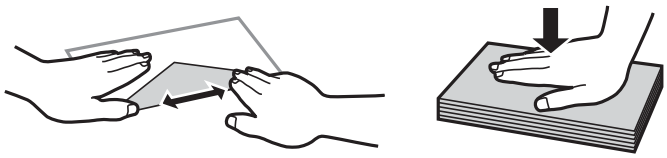

❏ Do not use envelopes that are curled or folded. Using these envelopes causes paper jams and smears on the printout.

❏ Do not use envelopes with adhesive surfaces on the flaps or window envelopes.

❏ Avoid using envelopes that are too thin, as they may curl during printing.

Related Information

➡ "Printer Specifications" on page 145

Available Paper and Capacities

Epson recommends using genuine Epson paper to ensure high-quality printouts.

Genuine Epson Paper

Media Name	Size	Loading Capacity (Sheets)	Manual 2-Sided Printing	Borderless Printing
Epson Bright White Ink Jet Paper	A4	80*	✓	–
Epson Ultra Glossy Photo Paper	A4, 13×18 cm (5×7 in.), 10×15 cm (4×6 in.)	20	–	✓
Epson Premium Glossy Photo Paper	A4, 13×18 cm (5×7 in.), 16:9 wide size (102×181 mm), 10×15 cm (4×6 in.)	20	–	✓
Epson Premium Semigloss Photo Paper	A4, 10×15 cm (4×6 in.)	20	–	✓
Epson Photo Paper Glossy	A4, 13×18 cm (5×7 in.), 10×15 cm (4×6 in.)	20	–	✓
Epson Matte Paper-Heavyweight	A4	20	–	✓
Epson Photo Quality Ink Jet Paper	A4	80	–	–

* For manual 2-sided printing, you can load up to 30 sheets for paper with one side already printed.

Note:
The availability of paper varies by location. For the latest information on paper available in your area, contact Epson support.

Commercially Available Paper

Media Name	Size	Loading Capacity (Sheets)	Manual 2-Sided Printing	Borderless Printing
Plain paper*1	Letter*2, A4, B5*2, A5*2, A6*2	Up to the line indicated by the triangle symbol on the edge guide.*3	✓	–
	Legal*2	1		
	User Defined*2			
Envelope*2	Envelope #10, Envelope DL, Envelope C6	10	–	–

*1 The loading capacity for pre-punched paper is one sheet.

*2 Only printing from computer is available.

*3 For manual 2-sided printing, you can load up to 30 sheets for paper with one side already printed.

Related Information

➡ "Technical Support Web Site" on page 155

List of Paper Types

To obtain optimum printing results, select the paper type that suits the paper.

Media Name	Media Type	
	Control Panel	Printer Driver, Smart device*2
Epson Bright White Ink Jet Paper*1	plain papers	plain papers
Epson Ultra Glossy Photo Paper*1	Ultra Glossy	Epson Ultra Glossy
Epson Premium Glossy Photo Paper*1	Prem. Glossy	Epson Premium Glossy
Epson Premium Semigloss Photo Paper*1	Prem. Semigloss	Epson Premium Semigloss
Epson Photo Paper Glossy*1	Glossy	Photo Paper Glossy
Epson Matte Paper-Heavyweight*1	Matte	Epson Matte
Epson Photo Quality Ink Jet Paper*1	Matte	Epson Matte
Plain paper*1	plain papers	plain papers
Envelope	Envelope	Envelope

*1 These paper types are compatible with Exif Print and PRINT Image Matching when printed by the printer driver. For more information, see the documentation that came with the Exif Print or PRINT Image Matching compatible digital camera.

*2 For smart devices, these media types can be selected when printing using Epson iPrint.

Loading Paper in the Rear Paper Feed

1. Open the feeder guard, extend the paper support, and then tilt it backwards.

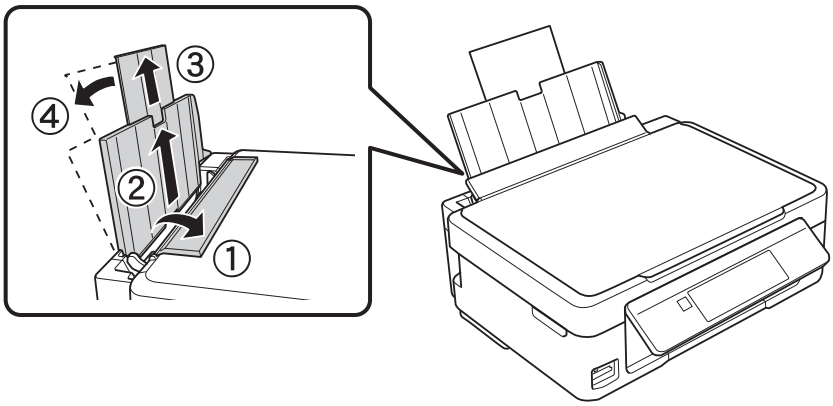

2. Slide the edge guide to the left.

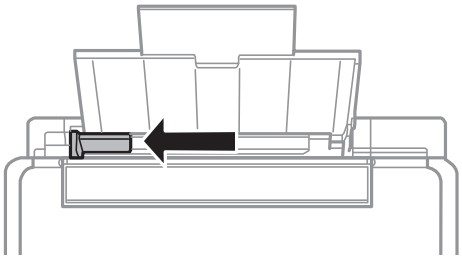

3. Load paper vertically along the right side of the rear paper feed with the printable side facing up.

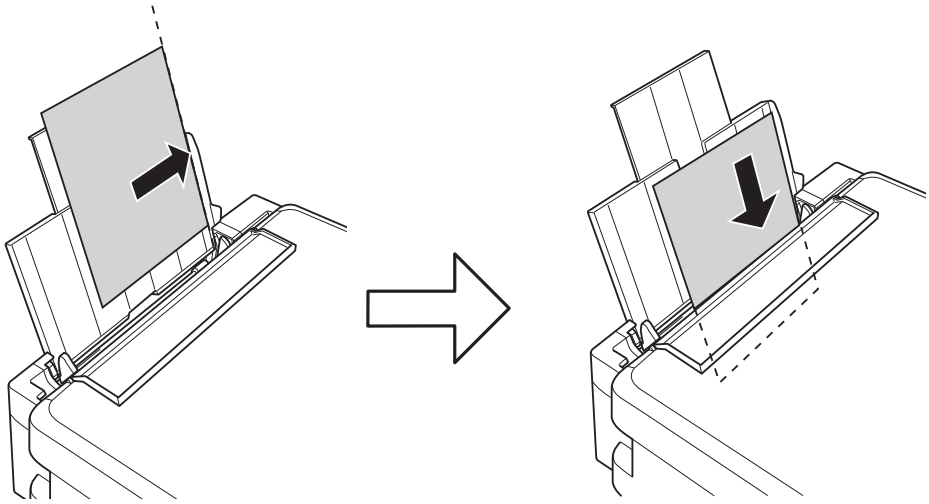

> **Important:**
> *Do not load more than the maximum number of sheets specified for the paper. For plain paper, do not load above the line indicated by the triangle symbol on the edge guide.*

❏ Envelopes

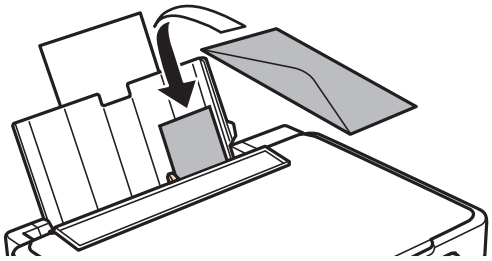

❏ Pre-punched paper

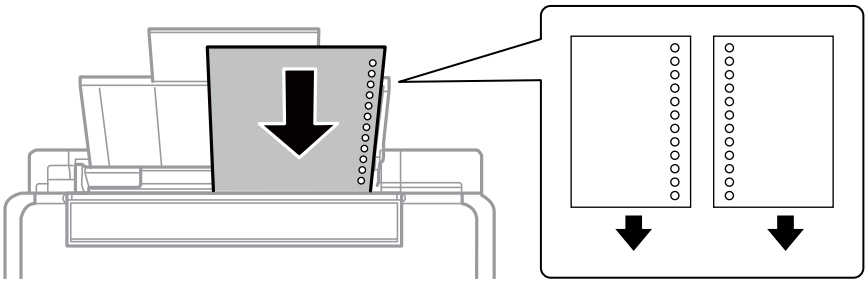

Note:

❏ *Load a single sheet of paper without binding holes at the top or the bottom.*

❏ *Adjust the print position of your file to avoid printing over the holes.*

4. Slide the edge guide to the edge of the paper, and then close the feeder guard.

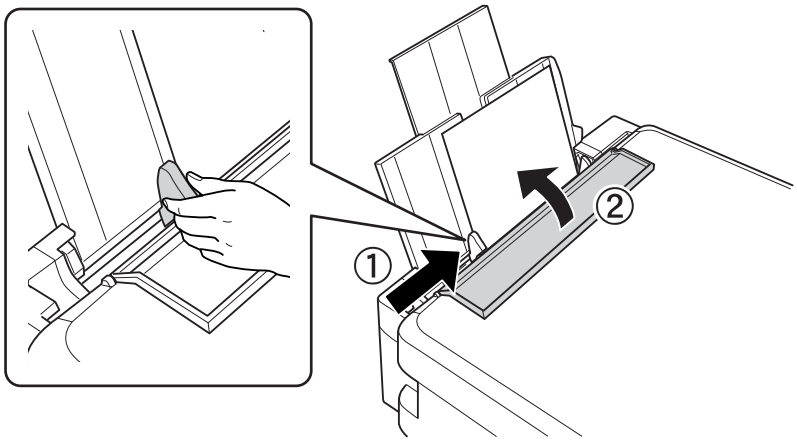

5. Check the paper size and paper type settings displayed on the control panel. To use the settings, select **Confirm** using the ▲ or ▼ button, press the OK button, and then go to step 7. To change the settings, select **Change** using the ▲ or ▼ button, press the OK button, and then go to the next step.

> ***Important:***
> *The paper setting screen is not displayed if the paper is not loaded along the right side of the rear paper feed. An error occurs when you start printing.*

Note:
❏ *A message is displayed if the registered paper size and paper type settings differ from the print settings.*

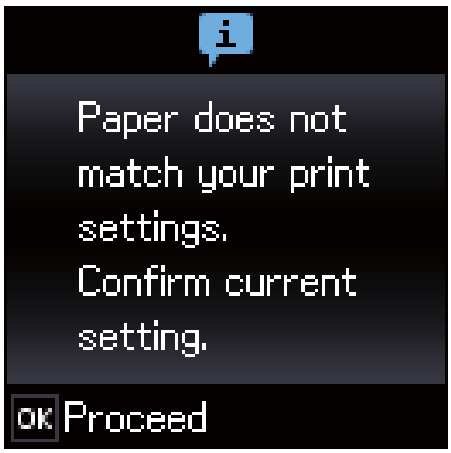

❏ *The paper setting screen is not displayed if you have disabled* ***Paper Configuration*** *in the following menus. In this situation, you cannot print using AirPrint.*

Setup > ***Printer Setup*** > ***Paper Source Settings*** > ***Paper Configuration***

6. On the paper size setting screen, select the paper size using the ◀ or ▶ button, and then press the OK button. On the paper type setting screen, select the paper type in the same way, and then press the OK button. Confirm the settings, and then press the OK button.

   Note:
   You can also display the paper size and paper type settings screen by selecting the following menus.

   Setup > ***Printer Setup*** > ***Paper Source Settings*** > ***Paper Setup***

7. Slide out the output tray and then raise the stopper.

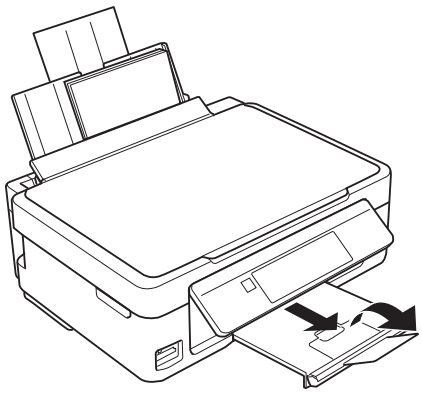

Note:
Return the remaining paper to its package. If you leave it in the printer, the paper may curl or the print quality may decline.

Related Information

➡ "Paper Handling Precautions" on page 34
➡ "Available Paper and Capacities" on page 35

Placing Originals

Placing Originals on the Scanner Glass

> ***Important:***
> *When placing bulky originals such as books, prevent exterior light from shining directly onto the scanner glass.*

1. Open the document cover.

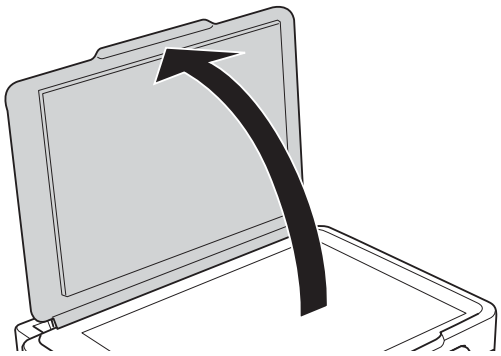

2. Remove any dust or stains on the scanner glass.

3. Place the original face-down and slide it to the corner mark.

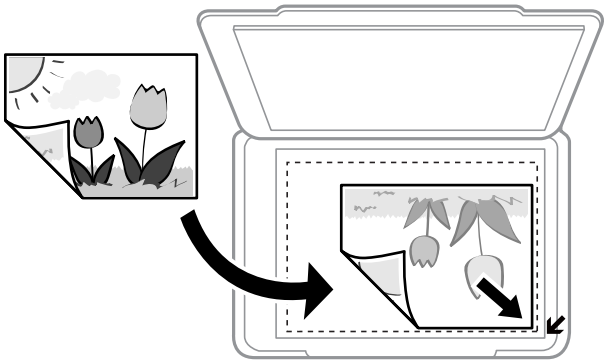

Note:
A range of 1.5 mm from the edges of the scanner glass is not scanned.

4. Close the cover gently.

5. Remove the originals after scanning.

Note:
If you leave the originals on the scanner glass for a long time, they may stick to the surface of the glass.

How to Place Various Originals

Placing Originals for 2-Up Layout

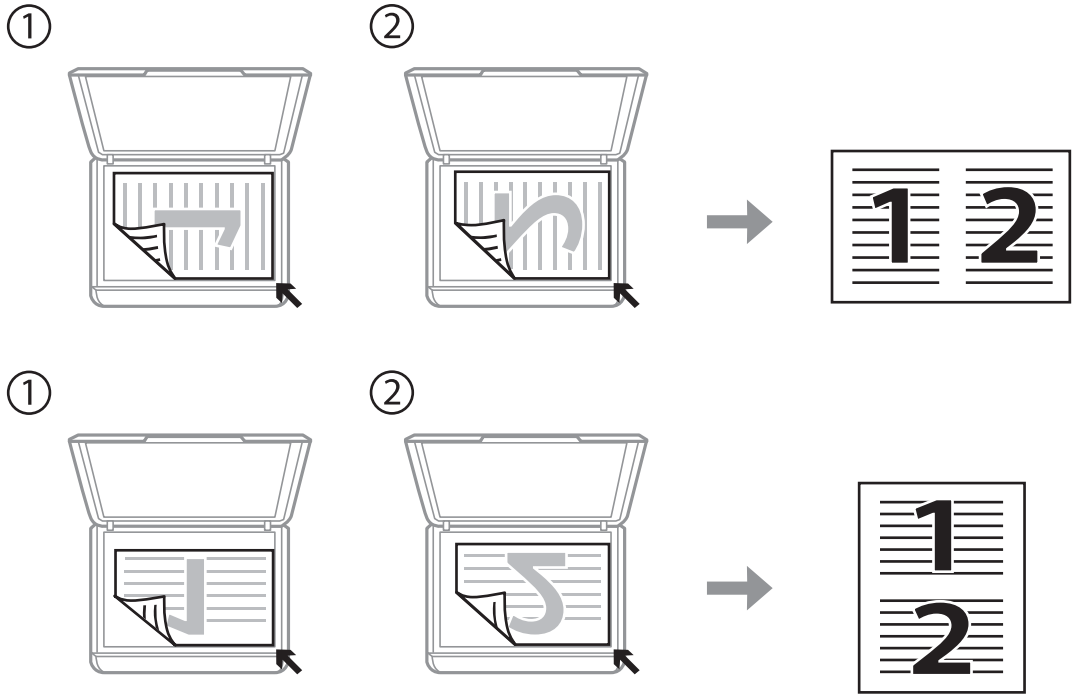

Placing a Double-Page Spread for 2-Up Layout

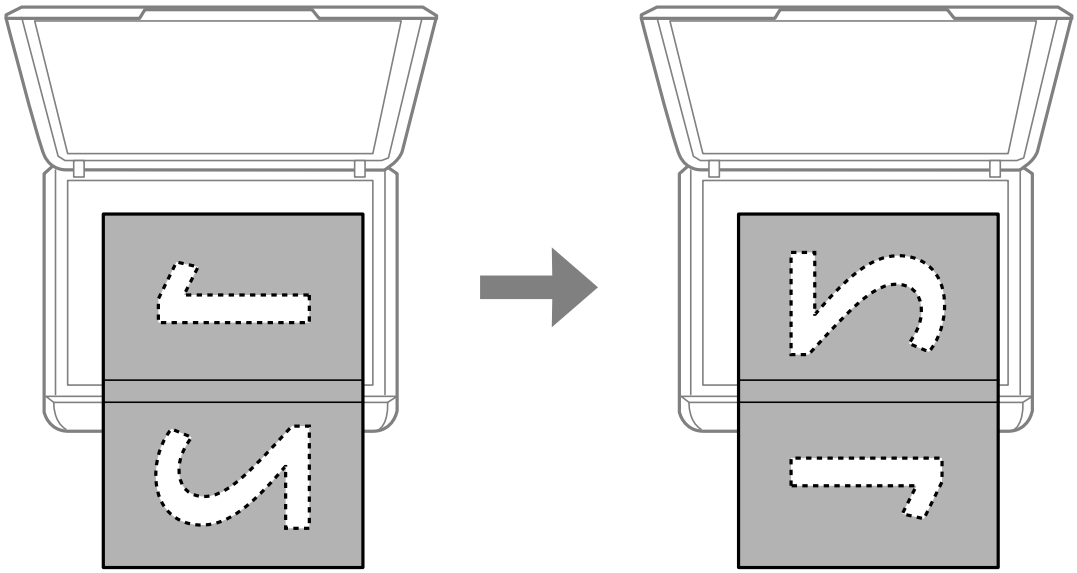

Placing Multiple Photos for Scanning

You can scan multiple photos at once in **Photo Mode** in Epson Scan 2 when you select **Thumbnail** from the list at the top of the preview window.

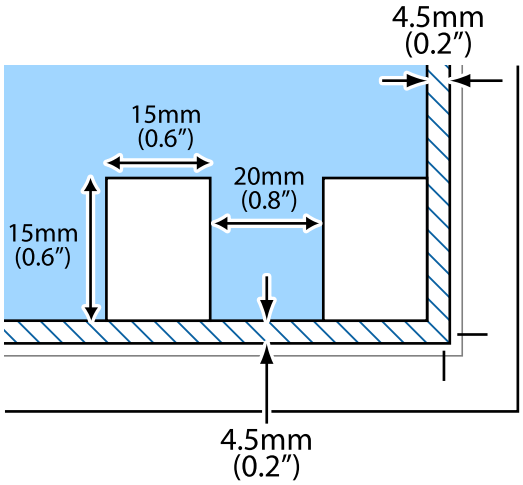

Inserting a Memory Card

Supported Memory Cards

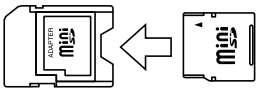	miniSD* miniSDHC* microSD* microSDHC* microSDXC*
	SD SDHC SDXC

* Attach an adapter to fit the memory card slot. Otherwise, the card may get stuck.

Related Information

➡ "Supported Memory Card Specifications" on page 149

Inserting and Removing a Memory Card

1. Insert a memory card into the printer.

   The printer starts reading the data and the light flashes. When reading is complete, the light stops flashing and remains on.

   > **Important:**
   > ❏ *Insert a memory card straight into the printer.*
   > ❏ *The card should not be fully inserted. Do not try to force it all the way into the slot.*

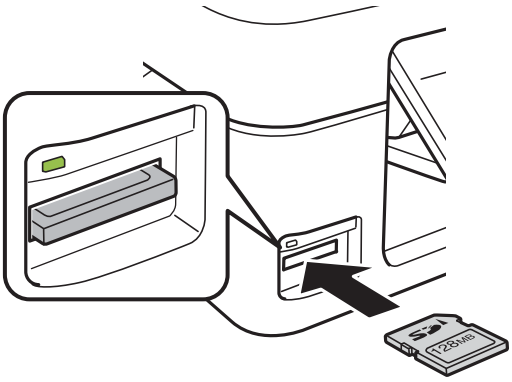

2. When you have finished using the memory card, make sure the light is not flashing, and then remove the card.

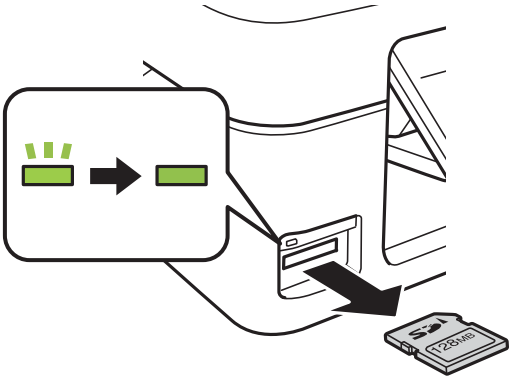

> **Important:**
> *If you remove the memory card while the light is flashing, the data in the memory card may be lost.*

Note:
If you access the memory card from a computer, you need to operate the computer to safely remove the removable device.

Related Information

➡ "Accessing a Memory Card From a Computer" on page 154

Printing

Printing from the Control Panel

Printing Photos by Selecting from a Memory Card

1. Load paper in the printer.

   > **Important:**
   > *Make the paper settings on the control panel.*

2. Insert a memory card into the printer.

   > **Important:**
   > *Do not remove the memory card until you have finished printing.*

3. Enter **Print Photos** from the home screen using the ◀ or ▶ button, and then press the OK button.

4. Use the ◀ or ▶ button to select a photo, and use the ▲ or ▼ button to set the number of copies. When printing more than one photo, repeat this procedure.

5. Press the OK button to display the print settings confirmation screen.

6. To change the print settings, press the ▼ button to display the setting screen. Use the ▲ or ▼ button to select setting items such as the paper size and the paper type, and change the settings using the ◀ or ▶ button. When you have finished, press the OK button.

7. Press the ⊡ button.

Related Information

➡ "Loading Paper in the Rear Paper Feed" on page 36
➡ "List of Paper Types" on page 36
➡ "Inserting a Memory Card" on page 43
➡ "Menu Options for Print Photos Mode" on page 47

Printing Lined Paper, Calendars, and Original Writing Paper

You can easily print lined paper, calendars, and original writing paper using the **Personal Stationery** menu.

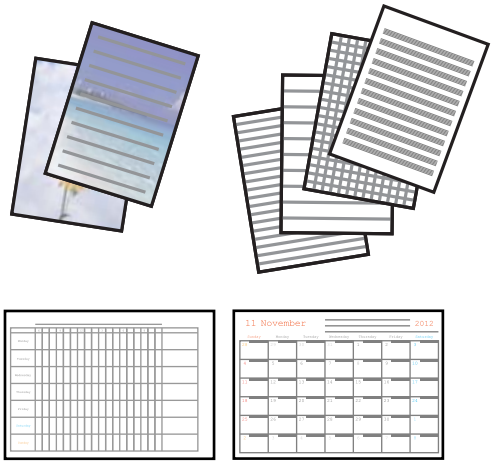

1. Load paper in the printer.

> **Important:**
> *Make the paper settings on the control panel.*

2. To print writing paper using a photo on your memory card, insert the memory card into the printer.

3. Enter **Personal Stationery** from the home screen using the ◀ or ▶ button, and then press the OK button.

4. Select a menu item using the ◀ or ▶ button, and then press the OK button.

5. Follow the on-screen instructions to print.

Related Information

➡ "Loading Paper in the Rear Paper Feed" on page 36
➡ "List of Paper Types" on page 36
➡ "Inserting a Memory Card" on page 43
➡ "Menu Options for Printing Lined Paper, Calendars, and Original Writing Paper" on page 46
➡ "Menu Options for Print Photos Mode" on page 47

Menu Options for Printing Lined Paper, Calendars, and Original Writing Paper

Lined Papers

Prints some types of lined paper, graph paper, or music paper on A4 size paper.

Writing Papers

Prints some types of writing paper on A4 size paper with a photo from the memory card set as the background. The photo is printed lightly so that it can be easily written on.

Calendar

Prints a weekly or monthly calender. Select the year and the month for the monthly calendar.

DPOF Printing

This printer is compatible with DPOF (Digital Print Order Format) Ver. 1.10. DPOF is a format that stores additional information for photos such as the date, time, user name, and printing information. DPOF-compatible cameras allow you to set which image on a memory card to print and the number of copies. When the memory card is inserted into the printer, the photos selected by the camera are printed.

Note:
For information on making print settings on your camera, see the documentation provided with your camera.

When you insert a memory card into the printer, a confirmation screen is displayed. Press the OK button to display the print start screen. Press the ⊡ button to start printing. If you want to change the print settings, press the ▼ button. Setting items are the same as in **Print Photos** mode.

Related Information

➡ "Printing Photos by Selecting from a Memory Card" on page 45
➡ "Menu Options for Print Photos Mode" on page 47

Menu Options for Print Photos Mode

Paper Size

Select the paper size you loaded.

Paper Type

Select the paper type you loaded.

Borderless

To print without margins around the edges, select **Borderless**. The image is enlarged a little to remove margins from the edges of the paper. To print with margins around the edges, select **With Border**.

Quality

Select the print quality. Selecting **Best** provides higher quality printing, but the printing speed may be slower.

Printing from a Computer

Printing Basics - Windows

Note:
❏ *See the online help for explanations of the setting items. Right-click an item, and then click **Help**.*

❏ *Operations differ depending on the application. See the application's help for details.*

Printing

1. Load paper in the printer.

> ***Important:***
> *Make the paper settings on the control panel.*

2. Open the file you want to print.
3. Select **Print** or **Print Setup** from the **File** menu.
4. Select your printer.
5. Select **Preferences** or **Properties** to access the printer driver window.

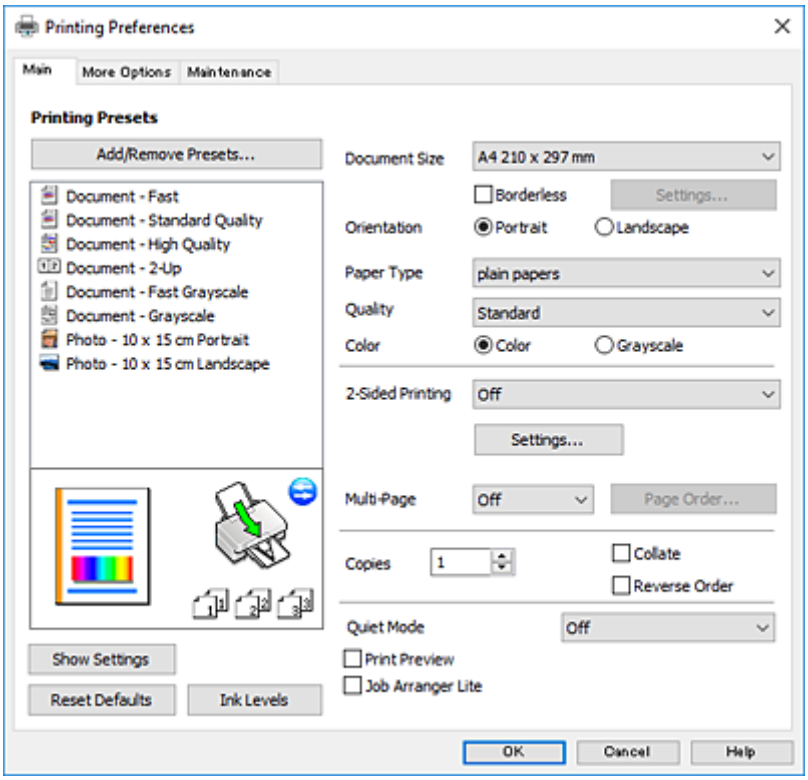

6. Make the following settings.
   - ❏ Document Size: Select the paper size you loaded in the printer.
   - ❏ Borderless: Select to print with no margins around the image.

     In borderless printing, the print data is enlarged slightly more than the paper size so that no margins are printed around the edges of the paper. Click **Settings** to select the amount of enlargement.
   - ❏ Orientation: Select the orientation you set in the application.
   - ❏ Paper Type: Select the type of paper you loaded.
   - ❏ Quality: Select the print quality.

     Selecting **High** provides higher quality printing, but the printing speed may be slower.
   - ❏ Color: Select **Grayscale** when you want to print in black or shades of gray.

   Note:
   *When printing on envelopes, select **Landscape** as the **Orientation** setting.*

7. Click **OK** to close the printer driver window.

8. Click **Print**.

Related Information

➡ "Available Paper and Capacities" on page 35
➡ "Loading Paper in the Rear Paper Feed" on page 36
➡ "Guide to Windows Printer Driver" on page 108
➡ "List of Paper Types" on page 36

Printing Basics - Mac OS X

Note:
Explanations in the section use TextEdit as an example. Operations and screens differ depending on the application. See the application's help for details.

1. Load paper in the printer.

> ***Important:***
> *Make the paper settings on the control panel.*

2. Open the file you want to print.

3. Select **Print** from the **File** menu or another command to access the print dialog.

   If necessary, click **Show Details** or ▼ to expand the print window.

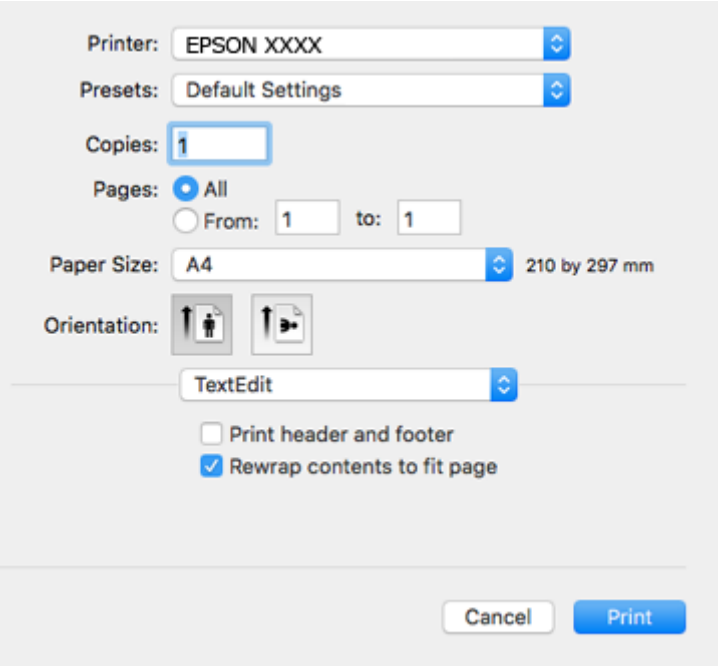

4. Make the following settings.

   ❏ Printer: Select your printer.

- ❏ Presets: Select when you want to use the registered settings.
- ❏ Paper Size: Select the paper size you loaded in the printer.
  When printing with no margins, select a "borderless" paper size.
- ❏ Orientation: Select the orientation you set in the application.

Note:
- ❏ *If the above setting menus are not displayed, close the print window, select **Page Setup** from the **File** menu, and then make settings.*
- ❏ *When printing on envelopes, select landscape orientation.*

5. Select **Print Settings** from the pop-up menu.

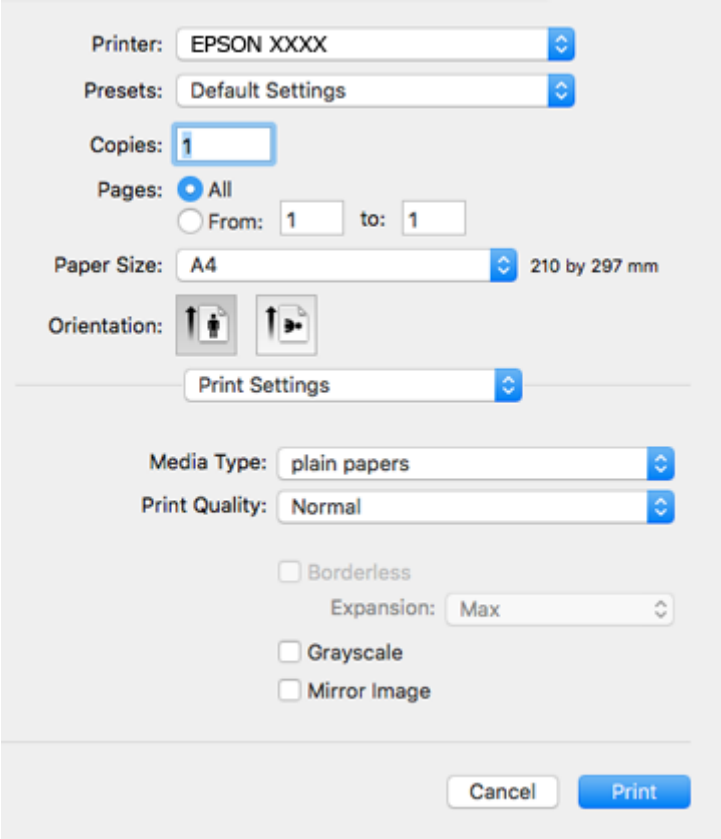

Note:
*On Mac OS X v10.8.x or later, if the **Print Settings** menu is not displayed, the Epson printer driver has not been installed correctly.*

*Select **System Preferences** from the menu > **Printers & Scanners** (or **Print & Scan**, **Print & Fax**), remove the printer, and then add the printer again. See the following to add a printer.*

http://epson.sn

6. Make the following settings.
   - ❏ Media Type: Select the type of paper you loaded.
   - ❏ Print Quality: Select the print quality.
     Selecting **Fine** provides higher quality printing, but the printing speed may be slower.

- ❏ Expansion: Available when selecting a borderless paper size.

  In borderless printing, the print data is enlarged slightly more than the paper size so that no margins are printed around the edges of the paper. Select the amount of enlargement.

- ❏ Grayscale: Select to print in black or shades of gray.

7. Click **Print**.

Related Information

➡ "Available Paper and Capacities" on page 35
➡ "Loading Paper in the Rear Paper Feed" on page 36
➡ "Guide to Mac OS X Printer Driver" on page 111
➡ "List of Paper Types" on page 36

Printing on 2-Sides (for Windows only)

The printer driver prints automatically separating even pages and odd pages. When the printer has finished printing the odd pages, flip the paper over following the instructions to print the even pages. You can also print a booklet that can be created by folding the printout.

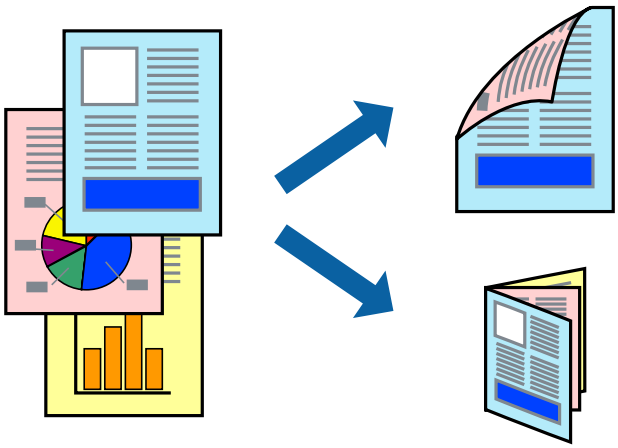

Note:

- ❏ *This feature is not available for borderless printing.*
- ❏ *If you do not use paper that is suitable for 2-sided printing, the print quality may decline and paper jams may occur.*
- ❏ *Depending on the paper and the data, ink may bleed through to the other side of the paper.*
- ❏ *If **EPSON Status Monitor 3** is disabled, access the printer driver, click **Extended Settings** on the **Maintenance** tab, and then select **Enable EPSON Status Monitor 3**.*
- ❏ *2-sided printing may not be available when the printer is accessed over a network or is used as a shared printer.*

1. Load paper in the printer.
2. Open the file you want to print.
3. Access the printer driver window.
4. Select **Manual (Long-edge binding)** or **Manual (Short-edge binding)** from **2-Sided Printing** on the **Main** tab.

5. Click **Settings**, make the appropriate settings, and then click **OK**.

   Note:
   *To print as a booklet, select **Booklet**.*

6. Set the other items on the **Main** and **More Options** tabs as necessary, and then click **OK**.

7. Click **Print**.

   When the first side has finished printing, a pop-up window is displayed on the computer. Follow the on-screen instructions.

Related Information

➡ "Available Paper and Capacities" on page 35
➡ "Loading Paper in the Rear Paper Feed" on page 36
➡ "Printing Basics - Windows" on page 47

Printing Several Pages on One Sheet

You can print two or four pages of data on a single sheet of paper.

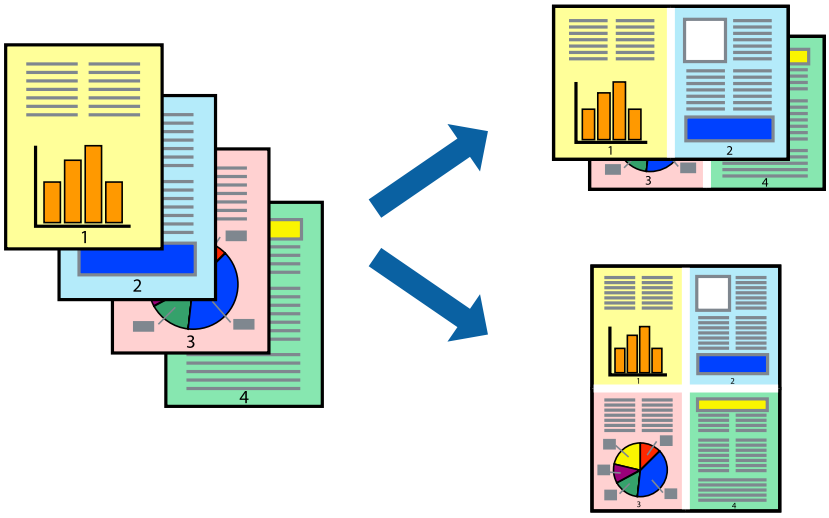

Printing Several Pages on One Sheet - Windows

Note:
This feature is not available for borderless printing.

1. Load paper in the printer.

2. Open the file you want to print.

3. Access the printer driver window.

4. Select **2-Up** or **4-Up** as the **Multi-Page** setting on the **Main** tab.

5. Click **Page Order**, make the appropriate settings, and then click **OK** to close the window.

6. Set the other items on the **Main** and **More Options** tabs as necessary, and then click **OK**.
7. Click **Print**.

Related Information

➡ "Loading Paper in the Rear Paper Feed" on page 36
➡ "Printing Basics - Windows" on page 47

Printing Several Pages on One Sheet - Mac OS X

1. Load paper in the printer.
2. Open the file you want to print.
3. Access the print dialog.
4. Select **Layout** from the pop-up menu.
5. Set the number of pages in **Pages per Sheet**, the **Layout Direction** (page order), and **Border**.
6. Set the other items as necessary.
7. Click **Print**.

Related Information

➡ "Loading Paper in the Rear Paper Feed" on page 36
➡ "Printing Basics - Mac OS X" on page 49

Printing to Fit the Paper Size

You can print to fit the paper size you loaded in the printer.

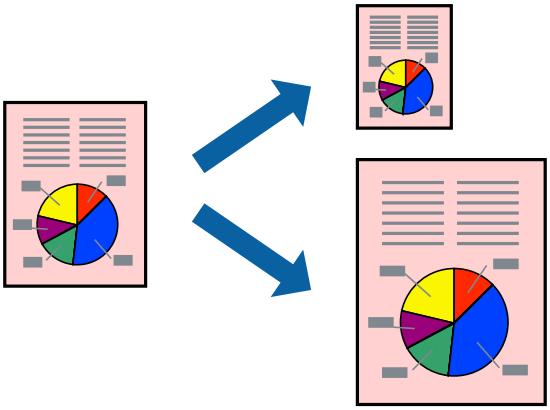

Printing to Fit the Paper Size - Windows

Note:
This feature is not available for borderless printing.

1. Load paper in the printer.
2. Open the file you want to print.
3. Access the printer driver window.
4. Make the following settings on the **More Options** tab.
   - ❏ Document Size: Select the paper size you set in the application.
   - ❏ Output Paper: Select the paper size you loaded in the printer.
     Fit to Page is selected automatically.

   Note:
   *If you want to print a reduced image at the center of the page, select **Center**.*
5. Set the other items on the **Main** and **More Options** tabs as necessary, and then click **OK**.
6. Click **Print**.

Related Information

➡ "Loading Paper in the Rear Paper Feed" on page 36
➡ "Printing Basics - Windows" on page 47

Printing to Fit the Paper Size - Mac OS X

1. Load paper in the printer.
2. Open the file you want to print.
3. Access the print dialog.
4. Select the size of the paper you set in the application as the **Paper Size** setting.
5. Select **Paper Handling** from the pop-up menu.
6. Select **Scale to fit paper size**.
7. Select the paper size you loaded in the printer as the **Destination Paper Size** setting.
8. Set the other items as necessary.
9. Click **Print**.

Related Information

➡ "Loading Paper in the Rear Paper Feed" on page 36
➡ "Printing Basics - Mac OS X" on page 49

Printing Multiple Files Together (for Windows Only)

Job Arranger Lite allows you to combine several files created by different applications and print them as a single print job. You can specify the print settings for combined files, such as layout, print order, and orientation.

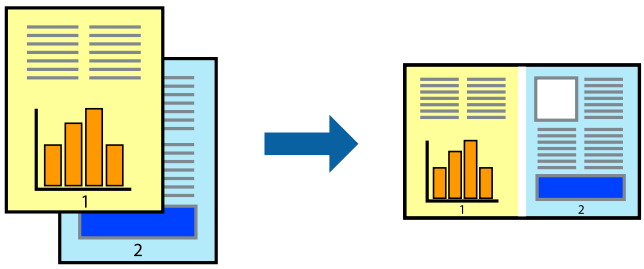

1. Load paper in the printer.
2. Open the file you want to print.
3. Access the printer driver window.
4. Select **Job Arranger Lite** on the **Main** tab.
5. Click **OK** to close the printer driver window.
6. Click **Print**.

   The **Job Arranger Lite** window is displayed and the print job is added to the **Print Project**.
7. With the **Job Arranger Lite** window opened, open the file that you want to combine with the current file, and then repeat steps 3 to 6.

   Note:
   - ❏ *If you close the **Job Arranger Lite** window, the unsaved **Print Project** is deleted. To print later, select **Save** from the **File** menu.*
   - ❏ *To open a **Print Project** saved in **Job Arranger Lite**, click **Job Arranger Lite** on the printer driver's **Maintenance** tab. Next, select **Open** from the **File** menu to select the file. The extension of the saved files is "ecl".*
8. Select the **Layout** and **Edit** menus in **Job Arranger Lite** to edit the **Print Project** as necessary. See the help of Job Arranger Lite for details.
9. Select **Print** from the **File** menu.

Related Information

➡ "Loading Paper in the Rear Paper Feed" on page 36

➡ "Printing Basics - Windows" on page 47

Printing One Image on Multiple Sheets to Create a Poster (for Windows Only)

This feature allows you to print one image on multiple sheets of paper. You can create a larger poster by taping them together.

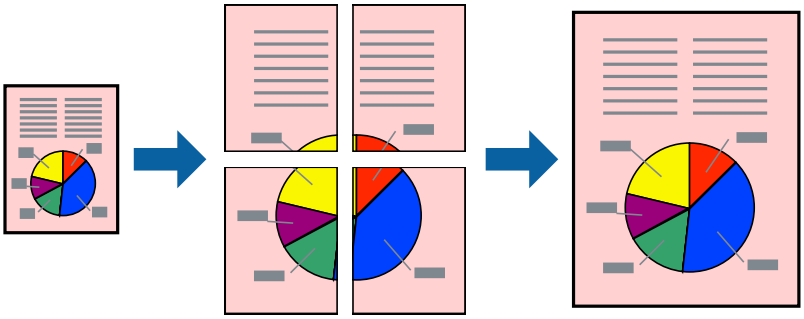

Note:
This feature is not available for borderless printing.

1. Load paper in the printer.
2. Open the file you want to print.
3. Access the printer driver window.
4. Select **2x1 Poster**, **2x2 Poster**, **3x3 Poster**, or **4x4 Poster** from **Multi-Page** on the **Main** tab.
5. Click **Settings**, make the appropriate settings, and then click **OK**.

   Note:
   Print Cutting Guides *allows you to print a cutting guide.*

6. Set the other items on the **Main** and **More Options** tabs as necessary, and then click **OK**.
7. Click **Print**.

Related Information

➡ "Loading Paper in the Rear Paper Feed" on page 36
➡ "Printing Basics - Windows" on page 47

Making Posters Using Overlapping Alignment Marks

Here is an example of how to make a poster when **2x2 Poster** is selected, and **Overlapping Alignment Marks** is selected in **Print Cutting Guides**.

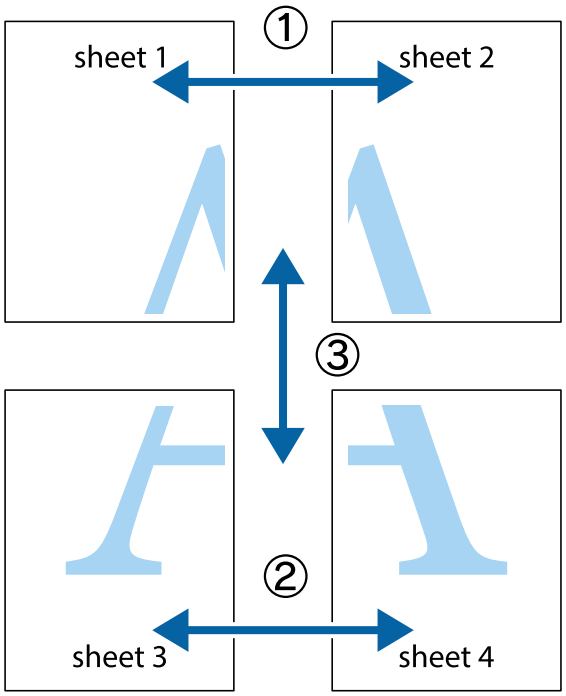

1. Prepare Sheet 1 and Sheet 2. Cut off the margins of Sheet 1 along the vertical blue line through the center of the top and bottom cross marks.

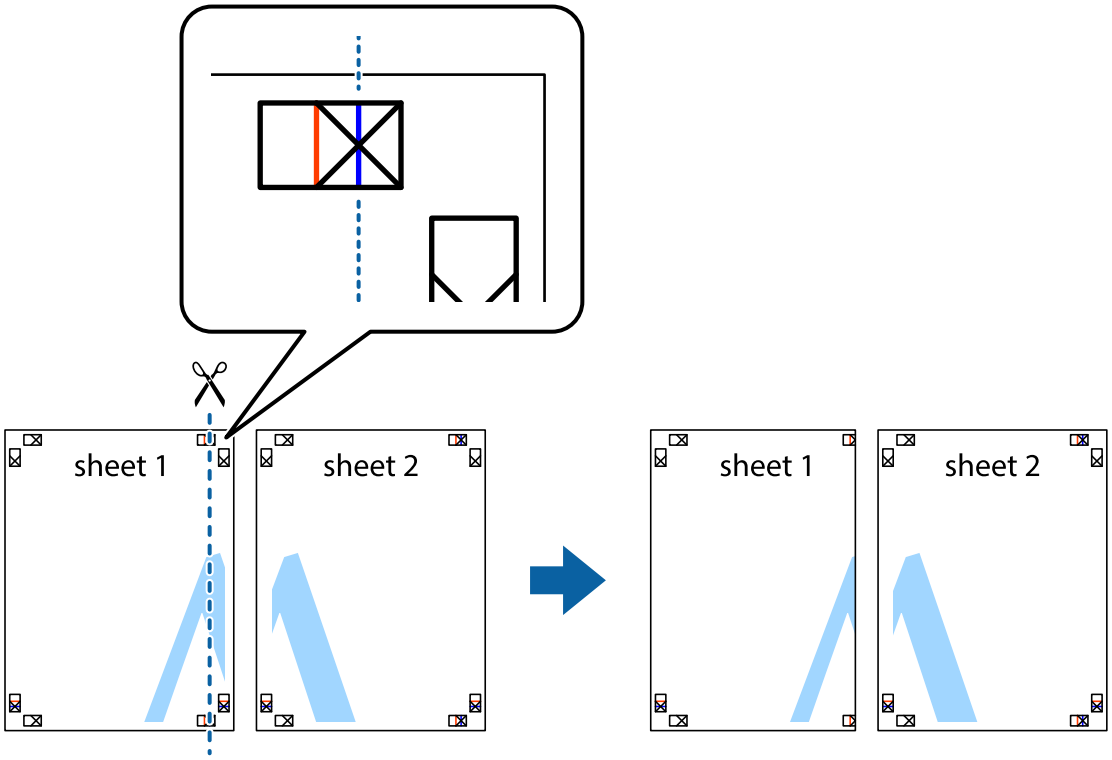

2. Place the edge of Sheet 1 on top of Sheet 2 and align the cross marks, then temporarily tape the two sheets together from the back.

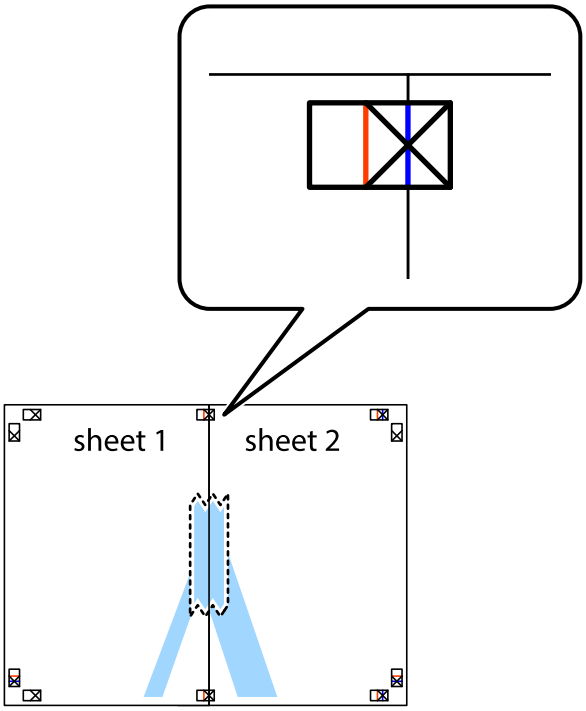

3. Cut the taped sheets in two along the vertical red line through the alignment markers (this time, the line to the left of the cross marks).

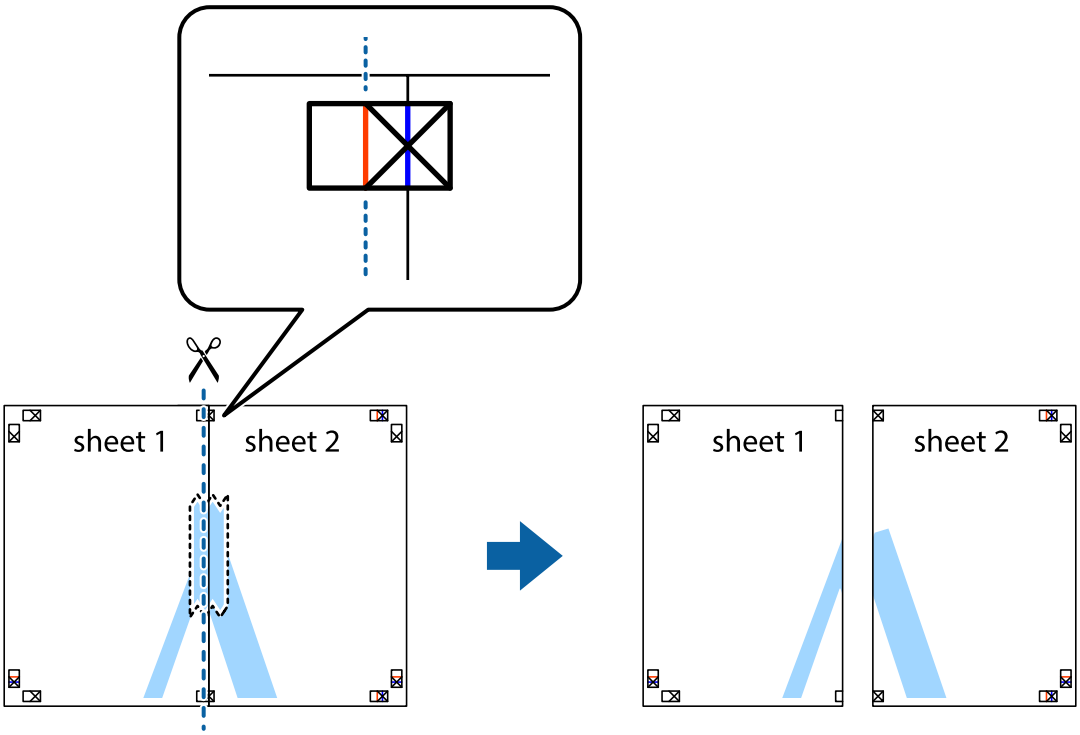

4. Tape the sheets together from the back.

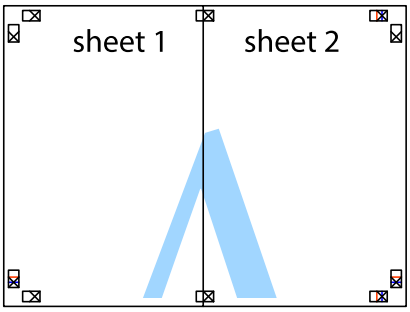

5. Repeat steps 1 to 4 to tape Sheet 3 and Sheet 4 together.

6. Cut off the margins of Sheet 1 and Sheet 2 along the horizontal blue line through the center of the left and right side cross marks.

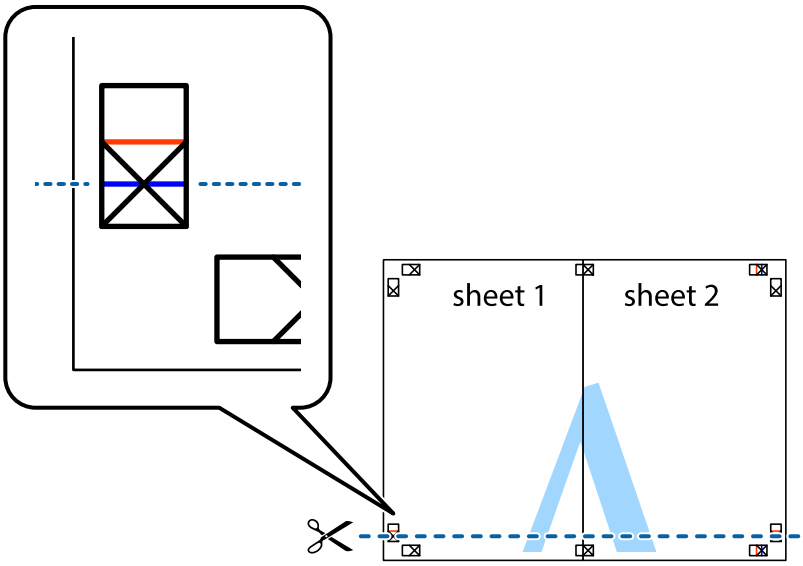

7. Place the edge of Sheet 1 and Sheet 2 on top of Sheet 3 and Sheet 4 and align the cross marks, and then temporarily tape them together from the back.

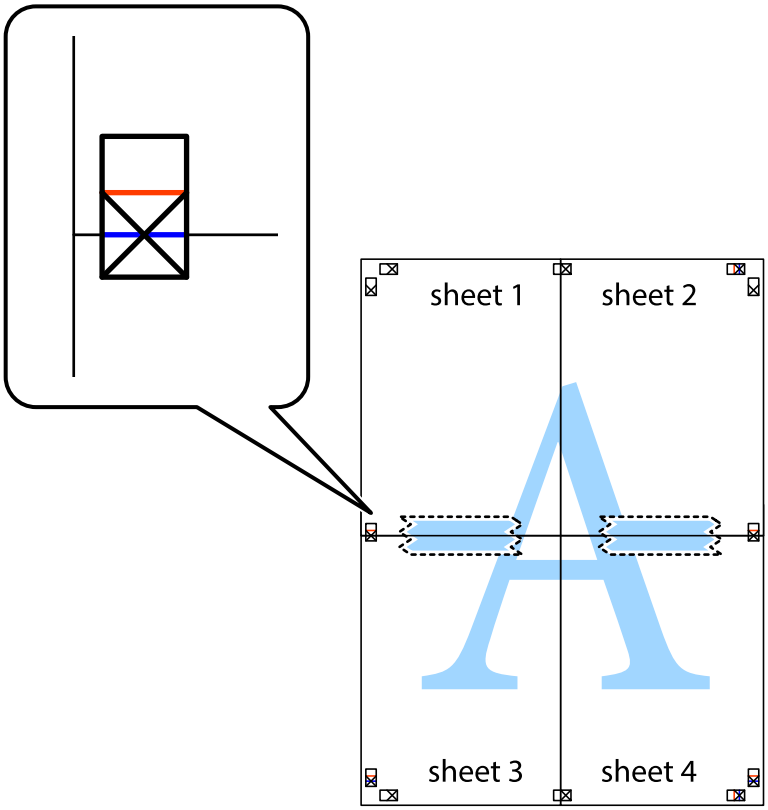

8. Cut the taped sheets in two along the horizontal red line through the alignment markers (this time, the line above the cross marks).

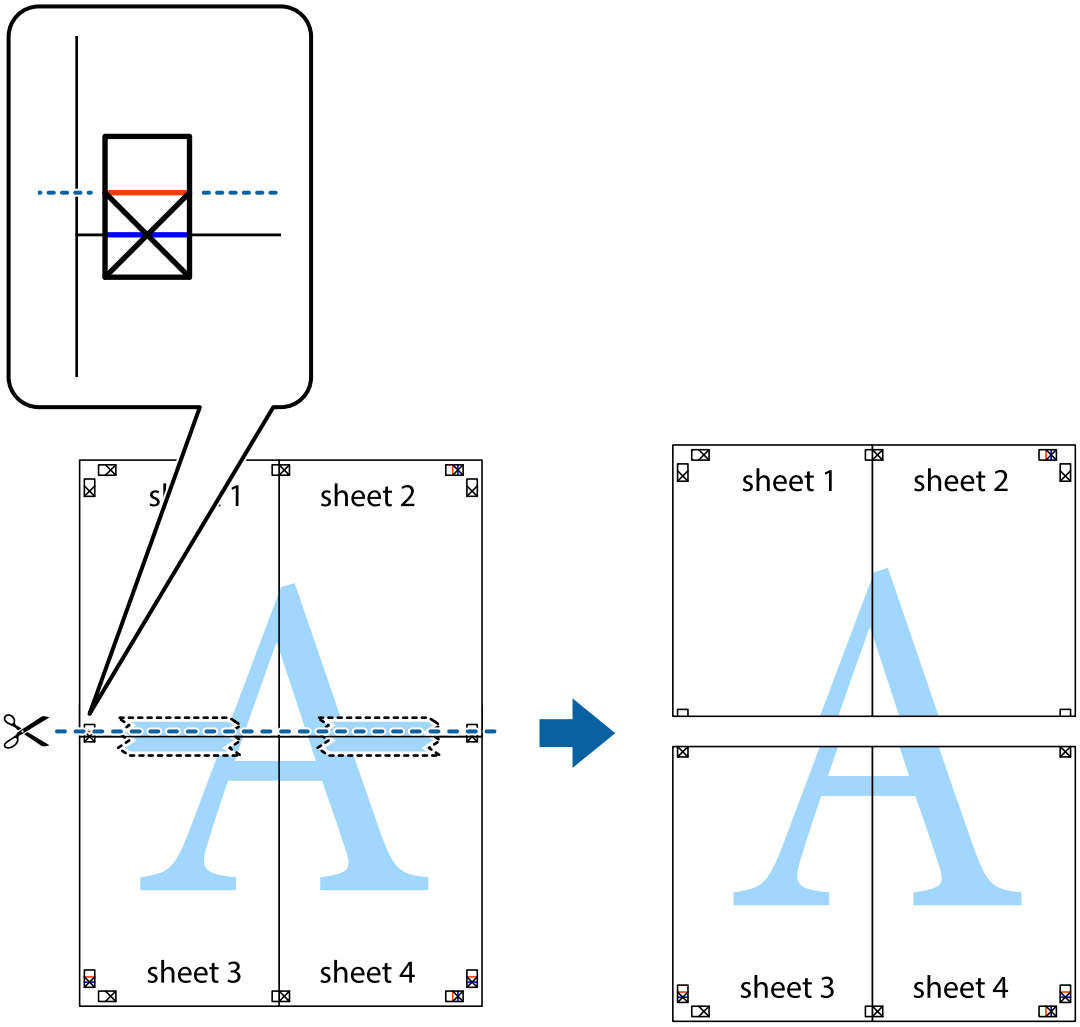

9. Tape the sheets together from the back.

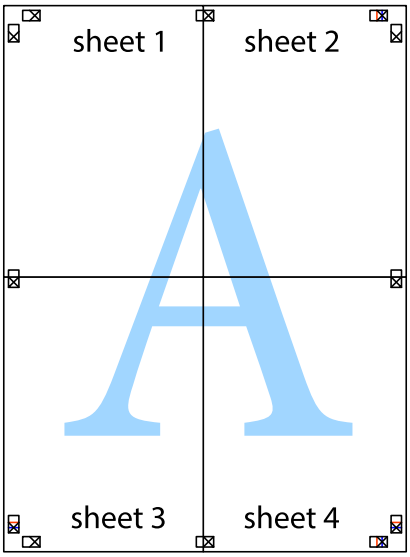

10. Cut off the remaining margins along the outer guide.

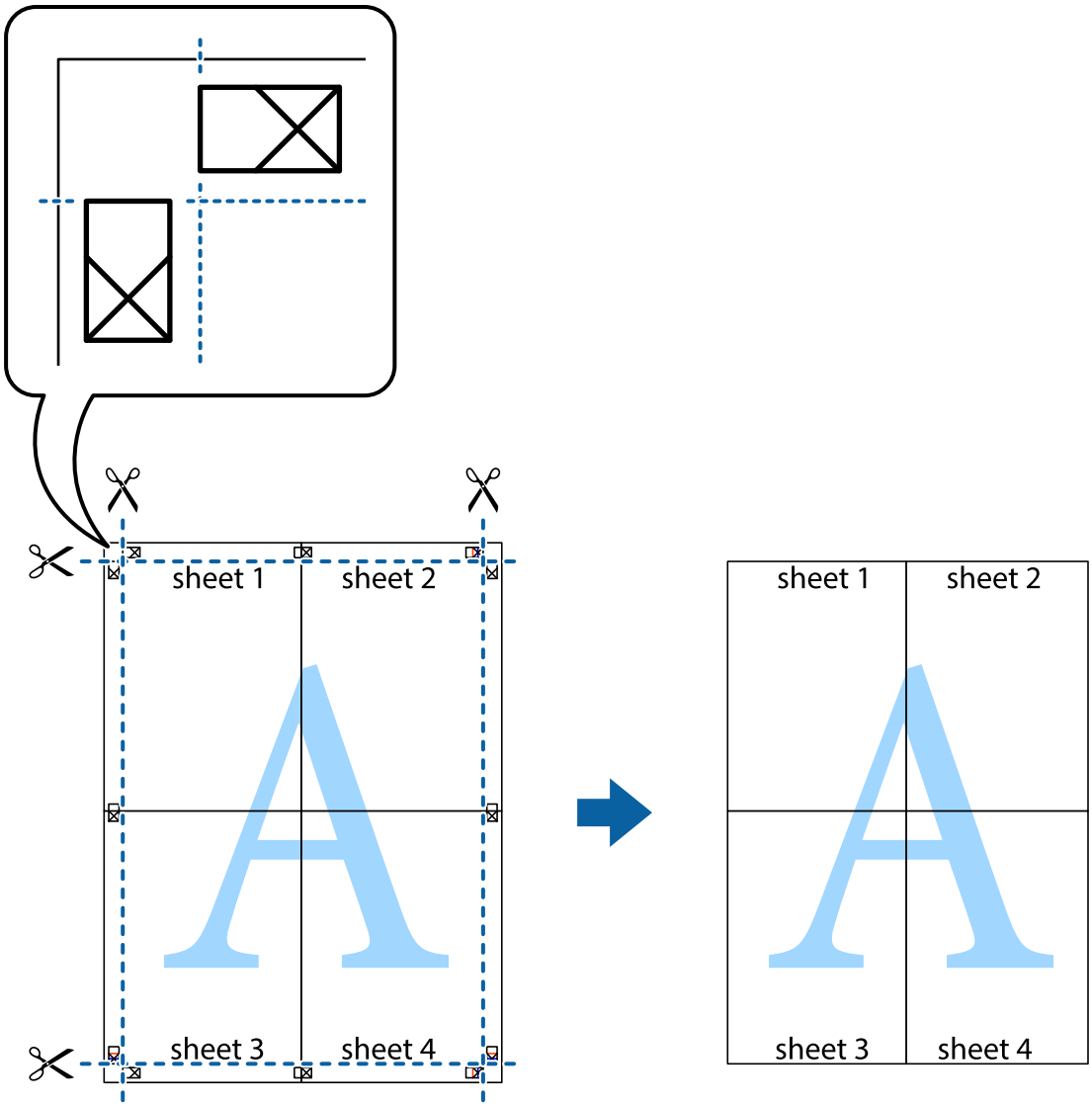

Printing Using Advanced Features

This section introduces a variety of additional layout and printing features available on the printer driver.

Related Information

➡ "Windows Printer Driver" on page 107
➡ "Mac OS X Printer Driver" on page 110

Adding a Printing Preset to Print Easily

If you create your own preset of frequently used print settings on the printer driver, you can print easily by selecting the preset from the list.

Windows

To add your own preset, set items such as the **Document Size** and **Paper Type** on the **Main** or **More Options** tab, and then click **Add/Remove Presets** in **Printing Presets**.

Note:
*To delete an added preset, click **Add/Remove Presets**, select the preset name you want to delete from the list, and then delete it.*

Mac OS X

Access the print dialog. To add your own preset, set items such as the **Paper Size** and **Media Type**, and then save the current settings as the preset in the **Presets** setting.

Note:
*To delete an added preset, click **Presets** > **Show Presets**, select the preset name you want to delete from the list, and then delete it.*

Printing a Reduced or Enlarged Document

You can reduce or enlarge the size of a document by a specific percentage.

Windows

Note:
This feature is not available for borderless printing.

Set the **Document Size** on the **More Options** tab. Select **Reduce/Enlarge Document**, **Zoom to**, and then enter a percentage.

Mac OS X

Note:
Operations differ depending on the application. See the application's help for details.

Select **Page Setup** (or **Print**) from the **File** menu. Select the printer from **Format For**, select the paper size, and then enter a percentage in **Scale**. Close the window, and then print following the basic printing instructions.

Adjusting the Print Color

You can adjust the colors used in the print job.

PhotoEnhance produces sharper images and more vivid colors by automatically adjusting the contrast, saturation, and brightness of the original image data.

Note:
- *These adjustments are not applied to the original data.*
- ***PhotoEnhance** adjusts the color by analyzing the location of the subject. Therefore, if you have changed the location of the subject by reducing, enlarging, cropping, or rotating the image, the color may change unexpectedly. Selecting the borderless setting also changes the location of the subject resulting in changes in color. If the image is out of focus, the tone may be unnatural. If the color is changed or becomes unnatural, print in a mode other than **PhotoEnhance**.*

Windows

Select the method of color correction from **Color Correction** on the **More Options** tab.

If you select **Automatic**, the colors are automatically adjusted to match the paper type and print quality settings. If you select **Custom** and click **Advanced**, you can make your own settings.

Mac OS X

Access the print dialog. Select **Color Matching** from the pop-up menu, and then select **EPSON Color Controls**. Select **Color Options** from the pop-up menu, and then select one of the available options. Click the arrow next to **Advanced Settings** and make the appropriate settings.

Printing a Watermark (for Windows Only)

You can print a watermark such as "Confidential" on your printouts. You can also add your own watermark.

Note:
This feature is not available with borderless printing.

Click **Watermark Features** on the **More Options** tab, and then select a watermark. Click **Settings** to change details such as the density and position of the watermark.

Printing a Header and Footer (for Windows Only)

You can print information such as a user name and printing date as headers or footers.

Click **Watermark Features** in the **More Options** tab, and then select **Header/Footer**. Click **Settings** and select necessary items from the drop-down list.

Printing Photos Using Epson Easy Photo Print

Epson Easy Photo Print lets you lay out and print photos easily on various types of paper. See the application's help for details.

Note:
- *By printing on genuine Epson photo paper, the ink quality is maximized and the printouts are vivid and clear.*
- *To perform borderless printing using a commercially available application, make the following settings.*
  - *Create the image data to fully fit the paper size and if a margin setting is available in the application you are using, set the margin to 0 mm.*
  - *Enable the borderless printing setting in the printer driver.*

Related Information

➡ "Epson Easy Photo Print" on page 114
➡ "Installing Applications" on page 117

Printing from Smart Devices

Using Epson iPrint

Epson iPrint is an application that allows you to print photos, documents, and web pages from a smart device such as a smartphone or tablet. You can use local print, printing from a smart device that is connected to the same wireless network as your printer, or remote print, printing from a remote location over the Internet. To use remote print, register your printer in the Epson Connect service.

Related Information

➡ "Epson Connect Service" on page 105

Installing Epson iPrint

You can install Epson iPrint on your smart device from the following URL or QR code.

http://ipr.to/a

Printing Using Epson iPrint

Start Epson iPrint from your smart device and select the item you want to use from the home screen.

Printing

The following screens are subject to change without notice.

❶	Home screen displayed when the application is started.
❷	Displays information on how to setup the printer and a FAQ.
❸	Displays the screen where you can select the printer and make printer settings. Once you have selected the printer, you do not need to select it again from the next time.
❹	Select what you want to print such as photos, documents, and web pages.
❺	Displays the screen to make print settings such as paper size and paper type.
❻	Displays the paper size. When this is displayed as a button, press it to display the paper settings currently set on the printer.
❼	Displays photos and documents you selected.
❽	Starts printing.

Note:
To print from the document menu using iPhone, iPad, and iPod touch running iOS, start Epson iPrint after transferring the document you want to print using the file sharing function in iTunes.

Using AirPrint

AirPrint enables instant wireless printing from iPhone, iPad, and iPod touch with the latest version of iOS, and Mac with the latest version of OS X.

Note:
If you disabled paper configuration messages on your product control panel, you cannot use AirPrint. See the link below to enable the messages, if necessary.

1. Load paper in your product.
2. Set up your product for wireless printing. See the link below.

   http://epson.sn

3. Connect your Apple device to the same wireless network that your product is using.
4. Print from your device to your product.

   Note:
   For details, see the AirPrint page on the Apple website.

Related Information

➡ "Loading Paper in the Rear Paper Feed" on page 36

Canceling Printing

Note:
- ❏ *In Windows, you cannot cancel a print job from the computer once it has been completely sent to the printer. In this case, cancel the print job by using the printer's control panel.*
- ❏ *When printing several pages from Mac OS X, you cannot cancel all of the jobs by using the control panel. In this case, cancel the print job from the computer.*
- ❏ *If you have sent a print job from Mac OS X v10.6.8 through the network, you may not be able to cancel printing from the computer. In this case, cancel the print job by using the printer's control panel.*

Canceling Printing - Printer Button

Press the button to cancel the print job in progress.

Canceling Printing - Windows

1. Access the printer driver window.
2. Select the **Maintenance** tab.
3. Click **Print Queue**.
4. Right-click on the job you want to cancel and then select **Cancel**.

Related Information

➡ "Windows Printer Driver" on page 107

Canceling Printing - Mac OS X

1. Click the printer icon in the **Dock**.
2. Select the job you want to cancel.
3. Cancel the job.
   - ❏ Mac OS X v10.8.x or later

     Click ⊗ next to the progress meter.
   - ❏ Mac OS X v10.6.8 to v10.7.x

     Click **Delete**.

Copying

1. Load paper in the printer.

   > **Important:**
   > *Make the paper settings on the control panel.*

2. Place the originals.

3. Enter **Copy** from the home screen using the ◀ or ▶ button, and then press the OK button.

4. Set the number of copies using the ▲ or ▼ button.

5. Select color copy or monochrome copy using the ◀ or ▶ button.

6. Press the OK button to display and check the print settings. To change the settings, press the ▼ button, select the setting items using the ▲ or ▼ button and change settings using the ◀ or ▶ button. When you have finished, press the OK button.

   Note:
   If you want to copy by reducing or enlarging the size of a document by a specific percentage, select any item other than ***Auto Fit*** *as the* ***Reduce/Enlarge*** *setting, and then press the OK button. Specify a percentage in* ***Custom Size****. You can change the percentage in increments of 10% by holding down the ◀ or ▶ button.*

7. Press the ⊡ button.

   Note:
   The color, size, and border of the copied image are slightly different from the original.

Related Information

➡ "Loading Paper in the Rear Paper Feed" on page 36
➡ "Placing Originals on the Scanner Glass" on page 40
➡ "Menu Options for Copy Mode" on page 69

Menu Options for Copy Mode

Note:
Available menus vary depending on the layout you selected.

The number of copies

Enter the number of copies.

Color

Copies the original in color.

B&W

Copies the original in black and white (monochrome).

Layout

❏ With Border

Copies with margins around the edges.

❏ Borderless

Copies without margins around the edges. The image is enlarged a little to remove margins from the edges of the paper.

❏ A4, 2-up Copy

Copies two A4 single-sided originals onto a single sheet of A4 size paper in 2-up layout.

❏ A4, Book/2-up

Copies two A4 facing pages of a book and so on onto a single sheet of A4 size paper in 2-up layout.

Reduce/Enlarge

Enlarges or reduces the originals.

❏ Actual Size

Copies at 100 % magnification.

❏ Auto Fit

Detects the scan area and automatically enlarges or reduces the original to fit to the paper size you selected. When there are white margins around the original, the white margins from the corner mark of the scanner glass are detected as the scan area, but the margins at the opposite side may be cropped.

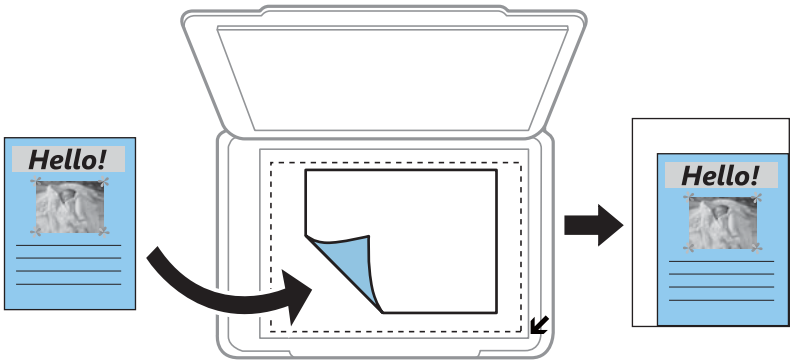

❏ Custom

Select to specify the magnification to enlarge or reduce the original.

Custom Size

Specifies the magnification used to enlarge or reduce the original within a range of 25 to 400%.

Paper Size

Select the paper size you loaded.

Paper Type

Select the paper type you loaded.

Quality

Select the print quality. **Draft** provides faster printing, but the printouts may be faint. **Best** provides higher quality printing, but the printing speed may be slower.

For users in Western Europe, the draft mode is not available.

Density

Increase the level of density by pressing the ▶ button when the copying results are faint. Decrease the level of density by pressing the ◀ button when ink smears.

Scanning

Scanning Using the Control Panel

Scanning to a Computer

You can save the scanned image to a computer.

> ***Important:***
> *Make sure you have installed Epson Scan 2 and Epson Event Manager on your computer before using this feature.*

1. Place the originals.

2. Enter **Scan** from the home screen using the ◀ or ▶ button, and then press the OK button.

3. Select how to save the scanned image to a computer from the following menus using the ◀ or ▶ button, and then press the OK button.
   - ❏ **To Computer (JPEG)**: Saves the scanned image in JPEG format.
   - ❏ **To Computer (PDF)**: Saves the scanned image in PDF format.
   - ❏ **To Computer (Email)**: Starts the email client on your computer, and then automatically attaches it to an email.

4. Select the computer to which you want to save the scanned images.

   Note:
   - ❏ *You can change the scan settings such as the scanning size, folder to save, or save format, by using Epson Event Manager.*
   - ❏ *When the printer is connected to a network, you can select the computer to which you want to save the scanned image. Up to 20 computers can be displayed on the printer's control panel.*
   - ❏ *When the computer to which you want to save the scanned images is detected on the network, the initial 15 characters of the computer name are displayed on the control panel. If you set **Network Scan Name (Alphanumeric)** on Epson Event Manager, it is displayed on the control panel.*

5. Press the ◇ button.

   Note:
   The color, size, and border of the scanned image will not be exactly the same as the original.

Related Information

➡ "Placing Originals on the Scanner Glass" on page 40

➡ "Epson Event Manager" on page 113

Scanning to a Computer (WSD)

Note:

❏ *This feature is only available for computers running English version of Windows 10/Windows 8.1/Windows 8/Windows 7/Windows Vista.*

❏ *If you are using Windows 7/Windows Vista, you need to setup your computer in advance using this feature.*

1. Place the originals.

2. Enter **Scan** from the home screen using the ◀ or ▶ button, and then press the OK button.

3. Select **To Computer (WSD)** using the ◀ or ▶ button, and then press the OK button.

4. Select a computer.

5. Press the ⊡ button.

   Note:
   The color, size, and border of the scanned image will not be exactly the same as the original.

Related Information

➡ "Placing Originals on the Scanner Glass" on page 40

Setting Up a WSD Port

This section explains how to set up a WSD port for Windows 7/Windows Vista.

Note:
For Windows 10/Windows 8.1/Windows 8, the WSD port is set up automatically.

The following is necessary to set up a WSD port.

❏ The printer and the computer are connected to the network.

❏ The printer driver is installed on the computer.

1. Turn the printer on.

2. Click start, and then click **Network** on the computer.

3. Right-click the printer, and then click **Install**.

   Click **Continue** when the **User Account Control** screen is displayed.

Click **Uninstall** and start again if the **Uninstall** screen is displayed.

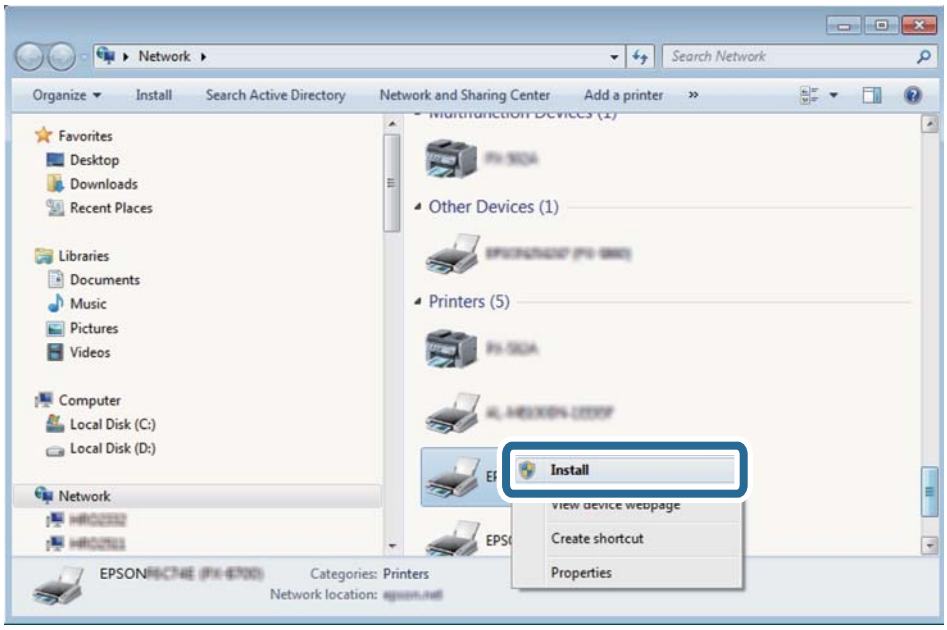

Note:
The printer name you set on the network and model name (EPSON XXXXXX (XX-XXXX)) are displayed on the network screen. You can check the printer's name set on the network from the printer's control panel or by printing a network status sheet.

4. Click **Your device is ready to use**.

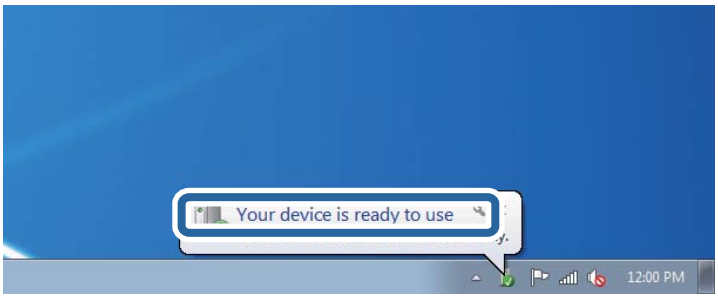

5. Check the message, and then click **Close**.

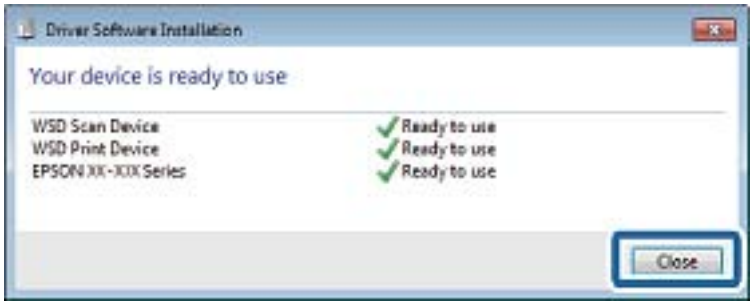

6. Open the **Devices and Printers** screen.

❏ Windows 7

Click start > **Control Panel** > **Hardware and Sound** (or **Hardware**) > **Devices and Printers**.

❏ Windows Vista

Click start > **Control Panel** > **Hardware and Sound** > **Printers**.

7. Check that an icon with the printer's name on the network is displayed.

   Select the printer name when using with WSD.

Related Information

➡ "Printing a Network Status Sheet" on page 30

Scanning from a Computer

Scanning Using Epson Scan 2

You can scan by using the scanner driver "Epson Scan 2". See the Epson Scan 2 help for an explanation of each setting item.

Related Information

➡ "Epson Scan 2 (Scanner Driver)" on page 113

Scanning Documents (Document Mode)

Using **Document Mode** in Epson Scan 2, you can scan originals using detailed settings that are suitable for text documents.

1. Place the originals.

2. Start Epson Scan 2.

3. Select **Document Mode** from the **Mode** list.

4. Make the following settings on the **Main Settings** tab.

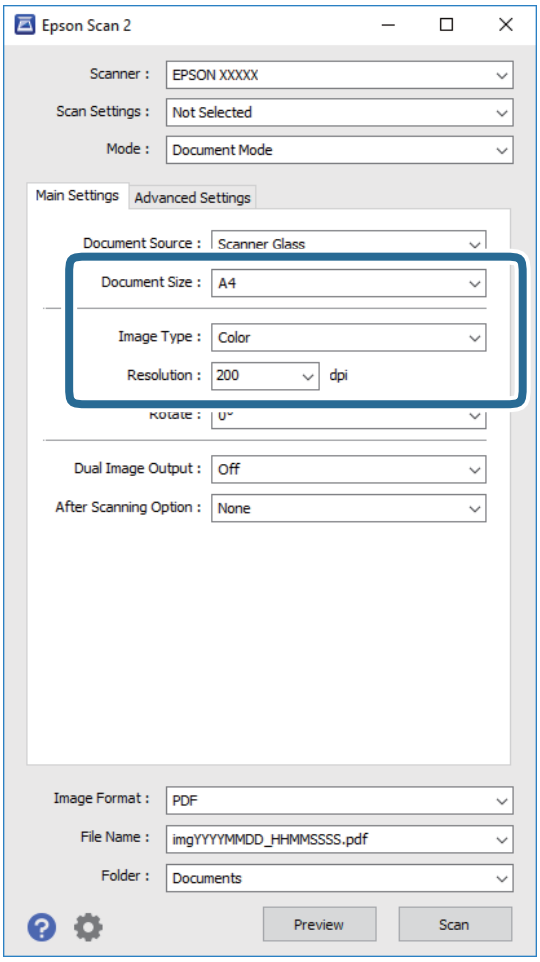

- ❏ **Document Size**: Select the size of the original you placed.
- ❏ **Image Type**: Select the color for saving the scanned image.
- ❏ **Resolution**: Select the resolution.

Note:
*The **Document Source** setting is fixed as **Scanner Glass**. You cannot change this setting.*

5. Make other scan settings if necessary.
   - ❏ You can preview the scanned image by clicking the **Preview** button. The preview window opens, and the previewed image is displayed.
   - ❏ On the **Advanced Settings** tab, you can make detailed image adjustment settings that are suitable for text documents, such as the following.
     - ❏ **Unsharp Mask**: You can enhance and sharpen the outlines of the image.
     - ❏ **Descreening**: You can remove moiré patterns (web-like shadows) that appear when scanning printed papers such as a magazine.
     - ❏ **Text Enhancement**: You can make blurred letters in the original clear and sharp.
     - ❏ **Auto Area Segmentation**: You can make letters clear and images smooth when performing black and white scanning for a document that contains images.

Note:
The items may not be available depending on other settings you made.

6. Set the file saving settings.

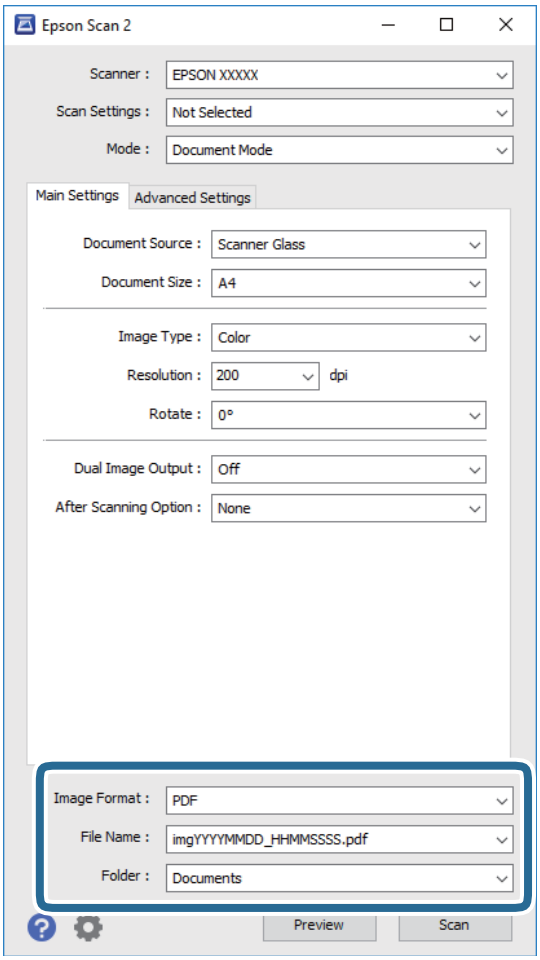

- ❑ **Image Format**: Select the save format from the list.

  You can make detailed settings for each save format except BITMAP and PNG. Select **Options** from the list after selecting the save format.

- ❑ **File Name**: Confirm the save file name displayed.

  You can change settings for the file name by selecting **Settings** from the list.

- ❑ **Folder**: Select the save folder for the scanned image from the list.

  You can select another folder or create a new folder by selecting **Select** from the list.

7. Click **Scan**.

Related Information

➡ "Placing Originals on the Scanner Glass" on page 40

Scanning Photos or Pictures (Photo Mode)

Using **Photo Mode** in Epson Scan 2, you can scan originals with wide variety of image adjustment features that are suitable for photos or pictures.

Scanning

1. Place the originals.

   By placing multiple originals on the scanner glass, you can scan them all at the same time. Make sure there is a gap of at least 20 mm between the originals.

2. Start Epson Scan 2.

3. Select **Photo Mode** from the **Mode** list.

4. Make the following settings on the **Main Settings** tab.

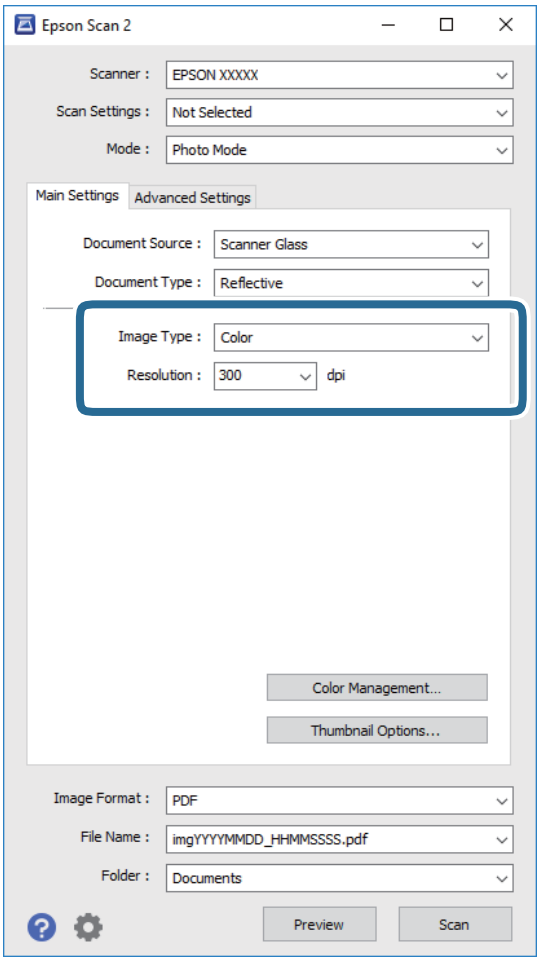

❏ **Image Type**: Select the color for saving the scanned image.

❏ **Resolution**: Select the resolution.

Note:
*The **Document Source** setting is fixed as **Scanner Glass**, and the **Document Type** setting is fixed as **Reflective**. (**Reflective** means originals which are not transparent, for example ordinary papers or photos.) You cannot change these settings.*

5. Click **Preview**.

   The preview window opens, and the previewed images are displayed as thumbnails.

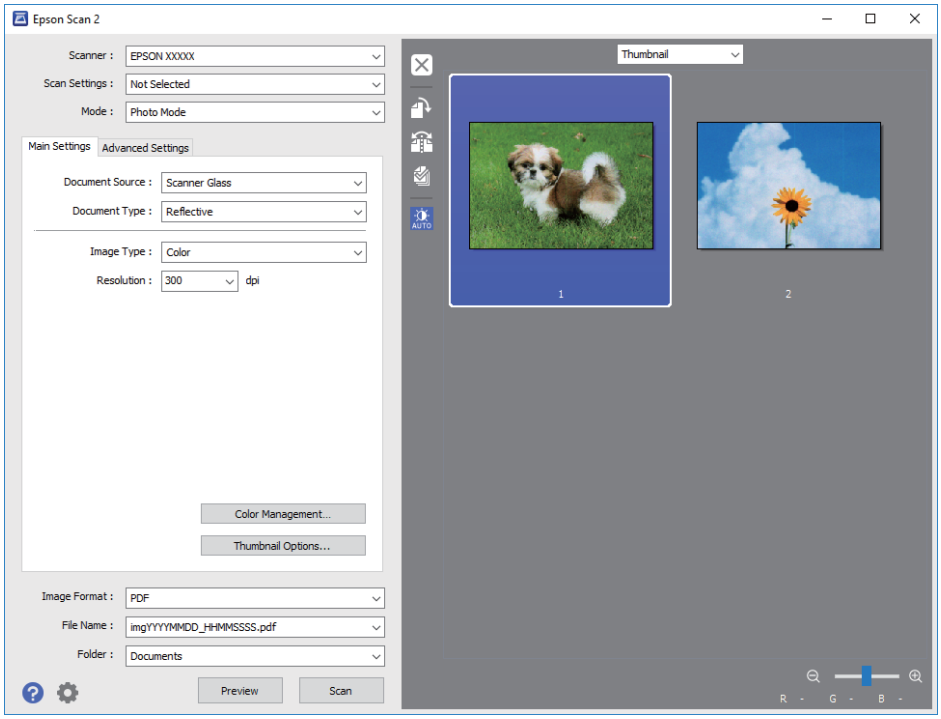

Note:
To preview the entire scanned area, select ***Normal*** *from the list at the top of the preview widow.*

6. Confirm the preview, and make image adjustment settings on the **Advanced Settings** tab if necessary.

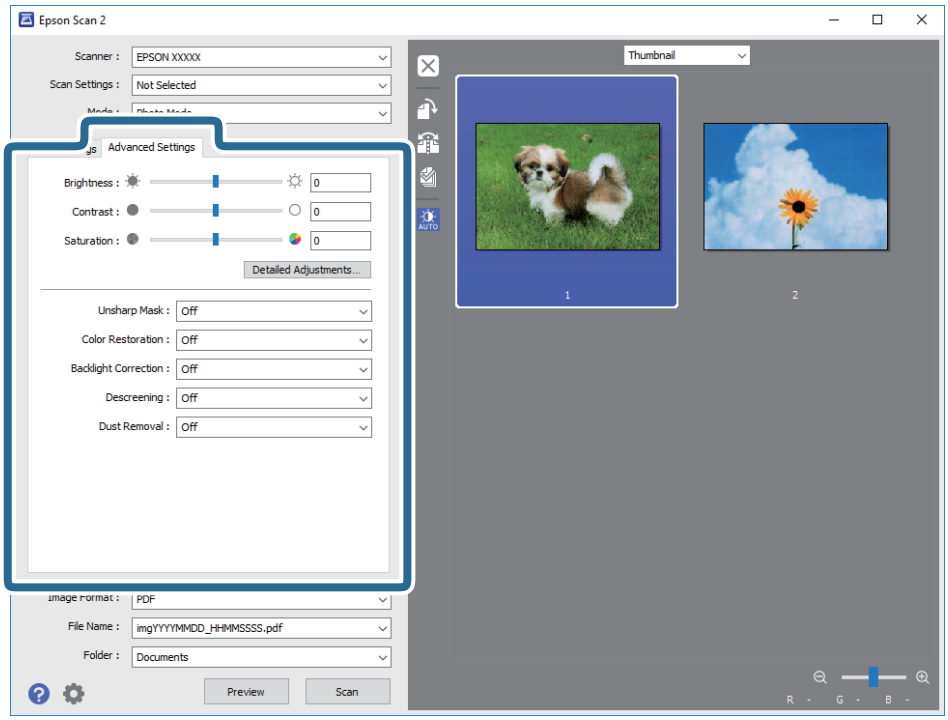

You can adjust the scanned image using detailed settings that are suitable for photos or pictures, such as the following.

❏ **Brightness**: You can adjust the brightness for the scanned image.

❏ **Contrast**: You can adjust the contrast for the scanned image.

❏ **Saturation**: You can adjust the saturation (color vividness) for the scanned image.

❏ **Unsharp Mask**: You can enhance and sharpen the outlines of the scanned image.

❏ **Color Restoration**: You can correct images that have faded to return them to their original colors.

❏ **Backlight Correction**: You can lighten scanned images that are dark due to backlight.

❏ **Descreening**: You can remove moiré patterns (web-like shadows) that appear when scanning printed papers such as a magazine.

❏ **Dust Removal**: You can remove dust on the scanned image.

Note:

❏ *The items may not be available depending on other settings you made.*

❏ *Depending on the original, the scanned image may not be adjusted correctly.*

❏ *When multiple thumbnails are created, you can adjust the image quality for each thumbnail. Depending on the adjustment items, you can adjust the quality of scanned images all together by selecting multiple thumbnails.*

7. Set the file saving settings.

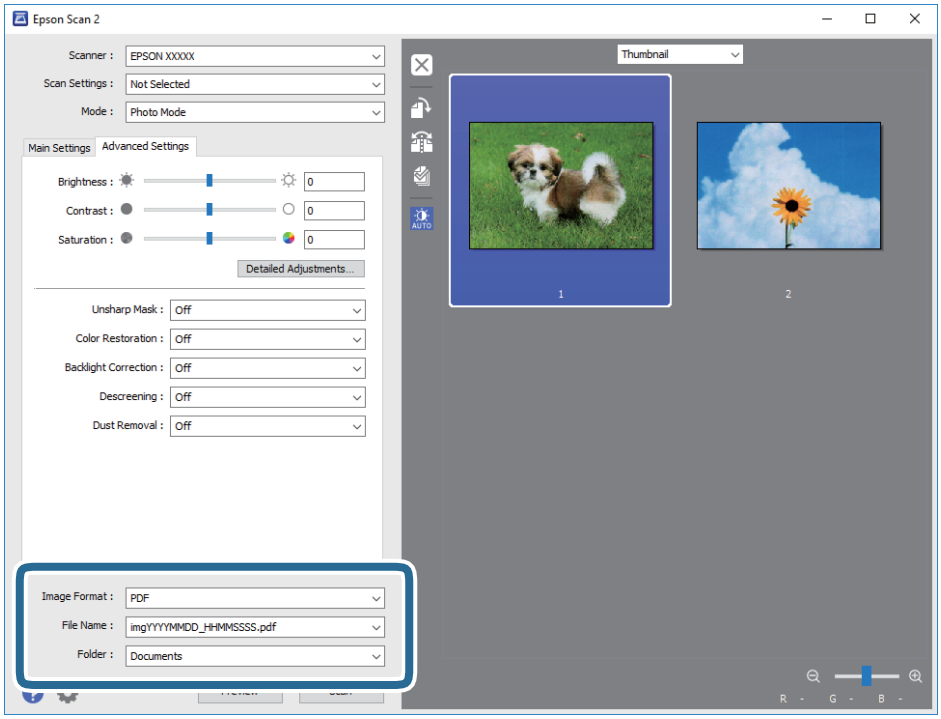

❏ **Image Format**: Select the save format from the list.

You can make detailed settings for each save format except BITMAP and PNG. Select **Options** from the list after selecting the save format.

❏ **File Name**: Confirm the save file name displayed.

You can change settings for the file name by selecting **Settings** from the list.

❏ **Folder**: Select the save folder for the scanned image from the list.
You can select another folder or create a new folder by selecting **Select** from the list.

8. Click **Scan**.

Related Information

➡ "Placing Originals on the Scanner Glass" on page 40
➡ "Placing Multiple Photos for Scanning" on page 42

Scanning from Smart Devices

Epson iPrint is an application that allows you to scan photos and documents from a smart device, such as a smartphone or tablet, that is connected to the same wireless network as your printer. You can save the scanned data on a smart device or to Cloud services, send it by email, or print it.

Installing Epson iPrint

You can install Epson iPrint on your smart device from the following URL or QR code.

http://ipr.to/a

Scanning Using Epson iPrint

Start Epson iPrint from your smart device and select the item you want to use from the home screen.

Scanning

The following screens are subject to change without notice.

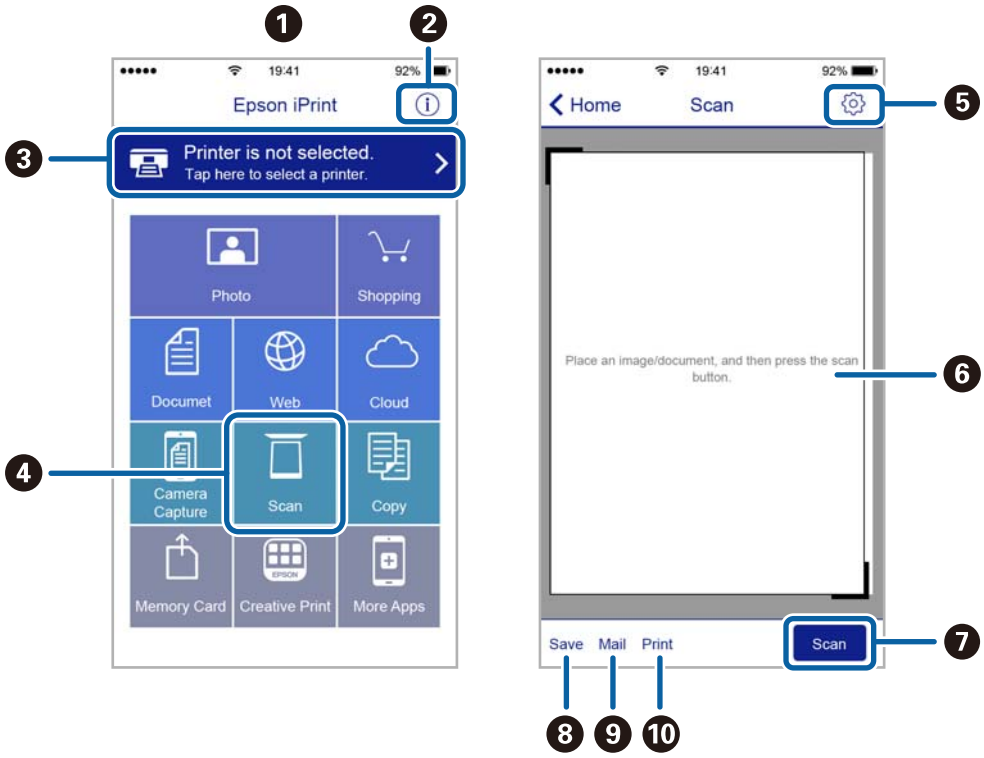

❶	Home screen displayed when the application is started.
❷	Displays information on how to setup the printer and a FAQ.
❸	Displays the screen where you can select the printer and make printer settings. Once you have selected the printer, you do not need to select it again from the next time.
❹	Displays the scanning screen.
❺	Displays the screen where you can make scan settings such as resolution.
❻	Displays scanned images.
❼	Starts scanning.
❽	Displays the screen where you can save scanned data to a smart device or Cloud services.
❾	Displays the screen where you can send scanned data by email.
❿	Displays the screen where you can print scanned data.

Replacing Ink Cartridges

Checking the Ink Levels

You can check the approximate ink levels from the control panel or the computer.

Checking the Ink Levels - Control Panel

1. Enter **Setup** from the home screen using the ◀ or ▶ button, and then press the OK button.
2. Select **Ink Levels** using the ◀ or ▶ button, and then press the OK button.

Checking the Ink Levels - Windows

1. Access the printer driver window.
2. Click **Ink Levels** on the **Main** tab.

   Note:
   *If **EPSON Status Monitor 3** is disabled, the ink levels are not displayed. Click **Extended Settings** on the **Maintenance** tab, and then select **Enable EPSON Status Monitor 3**.*

Related Information

➡ "Windows Printer Driver" on page 107

Checking the Ink Levels - Mac OS X

1. Select **System Preferences** from the menu > **Printers & Scanners** (or **Print & Scan**, **Print & Fax**), and then select the printer.
2. Click **Options & Supplies** > **Utility** > **Open Printer Utility**.
3. Click **EPSON Status Monitor**.

Ink Cartridge Codes

Epson recommends the use of genuine Epson ink cartridges. Epson cannot guarantee the quality or reliability of non-genuine ink. The use of non-genuine ink may cause damage that is not covered by Epson's warranties, and under certain circumstances, may cause erratic printer behavior. Information about non-genuine ink levels may not be displayed.

The following are the codes for genuine Epson ink cartridges.

Product	Icon	BK: Black	C: Cyan	M: Magenta	Y: Yellow
XP-342, XP-345	Strawberry	29 29XL*	29 29XL*	29 29XL*	29 29XL*
XP-343	Cherries	36 36XL*	36 36XL*	36 36XL*	36 36XL*

* "XL" and "XXL" indicate large cartridge.

Note:

- *Not all cartridges are available in all regions.*
- *Ink cartridge codes may vary by location. For the correct codes in your area, contact Epson support.*
- *For users in Europe, visit the following website for information on Epson's ink cartridge yields.*
  http://www.epson.eu/pageyield

Related Information

➡ "Technical Support Web Site" on page 155

Ink Cartridge Handling Precautions

Read the following instructions before replacing ink cartridges.

Handling precautions

- Store ink cartridges at normal room temperature and keep them away from direct sunlight.
- Epson recommends using the ink cartridge before the date printed on the package.
- For best results, use up ink cartridge within six months of opening the package.
- For best results, store ink cartridge packages with their bottom down.
- After bringing an ink cartridge inside from a cold storage site, allow it to warm up at room temperature for at least three hours before using it.
- Do not open the ink cartridge package until you are ready to install it in the printer. The cartridge is vacuum packed to maintain its reliability. If you leave a cartridge unpacked for a long time before using it, normal printing may not be possible.
- Be careful not to break the hooks on the side of the ink cartridge when you remove it from the package.

Replacing Ink Cartridges

❏ You must remove the yellow tape from the cartridge before installing it; otherwise, print quality may decline or you may not be able to print. Do not remove or tear the label on the cartridge; this can cause leakage.

❏ Do not remove the transparent seal from the bottom of the cartridge; otherwise, the cartridge may become unusable.

❏ Do not touch the sections shown in the illustration. Doing so may prevent normal operation and printing.

❏ Install all ink cartridges; otherwise you cannot print.

❏ Do not replace ink cartridges with the power off. Do not move the print head by hand; otherwise, you may damage the printer.

❏ Do not turn off the printer during ink charging. If the ink charging is incomplete, you may not be able to print.

- ❏ Do not leave the printer with the ink cartridges removed or do not turn off the printer during cartridge replacement. Otherwise, ink remaining in the print head nozzles will dry out and you may not be able to print.
- ❏ If you need to remove an ink cartridge temporarily, make sure you protect the ink supply area from dirt and dust. Store the ink cartridge in the same environment as the printer, with the ink supply port facing down or sideways. Do not store ink cartridges with the ink supply port facing up. Because the ink supply port is equipped with a valve designed to contain the release of excess ink, there is no need to supply your own covers or plugs.
- ❏ Removed ink cartridges may have ink around the ink supply port, so be careful not to get any ink on the surrounding area when removing the cartridges.
- ❏ This printer uses ink cartridges equipped with a green chip that monitors information such as the amount of remaining ink for each cartridge. This means that even if the cartridge is removed from the printer before it is expended, you can still use the cartridge after reinserting it back into the printer. However, when reinserting a cartridge, some ink may be consumed to guarantee printer performance.
- ❏ For maximum ink efficiency, only remove an ink cartridge when you are ready to replace it. Ink cartridges with low ink status may not be used when reinserted.
- ❏ To ensure you receive premium print quality and to help protect your print head, a variable ink safety reserve remains in the cartridge when your printer indicates to replace the cartridge. The yields quoted for you do not include this reserve.
- ❏ Although the ink cartridges may contain recycled materials, this does not affect printer function or performance.
- ❏ Specifications and appearance of the ink cartridge are subject to change without prior notice for improvement.
- ❏ Do not disassemble or remodel the ink cartridge, otherwise you may not be able to print normally.
- ❏ You cannot use the cartridges that came with the printer for the replacement.
- ❏ Quoted yields may vary depending on the images that you are printing, the paper type that you are using, the frequency of your prints and environmental conditions such as temperature.

Ink consumption

- ❏ To maintain optimum print head performance, some ink is consumed from all cartridges during maintenance operations. Ink may also be consumed when you replace ink cartridges or turn the printer on.
- ❏ When printing in monochrome or grayscale, color inks instead of black ink may be used depending on the paper type or print quality settings. This is because a mixture of color inks is used to create black.
- ❏ The ink in the ink cartridges supplied with your printer is partly used during initial setup. In order to produce high quality printouts, the print head in your printer will be fully charged with ink. This one-off process consumes a quantity of ink and therefore these cartridges may print fewer pages compared to subsequent ink cartridges.

Replacing Ink Cartridges

> ⚠ ***Caution:***
> *Be careful not to trap your hand or fingers when opening or closing the scanner unit. Otherwise you may be injured.*

Replacing Ink Cartridges

Note:

- *You can continue printing even after the printer indicates that the ink is low. However, prepare new ink cartridges as soon as possible.*
- *If you replace the ink cartridges while copying, the originals may move out of place. Press the button to cancel and replace the originals.*

1. Do one of the following.
   - When prompted to replace ink cartridges

     Check which ink cartridge needs to be replaced, and then press the OK button. Select **Replace now** using the ▲ or ▼ button, and then press the OK button.
   - When replacing ink cartridges before they are expended

     Enter **Setup** from the home screen using the ◀ or ▶ button, and then press the OK button. Select **Maintenance** using the ◀ or ▶ button, and then press the OK button. Select **Ink Cartridge Replacement** using the ◀ or ▶ button, and then press the OK button. Next, press the button.
2. When replacing the black ink cartridge, gently shake the new black ink cartridge four or five times and then remove it from its package. When replacing other color cartridges, remove the new color cartridges from their package without shaking.

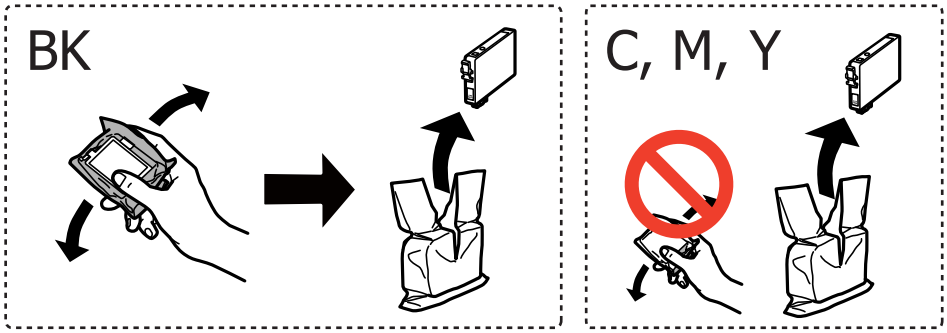

> ***Important:***
> *Do not shake cartridges after opening the package, as they may leak.*

3. Remove only the yellow tape.

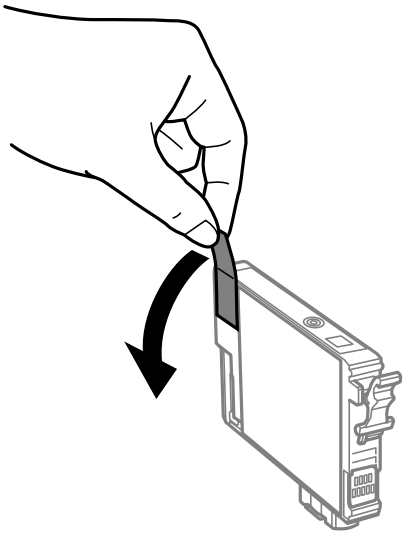

Important:

Do not touch the sections shown in the illustration. Doing so may prevent normal operation and printing.

4. Open the scanner unit with the document cover closed.

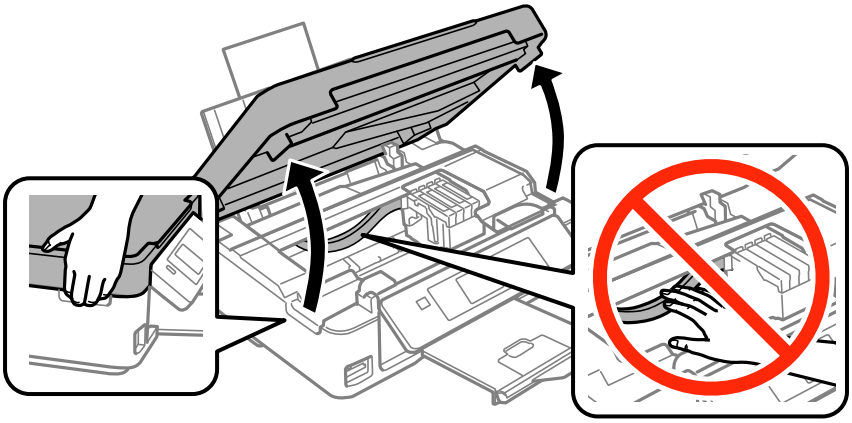

5. Squeeze the tab on the ink cartridge and pull it straight up. If you cannot remove the ink cartridge, pull it firmly.

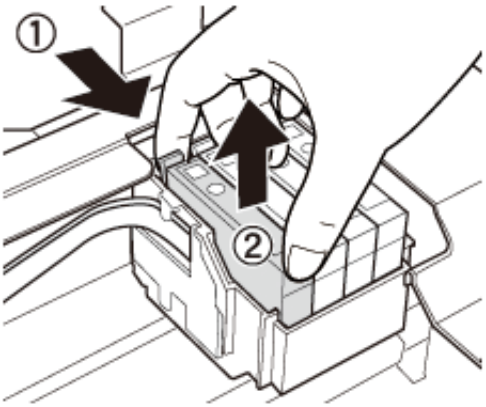

6. Insert the new ink cartridge, and then press it down firmly.

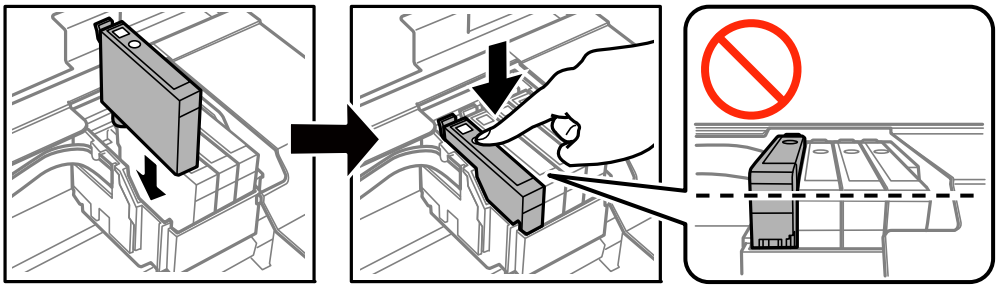

7. Close the scanner unit.

8. Press the ⊡ button.

   Ink charging starts.

> **Important:**
> *Do not turn off the printer during ink charging. If the ink charging is incomplete, you may not be able to print.*

Related Information

➡ "Ink Cartridge Codes" on page 83
➡ "Ink Cartridge Handling Precautions" on page 84

Temporarily Printing with Black Ink

When color ink is expended and black ink still remains when printing from a computer, you can use the following settings to continue printing for a short time using only black ink.

❏ Type of paper: plain papers, Envelope

❏ Color: **Grayscale**

❏ Borderless: Not selected

❏ EPSON Status Monitor 3: Enabled (for Windows only)

Because this feature is only available for approximately five days, replace the expended ink cartridge as soon as possible.

Note:

❏ *If **EPSON Status Monitor 3** is disabled, access the printer driver, click **Extended Settings** on the **Maintenance** tab, and then select **Enable EPSON Status Monitor 3**.*

❏ *The available period varies depending on the usage conditions.*

Temporarily Printing with Black Ink - Windows

1. When the following window is displayed, cancel printing.

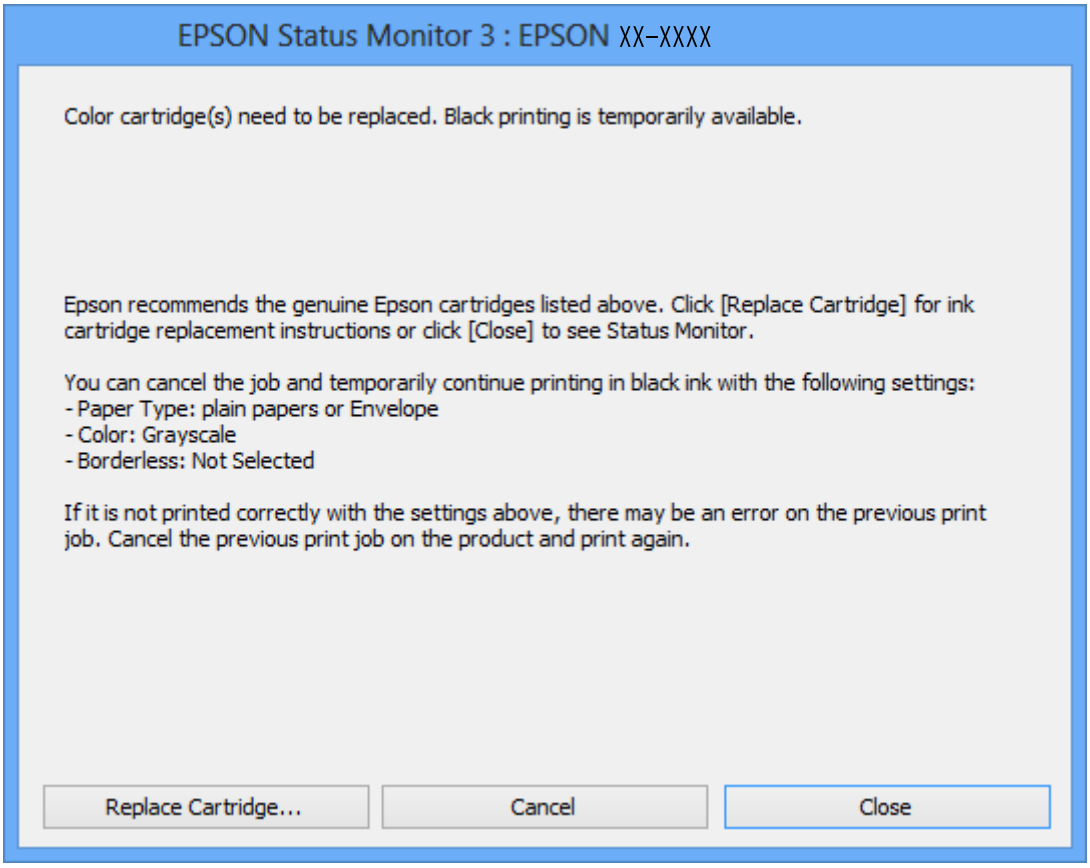

Note:
If you cannot cancel printing from the computer, cancel using the printer's control panel.

2. Access the printer driver window.

3. Clear **Borderless** on the **Main** tab.

4. Select **plain papers** or **Envelope** as the **Paper Type** setting on the **Main** tab.

5. Select **Grayscale**.
6. Set the other items on the **Main** and **More Options** tabs as necessary, and then click **OK**.
7. Click **Print**.
8. Click **Print in Black** in the window displayed.

Related Information

➡ "Loading Paper in the Rear Paper Feed" on page 36
➡ "Printing Basics - Windows" on page 47

Temporarily Printing with Black Ink - Mac OS X

Note:
*To use this feature through a network, connect with **Bonjour**.*

1. Click the printer icon in the **Dock**.
2. Cancel the job.

   Note:
   If you cannot cancel printing from the computer, cancel using the printer's control panel.

3. Select **System Preferences** from the menu > **Printers & Scanners** (or **Print & Scan**, **Print & Fax**), and then select the printer. Click **Options & Supplies** > **Options** (or **Driver**).
4. Select **On** as the **Permit temporary black printing** setting.
5. Access the print dialog.
6. Select **Print Settings** from the pop-up menu.
7. Select any paper size except for a borderless size as the **Paper Size** setting.
8. Select **plain papers** or **Envelope** as the **Media Type** setting.
9. Select **Grayscale**.
10. Set the other items as necessary.
11. Click **Print**.

Related Information

➡ "Canceling Printing - Mac OS X" on page 68
➡ "Loading Paper in the Rear Paper Feed" on page 36
➡ "Printing Basics - Mac OS X" on page 49

Conserving Black Ink when the Black Ink Is Low (for Windows Only)

When black ink is running low and there is enough color ink remaining, you can use a mixture of color inks to create black. You can continue printing while preparing a replacement black ink cartridge.

This feature is only available when you select the following settings in the printer driver.

- ❏ Paper Type: **plain papers**
- ❏ Quality: **Standard**
- ❏ EPSON Status Monitor 3: Enabled

Note:

- ❏ *If **EPSON Status Monitor 3** is disabled, access the printer driver, click **Extended Settings** on the **Maintenance** tab, and then select **Enable EPSON Status Monitor 3**.*
- ❏ *Composite black looks slightly different from pure black. In addition, the print speed is reduced.*
- ❏ *To maintain the quality of the print head, black ink is also consumed.*

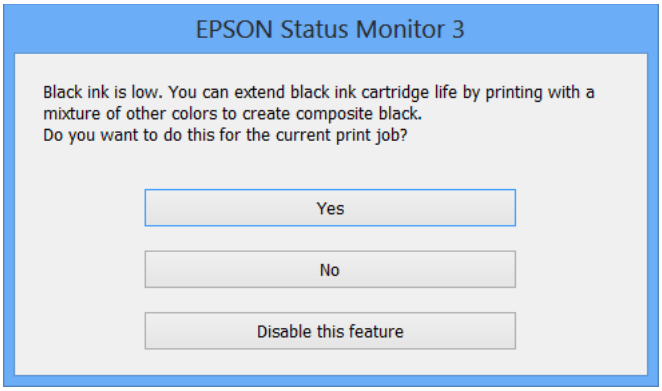

Options	Description
Yes	Select to use a mixture of color inks to create black. This window is displayed the next time you print a similar job.
No	Select to continue using the remaining black ink. This window is displayed the next time you print a similar job.
Disable this feature	Select to continue using the remaining black ink. This window is not displayed until you replace the black ink cartridge and it runs low again.

Maintaining the Printer

Checking and Cleaning the Print Head

If the nozzles are clogged, the printouts become faint, there is visible banding, or unexpected colors appear. When print quality has declined, use the nozzle check feature and check if the nozzles are clogged. If the nozzles are clogged, clean the print head.

Important:

- *Do not open the scanner unit or turn off the printer during head cleaning. If the head cleaning is incomplete, you may not be able to print.*
- *Because print head cleaning uses some ink, clean the print head only if quality declines.*
- *When ink is low, you may not be able to clean the print head.*
- *If print quality has not improved after repeating nozzle check and head cleaning about four times, wait for at least six hours without printing, and then run the nozzle check again and repeat the head cleaning if necessary. We recommend to turn off the printer. If print quality has still not improved, contact Epson support.*
- *To prevent the print head from drying out, do not unplug the printer while the power is on.*

Checking and Cleaning the Print Head - Control Panel

1. Load A4-size plain paper in the printer.
2. Enter **Setup** from the home screen using the ◀ or ▶ button, and then press the OK button.
3. Select **Maintenance** using the ◀ or ▶ button, and then press the OK button.
4. Select **Nozzle Check** using the ◀ or ▶ button, and then press the OK button.
5. Follow the on-screen instructions to print the nozzle check pattern.
6. Examine the printed pattern. If there are broken lines or missing segments as shown in the "NG" pattern, the print head nozzles may be clogged. Go to the next step. If you cannot see any broken lines or missing segments as in the following "OK" pattern, the nozzles are not clogged. Print head cleaning is not necessary. Select **No** using the ▲ or ▼ button, and then press the OK button to exit.

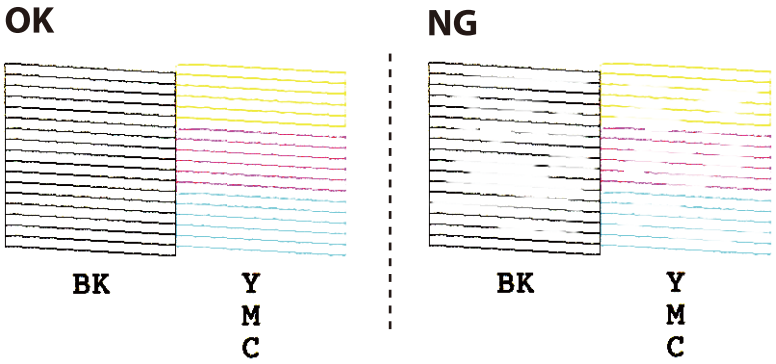

7. Select **Yes** using the ▼ or ▲ button, and then press the OK button.

8. Follow the on-screen instructions to clean the print head.

9. When cleaning is finished, select **Nozzle Check** using the ▼ or ▲ button, and then follow the on-screen instructions to print the nozzle check pattern again. Repeat cleaning and printing the pattern until all lines are printed completely.

Related Information

➡ "Loading Paper in the Rear Paper Feed" on page 36

Checking and Cleaning the Print Head - Windows

1. Load A4-size plain paper in the printer.

2. Access the printer driver window.

3. Click **Nozzle Check** on the **Maintenance** tab.

4. Follow the on-screen instructions.

Related Information

➡ "Loading Paper in the Rear Paper Feed" on page 36
➡ "Windows Printer Driver" on page 107

Checking and Cleaning the Print Head - Mac OS X

1. Load A4-size plain paper in the printer.

2. Select **System Preferences** from the menu > **Printers & Scanners** (or **Print & Scan**, **Print & Fax**), and then select the printer.

3. Click **Options & Supplies** > **Utility** > **Open Printer Utility**.

4. Click **Nozzle Check**.

5. Follow the on-screen instructions.

Related Information

➡ "Loading Paper in the Rear Paper Feed" on page 36

Aligning the Print Head

If you notice a misalignment of vertical lines or blurred images, align the print head.

Aligning the Print Head - Control Panel

1. Load A4-size plain paper in the printer.
2. Enter **Setup** from the home screen using the ◀ or ▶ button, and then press the OK button.
3. Select **Maintenance** using the ◀ or ▶ button, and then press the OK button.
4. Select **Head Alignment** using the ◀ or ▶ button, and then press the OK button.
5. Follow the on-screen instructions to print the alignment pattern.
6. Follow the on-screen instructions to align the print head. Find and select the number for the most solid pattern in each group using the ▲ or ▼ button, and then press the OK button.

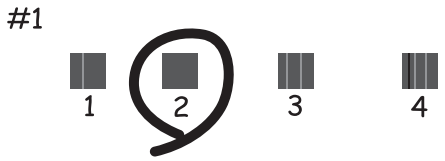

Note:
- *The test pattern may vary by model.*
- *If print quality is not improved, align the print head from a computer.*

Related Information

➡ "Loading Paper in the Rear Paper Feed" on page 36

Aligning the Print Head - Windows

1. Load A4-size plain paper in the printer.
2. Access the printer driver window.
3. Click **Print Head Alignment** on the **Maintenance** tab.
4. Follow the on-screen instructions.

Related Information

➡ "Loading Paper in the Rear Paper Feed" on page 36
➡ "Windows Printer Driver" on page 107

Aligning the Print Head - Mac OS X

1. Load A4-size plain paper in the printer.
2. Select **System Preferences** from the menu > **Printers & Scanners** (or **Print & Scan**, **Print & Fax**), and then select the printer.
3. Click **Options & Supplies** > **Utility** > **Open Printer Utility**.
4. Click **Print Head Alignment**.
5. Follow the on-screen instructions.

Related Information

➡ "Loading Paper in the Rear Paper Feed" on page 36

Cleaning the Paper Path

When the printouts are smeared or scuffed, clean the roller inside.

> ***Important:***
> *Do not use tissue paper to clean the inside of the printer. The print head nozzles may be clogged with lint.*

1. Make sure there is no dust or stains on the scanner glass and the document cover.
2. Enter **Setup** from the home screen using the ◀ or ▶ button, and then press the OK button.
3. Select **Maintenance** using the ◀ or ▶ button, and then press the OK button.
4. Select **Paper Guide Cleaning** using the ◀ or ▶ button, and then press the OK button.
5. Load A4-size plain paper in the printer.
6. Press the button.

   The paper is ejected from the printer.

   Note:
   The printer continues to make operating sounds for a while after the paper is ejected. This is normal and not a sign of a malfunction.
7. Repeat this procedure until the paper is not smeared with ink.

   Note:
   If you have a paper feed problem and if you have a cleaning sheet that came with Epson genuine paper, you may be able to solve the paper feed problem by using the cleaning sheet instead of using A4-size plain paper. When using the cleaning sheet, load the sheet in the printer following the instructions that came with the sheet. If a paper setup screen is displayed, press the button to continue. Repeat the procedure several times using the cleaning sheet.

Related Information

➡ "Loading Paper in the Rear Paper Feed" on page 36

Cleaning the Scanner Glass

When the copies or scanned images are smeared or scuffed, clean the scanner glass.

> ***Important:***
> *Never use alcohol or thinner to clean the printer. These chemicals can damage the printer.*

1. Open the document cover.

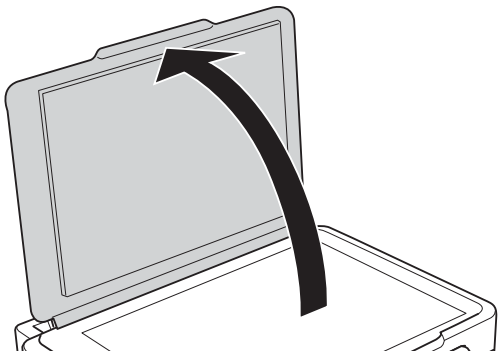

2. Use a soft, dry, clean cloth to clean the surface of the scanner glass.

   Note:
   - ❏ *If the glass surface is stained with grease or some other hard-to-remove material, use a small amount of glass cleaner and a soft cloth to remove it. Wipe off all remaining liquid.*
   - ❏ *Do not press the glass surface too hard.*
   - ❏ *Be careful not to scratch or damage the surface of the glass. A damaged glass surface can decrease the scan quality.*

Saving Power

The printer enters sleep mode or turns off automatically if no operations are performed for a set period. You can adjust the time before power management is applied. Any increase will affect the product's energy efficiency. Please consider the environment before making any change.

Saving Power - Control Panel

1. Enter **Setup** from the home screen using the ◀ or ▶ button, and then press the OK button.

2. Select **Printer Setup** using the ◀ or ▶ button, and then press the OK button.

3. Select **Power Off Timer** or **Sleep Timer** using the ◀ or ▶ button, and then press the OK button.

4. Select the setting using the ▲ or ▼ button, and then press the OK button.

Saving Power - Windows

1. Access the printer driver window.
2. Click **Printer and Option Information** on the **Maintenance** tab.
3. Select the time period before the printer enters sleep mode as the **Sleep Timer** setting, and click **Send**. To make the printer turn off automatically, select the time period as the **Power Off Timer** setting, and click **Send**.
4. Click **OK**.

Related Information

➡ "Windows Printer Driver" on page 107

Saving Power - Mac OS X

1. Select **System Preferences** from the menu > **Printers & Scanners** (or **Print & Scan**, **Print & Fax**), and then select the printer.
2. Click **Options & Supplies** > **Utility** > **Open Printer Utility**.
3. Click **Printer Settings**.
4. Select the time period before the printer enters sleep mode as the **Sleep Timer** setting, and click **Apply**. To make the printer turn off automatically, select the time period as the **Power Off Timer** setting, and click **Apply**.

Menu Options for Setup Mode

By selecting **Setup** on the home screen from the control panel, you can make printer settings or perform printer maintenance.

Menu Options for Ink Levels

Select the menus on the control panel as described below.

Setup > **Ink Levels**

Displays the approximate levels of the ink cartridges. When an ! icon is displayed, the ink cartridge is running low. When a X mark is displayed, the ink cartridge is expended.

Menu Options for Maintenance

Select the menus on the control panel as described below.

Setup > **Maintenance**

Nozzle Check

Prints a pattern to check if the print head nozzles are clogged.

Head Cleaning

Cleans clogged nozzles in the print head.

Head Alignment

Adjusts the print head to improve print quality.

Ink Cartridge Replacement

Use this feature to replace the ink cartridges before the ink is expended.

Paper Guide Cleaning

Cleans the roller inside the printer. Use this feature when your printouts are smeared or when paper is not fed correctly.

Related Information

➡ “Checking and Cleaning the Print Head” on page 94
➡ “Aligning the Print Head” on page 95
➡ “Replacing Ink Cartridges” on page 86
➡ “Cleaning the Paper Path” on page 97

Menu Options for Printer Setup

Select the menus on the control panel as described below.

Setup > **Printer Setup**

Paper Source Settings

❏ Paper Setup

Select the paper size and paper type you loaded in the paper source.

❏ Paper Setting Alert

Alerts you when the paper settings of a print job differ from the settings stored in the printer.

❏ Paper Configuration

Automatically displays the paper settings screen when paper is loaded. Disable this function if you always load the same size of paper and you do not want to make paper settings every time you load paper. AirPrint is not available when this is disabled. Also, the printer does not warn you even if the paper settings do not match the paper you loaded.

Quiet Mode

Reduces the noise the printer makes, however, this may reduce print speed. Depending on the paper type and print quality settings you selected, there may be no difference in the printer's noise level.

Power Off Timer

Automatically turns the printer off if no operations are performed for a period of time. You can adjust the time before power management is applied. Any increase will affect the product's energy efficiency. Please consider the environment before making any change.

Country/Region

Select the display country and region.

Language

Select the display language.

Sleep Timer

Select the time period before the printer enters sleep mode (energy saving mode) when no operations are performed. The LCD screen turns black when the set time passes.

Related Information

➡ "Saving Power" on page 98

Menu Options for Network Settings

Select the menus on the control panel as described below.

Setup > **Network Settings**

Print Status Sheet

Prints a network status sheet.

Wi-Fi Setup

- ❏ Wi-Fi Setup Wizard

  Select a SSID, enter a password, and then connect the printer to a wireless (Wi-Fi) network.

- ❏ Push Button (WPS)

  Connects the printer to a wireless (Wi-Fi) network by pressing a WPS push button on a wireless router.

- ❏ PIN Code (WPS)

  In the wireless router utility, enter the PIN code displayed on the printer's screen to connect the printer to a wireless (Wi-Fi) network.

- ❏ Wi-Fi Auto Connect

  Connects the printer to a wireless (Wi-Fi) network using a computer that is connected to the access point. Insert the software disc supplied with the printer into the computer, and then follow the on-screen instructions. When you are prompted to operate the printer, run this menu.

- ❏ Disable Wi-Fi

  Disables the connection by turning off the wireless signal without deleting the network information. To enable the connection, set up the wireless (Wi-Fi) network again.

- ❏ Wi-Fi Direct Setup

  Connects the printer to a wireless (Wi-Fi) network without a wireless router.

Connection Check

Checks the status of the network connection and prints the network connection report. If there are any problems with the connection, see the check report to solve the problem.

Related Information

➡ "Printing a Network Status Sheet" on page 30
➡ "Making Wi-Fi Settings from the Control Panel" on page 22
➡ "Printing a Network Connection Report" on page 26

Menu Options for Epson Connect Services

Select the menus on the control panel as described below.

Setup > **Epson Connect Services**

Status

Check whether or not the printer is registered and connected to the Epson Connect services.

Email Address

Check the printer's email address that is registered to the Epson Connect services.

Register/Delete

Register or delete the printer to or from the Epson Connect services.

Suspend/Resume

Select whether to suspend or resume Epson Connect services.

For registration and usage guides, see the following portal website.

https://www.epsonconnect.com/

http://www.epsonconnect.eu (Europe only)

Related Information

➡ "Epson Connect Service" on page 105

Menu Options for Google Cloud Print Services

Select the menus on the control panel as described below.

Setup > **Google Cloud Print Services**

Status

Check whether or not the printer is registered and connected to the Google Cloud Print services.

Suspend/Resume

Select whether to suspend or resume the Google Cloud Print services.

Unregister

Unregister the Google Cloud Print services.

For registration and usage guides, see the following portal website.

https://www.epsonconnect.com/

http://www.epsonconnect.eu (Europe only)

Menu Options for File Sharing

Select the menus on the control panel as described below.

Setup > **File Sharing**

Select the connection method between the printer and a computer that will have write access to the memory card inserted in the printer. Read and write access is given to the computer with the priority connection. Only read access is given to other computers.

Related Information

➡ "Accessing a Memory Card From a Computer" on page 154

Menu Options for Firmware Update

Select the menus on the control panel as described below.

Setup > **Firmware Update**

Update

Checks if the latest version of the firmware has been uploaded to the network server. If an update is available, you can select whether or not to start updating.

Current Version

Displays the current firmware version of your printer.

Notification

Checks for firmware updates periodically and notifies you if an update is available.

Related Information

➡ "Updating Applications and Firmware" on page 118

Menu Options for Restore Default Settings

Select the menus on the control panel as described below.

Setup > **Restore Default Settings**

Network Settings

Resets the network settings to their defaults.

All except Network

Resets all settings except for network settings to their defaults.

All Settings

Resets all settings to their defaults.

Network Service and Software Information

This section introduces the network services and software products available for your printer from the Epson website or the supplied CD.

Epson Connect Service

By using Epson Connect service available on the Internet, you can print from your smartphone, tablet PC, or laptop, anytime and practically anywhere.

The features available on the Internet are as follows.

Email Print	Epson iPrint remote print	Scan to Cloud	Remote Print Driver
✓	✓	–	✓

See the Epson Connect portal website for details.

https://www.epsonconnect.com/

http://www.epsonconnect.eu (Europe only)

Web Config

Web Config is an application that runs in a web browser, such as Internet Explorer and Safari, on a computer or smart device. You can confirm the printer status or change the network service and printer settings. To use the Web Config, connect the printer and the computer or device to the same network.

Note:
The following browsers are supported.

OS	Browser
Windows XP or later	Internet Explorer 8 or later, Firefox*, Chrome*
Mac OS X v10.6.8 or later	Safari*, Firefox*, Chrome*
iOS*	Safari*
Android 2.3 or later	Default browser
Chrome OS*	Default browser

* Use the latest version.

Running Web Config on a Web Browser

1. Check the printer's IP address.

   Select **Setup** > **Network Settings** > **Print Status Sheet** from the control panel, and then press the ⊡ button or the OK button. Check the printer's IP address on the printed status sheet.

2. Launch a Web browser from a computer or smart device, and then enter the printer's IP address.

   Format:

   IPv4: http://the printer's IP address/

   IPv6: http://[the printer's IP address]/

   Examples:

   IPv4: http://192.168.100.201/

   IPv6: http://[2001:db8::1000:1]/

   Note:
   Using the smart device, you can also run Web Config from the maintenance screen of Epson iPrint.

Related Information

➡ "Printing Using Epson iPrint" on page 65

Running Web Config on Windows

When connecting a computer to the printer using WSD, follow the steps below to run Web Config.

1. Access the devices and printers screen in Windows.

   ❏ Windows 10

   Right-click the start button or press and hold it, and then select **Control Panel** > **View devices and printers** in **Hardware and Sound**.

   ❏ Windows 8.1/Windows 8

   Select **Desktop** > **Settings** > **Control Panel** > **View devices and printers** in **Hardware and Sound** (or **Hardware**).

   ❏ Windows 7

   Click the start button, and select **Control Panel** > **View devices and printers** in **Hardware and Sound**.

   ❏ Windows Vista

   Click the start button, and select **Control Panel** > **Printers** in **Hardware and Sound**.

2. Right-click on your printer and select **Properties**.

3. Select the **Web Service** tab and click the URL.

Running Web Config on Mac OS X

1. Select **System Preferences** from the menu > **Printers & Scanners** (or **Print & Scan**, **Print & Fax**), and then select the printer.

2. Click **Options & Supplies**> **Show Printer Webpage**.

Windows Printer Driver

The printer driver controls the printer according to the commands from an application. Making settings on the printer driver provides the best printing results. You can also check the status of the printer or keep it in top operating condition using the printer driver utility.

Note:
You can change the language of the printer driver. Select the language you want to use from the ***Language*** *setting on the* ***Maintenance*** *tab.*

Accessing the printer driver from applications

To make settings that apply only to the application you are using, access from that application.

Select **Print** or **Print Setup** from the **File** menu. Select your printer, and then click **Preferences** or **Properties**.

Note:
Operations differ depending on the application. See the application's help for details.

Accessing the printer driver from the control panel

To make settings that apply to all of the applications, access from the control panel.

❏ Windows 10

Right-click the start button or press and hold it, and then select **Control Panel** > **View devices and printers** in **Hardware and Sound**. Right-click on your printer, or press and hold it and then select **Printing preferences**.

❏ Windows 8.1/Windows 8

Select **Desktop** > **Settings** > **Control Panel** > **View devices and printers** in **Hardware and Sound**. Right-click on your printer, or press and hold it and then select **Printing preferences**.

❏ Windows 7

Click the start button, and select **Control Panel** > **View devices and printers** in **Hardware and Sound**. Right-click on your printer and select **Printing preferences**.

❏ Windows Vista

Click the start button, and select **Control Panel** > **Printers** in **Hardware and Sound**. Right-click on your printer and select **Select printing preferences**.

❏ Windows XP

Click the start button, and select **Control Panel** > **Printers and Other Hardware** > **Printers and Faxes**. Right-click on your printer and select **Printing preferences**.

Accessing the printer driver from the printer icon on the task bar

The printer icon on the desktop task bar is a shortcut icon allowing you to quickly access the printer driver.

If you click the printer icon and select **Printer Settings**, you can access the same printer settings window as the one displayed from the control panel. If you double-click this icon, you can check the status of the printer.

Note:
If the printer icon is not displayed on the task bar, access the printer driver window, click ***Monitoring Preferences*** *on the* ***Maintenance*** *tab, and then select* ***Register the shortcut icon to the taskbar****.*

Starting the utility

Access the printer driver window. Click the **Maintenance** tab.

Guide to Windows Printer Driver

Help is available in the printer driver for Windows. To view explanations of the setting items, right-click on each item, and then click **Help**.

Main Tab

You can make basic settings for printing, such as paper type or paper size.

You can also make settings for printing both sides of the paper or printing multiple pages on one sheet.

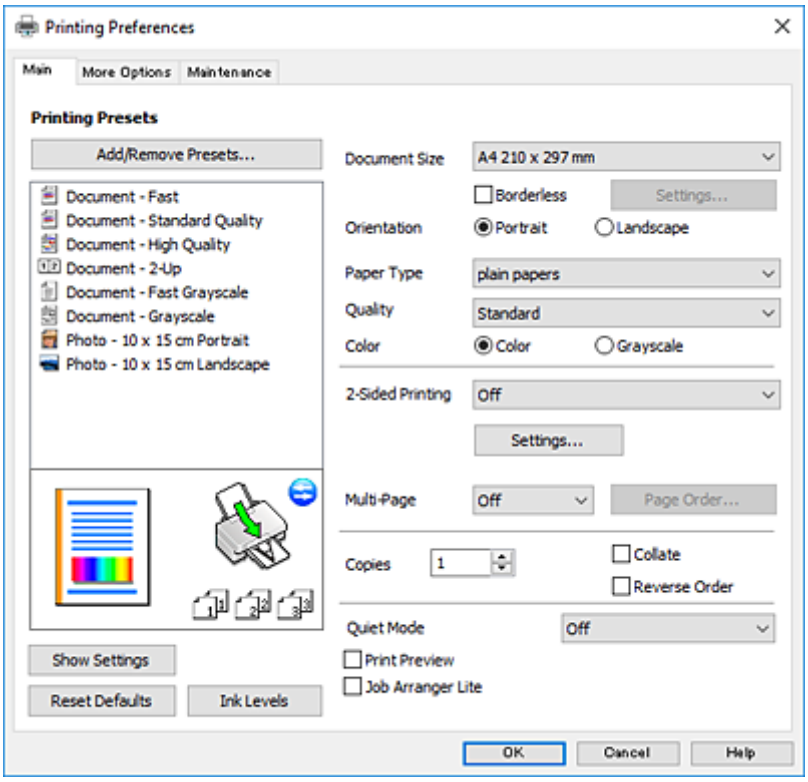

More Options Tab

You can select additional layout and printing options such as changing the size of a printout or making color corrections.

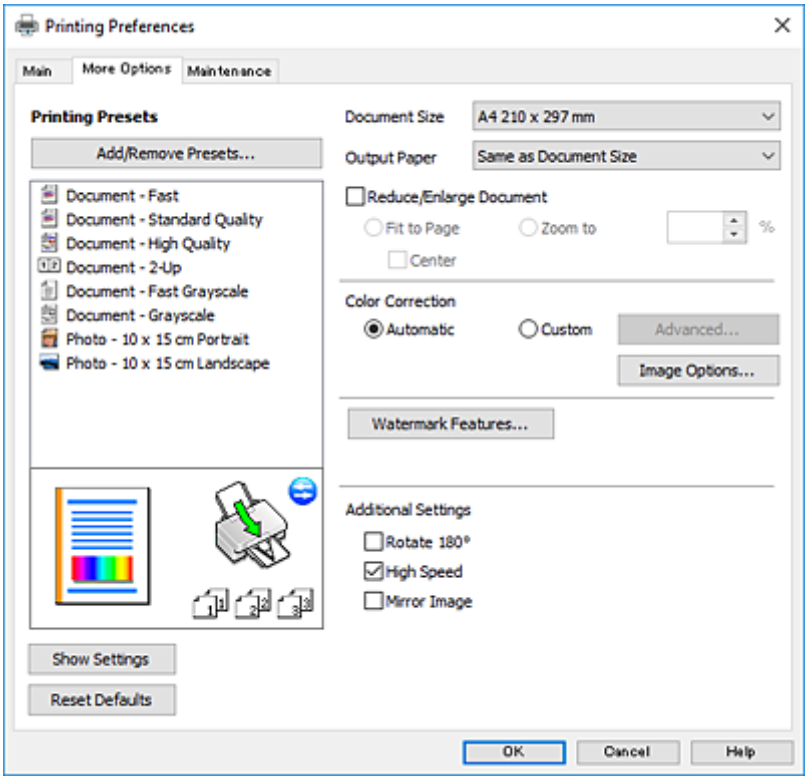

Maintenance Tab

You can run maintenance features such as nozzle check and print head cleaning, and by starting **EPSON Status Monitor 3**, you can check printer status and error information.

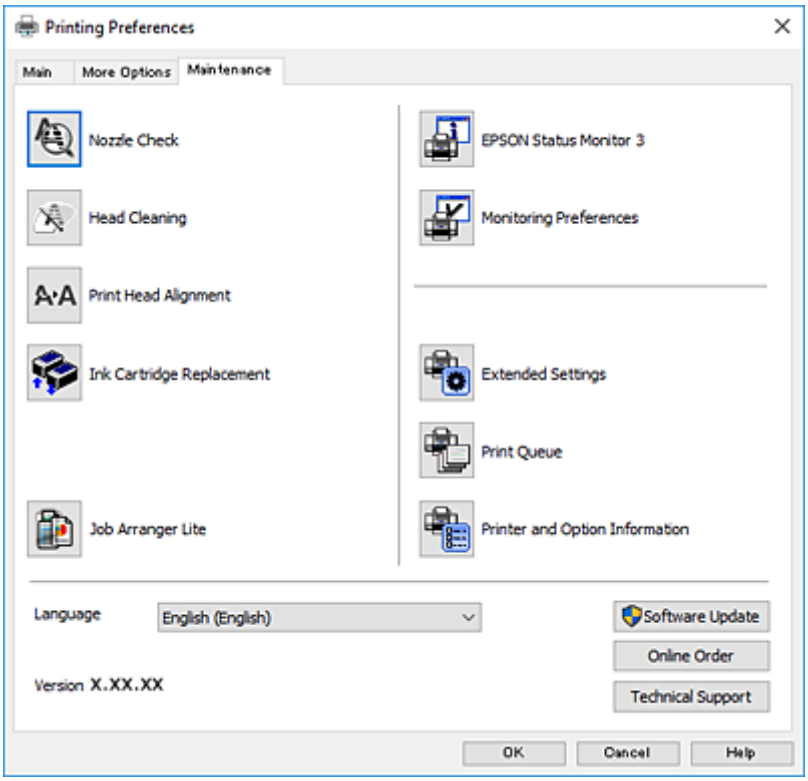

Making Operation Settings for the Windows Printer Driver

You can make settings such as enabling **EPSON Status Monitor 3**.

1. Access the printer driver window.
2. Click **Extended Settings** on the **Maintenance** tab.
3. Make the appropriate settings, and then click **OK**.

   See the online help for explanations of the setting items.

Related Information

➡ "Windows Printer Driver" on page 107

Mac OS X Printer Driver

The printer driver controls the printer according to the commands from an application. Making settings on the printer driver provides the best printing results. You can also check the status of the printer or keep it in top operating condition using the printer driver utility.

Accessing the printer driver from applications

Click **Page Setup** or **Print** on the **File** menu of your application. If necessary, click **Show Details** (or ▼) to expand the print window.

Note:
*Depending on the application being used, **Page Setup** may not be displayed in the **File** menu, and the operations for displaying the print screen may differ. See the application's help for details.*

Starting the utility

Select **System Preferences** from the menu > **Printers & Scanners** (or **Print & Scan**, **Print & Fax**), and then select the printer. Click **Options & Supplies** > **Utility** > **Open Printer Utility**.

Guide to Mac OS X Printer Driver

Print dialog

Switch the pop-up menu on the center of the screen to show more items.

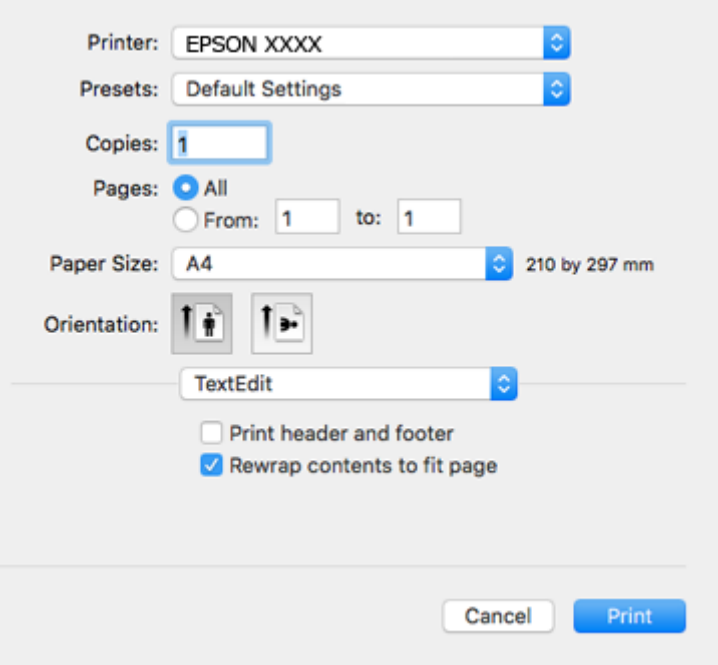

Pop-up Menu	Descriptions
Print Settings	You can make the basic print settings such as paper type and print quality.
Layout	You can select a layout for printing several pages on one sheet or select to print a border.
Paper Handling	You can reduce or enlarge the size of the print job to automatically fit the paper size you loaded.
Color Matching	You can adjust the colors.
Color Options	When you select **EPSON Color Controls** from the **Color Matching** menu, you can select a color correction method.

Note:
On Mac OS X v10.8.x or later, if ***Print Settings*** *menu is not displayed, Epson printer driver has not been installed correctly.*

Select ***System Preferences*** *from the* *menu >* ***Printers & Scanners*** *(or* ***Print & Scan****,* ***Print & Fax****), remove the printer, and then add the printer again. See the following to add a printer.*

http://epson.sn

Epson Printer Utility

You can run a maintenance feature such as nozzle check and print head cleaning, and by starting **EPSON Status Monitor**, you can check printer status and error information.

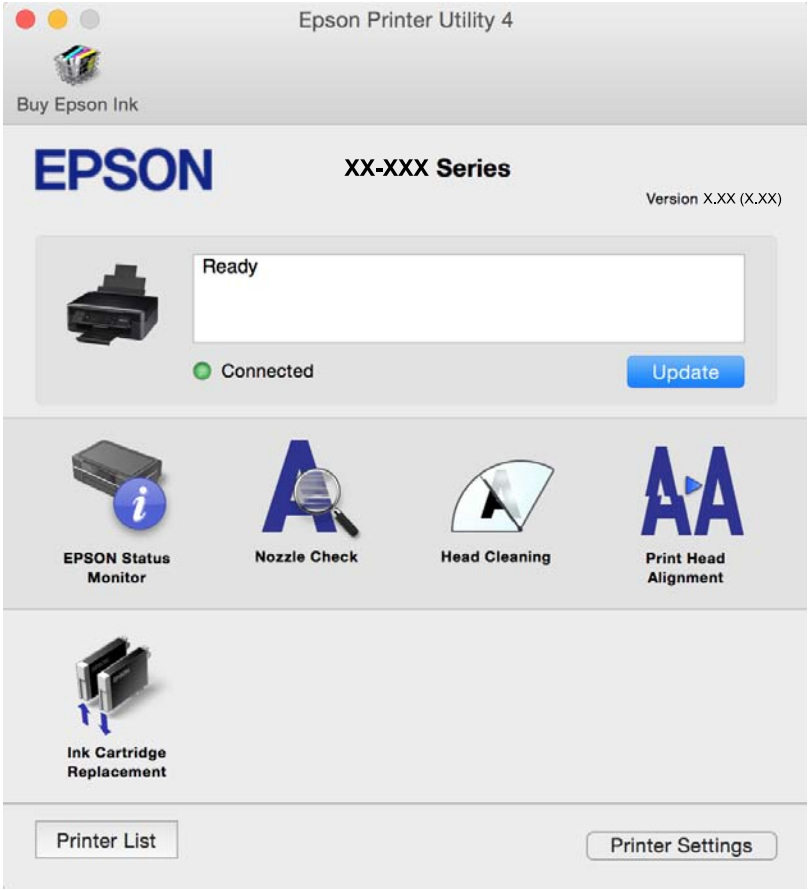

Making Operation Settings for the Mac OS X Printer Driver

Accessing the Operation Settings Window of the Mac OS X Printer Driver

Select **System Preferences** from the menu > **Printers & Scanners** (or **Print & Scan**, **Print & Fax**), and then select the printer. Click **Options & Supplies** > **Options** (or **Driver**).

Operation Settings of the Mac OS X Printer Driver

❏ Skip Blank Page: Avoids printing blank pages.

- Quiet Mode: Reduces the noise the printer makes, however, this may reduce print speed. Depending on the paper type and print quality settings you selected, there may be no difference in the printer's noise level.
- Permit temporary black printing: Prints only with black ink temporarily.
- High Speed Printing: Prints when the print head moves in both directions. The print speed is faster, but the quality may decline.
- Warning Notifications: Allows the printer driver to display warning notifications.
- Establish bidirectional communication: Usually, this should be set to **On**. Select **Off** when acquiring the printer information is impossible because the printer is shared with Windows computers on a network or for any other reason.

Related Information

➡ "Temporarily Printing with Black Ink - Mac OS X" on page 92

Epson Scan 2 (Scanner Driver)

Epson Scan 2 is an application for controlling scanning. You can adjust the size, resolution, brightness, contrast, and quality of the scanned image.

Note:
You can also start Epson Scan 2 from a TWAIN-compliant scanning application.

Starting on Windows

- Windows 10

  Click the start button, and then select **All apps** > **EPSON** > **Epson Scan 2**.
- Windows 8.1/Windows 8

  Enter the application name in the search charm, and then select the displayed icon.
- Windows 7/Windows Vista/Windows XP

  Click the start button, and then select **All Programs** or **Programs** > **EPSON** > **Epson Scan 2**> **Epson Scan 2**.

Starting on Mac OS X

Note:
Epson Scan 2 does not support the Mac OS X fast user switching feature. Turn off fast user switching.

Select **Go** > **Applications** > **Epson Software** > **Epson Scan 2**.

Related Information

➡ "Installing Applications" on page 117

Epson Event Manager

Epson Event Manager is an application that allows you to manage scanning from the control panel and save images to a computer. You can add your own settings as presets, such as the document type, the save folder location, and the image format. See the application's help for details.

Starting on Windows

❏ Windows 10

Click the start button, and then select **All apps** > **Epson Software** > **Event Manager**.

❏ Windows 8.1/Windows 8

Enter the application name in the search charm, and then select the displayed icon.

❏ Windows 7/Windows Vista/Windows XP

Click the start button, and then select **All Programs** or **Programs** > **Epson Software** > **Event Manager**.

Starting on Mac OS X

Select **Go** > **Applications** > **Epson Software** > **Event Manager**.

Related Information

➡ "Scanning to a Computer" on page 72

➡ "Installing Applications" on page 117

Epson Easy Photo Print

Epson Easy Photo Print is an application that allows you to easily print photos with various layouts. You can preview the photo image and adjust the images or position. You can also print photos with a frame. See the application's help for details.

Note:
To use this application, the printer driver needs to be installed.

Starting on Windows

❏ Windows 10

Click the start button, and then select **All apps** > **Epson Software** > **Epson Easy Photo Print**.

❏ Windows 8.1/Windows 8

Enter the application name in the search charm, and then select the displayed icon.

❏ Windows 7/Windows Vista/Windows XP

Click the start button, and then select **All Programs** or **Programs** > **Epson Software** > **Epson Easy Photo Print**.

Starting on Mac OS X

Select **Go** > **Applications** > **Epson Software** > **Epson Easy Photo Print**.

Related Information

➡ "Installing Applications" on page 117

E-Web Print (for Windows Only)

E-Web Print is an application that allows you to easily print web pages with various layouts. See the application's help for details. You can access the help from the **E-Web Print** menu on the **E-Web Print** tool bar.

Note:
Check for supported browsers and the latest version from the download site.

Starting

When you install E-Web Print, it is displayed in your browser. Click **Print** or **Clip**.

Related Information

➡ "Installing Applications" on page 117

Easy Photo Scan

Easy Photo Scan is an application that allows you to scan photos and easily send the scanned image to a computer or cloud service. You can also easily adjust the scanned image. See the application's help for details.

Note:
To use this application, the scanner driver Epson Scan 2 needs to be installed.

Starting on Windows

❏ Windows 10

Click the start button, and then select **All apps** > **Epson Software** > **Easy Photo Scan**.

❏ Windows 8.1/Windows 8

Enter the application name in the search charm, and then select the displayed icon.

❏ Windows 7/Windows Vista/Windows XP

Click the start button, and then select **All Programs** or **Programs** > **Epson Software** > **Easy Photo Scan**.

Starting on Mac OS X

Select **Go** > **Applications** > **Epson Software** > **Easy Photo Scan**.

Related Information

➡ "Installing Applications" on page 117

EPSON Software Updater

EPSON Software Updater is an application that checks for new or updated software on the internet and installs it. You can also update the printer's firmware and manual.

Starting on Windows

❏ Windows 10

Click the start button, and then select **All apps** > **Epson Software** > **EPSON Software Updater**.

❏ Windows 8.1/Windows 8

Enter the application name in the search charm, and then select the displayed icon.

❏ Windows 7/Windows Vista/Windows XP

Click the start button, and then select **All Programs** (or **Programs**) > **Epson Software** > **EPSON Software Updater**.

Note:
You can also start EPSON Software Updater by clicking the printer icon on the task bar on the desktop, and then selecting ***Software Update****.*

Starting on Mac OS X

Select **Go** > **Applications** > **Epson Software** > **EPSON Software Updater**.

Related Information

➡ "Installing Applications" on page 117

Uninstalling Applications

Note:
Log on to your computer as an administrator. Enter the administrator password if the computer prompts you.

Uninstalling Applications - Windows

1. Press the ⏻ button to turn off the printer.

2. Quit all running applications.

3. Open **Control Panel**:

   ❏ Windows 10

   Right-click the start button or press and hold it, and then select **Control Panel**.

   ❏ Windows 8.1/Windows 8

   Select **Desktop** > **Settings** > **Control Panel**.

   ❏ Windows 7/Windows Vista/Windows XP

   Click the start button and select **Control Panel**.

4. Open **Uninstall a program** (or **Add or Remove Programs**):

   ❏ Windows 10/Windows 8.1/Windows 8/Windows 7/Windows Vista

   Select **Uninstall a program** in **Programs**.

   ❏ Windows XP

   Click **Add or Remove Programs**.

5. Select the application you want to uninstall.

6. Uninstall the applications:

   ❏ Windows 10/Windows 8.1/Windows 8/Windows 7/Windows Vista

   Click **Uninstall/Change** or **Uninstall**.

   ❏ Windows XP

   Click **Change/Remove** or **Remove**.

   Note:
   *If the **User Account Control** window is displayed, click **Continue**.*

7. Follow the on-screen instructions.

Uninstalling Applications - Mac OS X

1. Download the Uninstaller using EPSON Software Updater.

   Once you have downloaded the Uninstaller, you do not need to download it again each time you uninstall the application.

2. Press the ⏻ button to turn off the printer.

3. To uninstall the printer driver, select **System Preferences** from the menu > **Printers & Scanners** (or **Print & Scan**, **Print & Fax**), and then remove the printer from the enabled printers list.

4. Quit all running applications.

5. Select **Go** > **Applications** > **Epson Software** > **Uninstaller**.

6. Select the application you want to uninstall, and then click **Uninstall**.

   Important:
   The Uninstaller removes all drivers for Epson inkjet printers on the computer. If you use multiple Epson inkjet printers and you only want to delete some drivers, delete all of them first, and then install the necessary printer driver again.

   Note:
   *If you cannot find the application you want to uninstall in the application list, you cannot uninstall using the Uninstaller. In this situation, select **Go** > **Applications** > **Epson Software**, select the application you want to uninstall, and then drag it to the trash icon.*

Related Information

➡ "Installing Applications" on page 117

Installing Applications

Connect your computer to the network and install the latest version of applications from the website.

Note:
- *Log on to your computer as an administrator. Enter the administrator password if the computer prompts you.*
- *When reinstalling an application, you need to uninstall it first.*

1. Quit all running applications.
2. When installing the printer driver or Epson Scan 2, disconnect the printer and the computer temporarily.

   Note:
   Do not connect the printer and the computer until you are instructed to do so.

3. Access to the following website, and then enter the product name.

   http://epson.sn

4. Go to **Setup** and then click **Download**. Click or double-click the downloaded file to run the installer. Follow the on-screen instructions.

Note:
If you are using a Windows computer and you cannot download applications from the website, install them from the software disc that came with the printer.

Related Information

➡ "Uninstalling Applications" on page 116

Updating Applications and Firmware

You may be able to clear certain problems and improve or add functions by updating the applications and the firmware. Make sure you use the latest version of the applications and firmware.

1. Make sure that the printer and the computer are connected, and the computer is connected to the internet.
2. Start EPSON Software Updater, and update the applications or the firmware.

   Important:
   Do not turn off the computer or the printer while updating.

   Note:
   If you cannot find the application you want to update in the list, you cannot update using the EPSON Software Updater. Check for the latest versions of the applications from your local Epson website.

   http://www.epson.com

Related Information

➡ "EPSON Software Updater" on page 115

Updating the Printer's Firmware using the Control Panel

If the printer is connected to the Internet, you can update the printer's firmware using the control panel. By updating the firmware, the printer's performance may improve, or new functions may be added. You can also set the printer to regularly check for firmware updates and notify you if any are available.

1. Enter **Setup** from the home screen using the ◀ or ▶ button, and then press the OK button.

2. Select **Firmware Update** using the ◀ or ▶ button, and then press the OK button.

3. Select **Update** using the ◀ or ▶ button, and then press the OK button.

   Note:
   *Select **Notification** > **On** to set the printer to regularly check for available firmware updates.*

4. Check the message displayed on the screen and press the OK button.

   The printer starts searching for available updates.

5. If a message is displayed on the LCD screen informing you that a firmware update is available, follow the on-screen instructions to start the update.

   Important:
   - *Do not turn off or unplug the printer until the update is complete; otherwise, the printer may malfunction.*
   - *If the firmware update is not completed or is unsuccessful, the printer does not start up normally and "Recovery Mode" is displayed on the LCD screen the next time the printer is turned on. In this situation, you need to update the firmware again using a computer. Connect the printer to the computer with a USB cable. While "Recovery Mode" is displayed on the printer, you cannot update the firmware over a network connection. On the computer, access your local Epson website, and then download the latest printer firmware. See the instructions on the website for the next steps.*

Solving Problems

Checking the Printer Status

Checking Error Codes on the LCD Screen

A code is displayed on the LCD screen if there is an error or information that requires your attention.

Code	Situation	Solutions
E-01	A printer error has occurred.	Open the scanner unit and remove any paper or protective material inside the printer. Turn the power off and on again.
E-02	A scanner error has occurred.	Turn the power off and on again.
E-11	An ink pad needs to be replaced.	Contact Epson or an authorised Epson service provider to replace the ink pad*. It is not a user-serviceable part.
W-01	A paper jam has occurred.	Remove the paper from the printer and press the button displayed on the bottom of the LCD screen to clear the error. In some case, you need to turn the power off and on again.
W-11	An ink pad is nearing the end of its service life.	Contact Epson or an authorised Epson service provider to replace the ink pad*. It is not a user-serviceable part. The message will be displayed until the ink pad is replaced. Press the ◇ button to resume printing.
W-12	Ink cartridges are installed incorrectly.	Press the ink cartridge down firmly.
W-13	The ink cartridge displayed on the LCD screen has not been recognized.	Replace the ink cartridge. Epson recommends the use of genuine Epson ink cartridges.
I-22	Set Wi-Fi from the **Push Button (WPS)**.	Push the access point button. If there is no button on the access point, open the access point setting window, and then click the button displayed in the software.
I-23	Set Wi-Fi from the **PIN Code (WPS)**.	Enter the PIN code displayed on the LCD screen into the access point or computer within two minutes.
I-31	Set Wi-Fi from the **Wi-Fi Auto Connect**.	Install the software on your computer, and then press the OK button when Wi-Fi setup starts.
I-41	**Paper Configuration** is disabled. Some functions cannot be used.	If **Paper Configuration** is disabled, you cannot use AirPrint. To use the feature, enable **Paper Configuration**.
I-60	Your computer may not support WSD (Web Services for Devices).	The scan to computer (WSD) feature is only available for computers running English versions of Windows 10, Windows 8.1, Windows 8, Windows 7 or Windows Vista. Make sure that the printer is correctly connected to the computer.
I-71	-	Place the originals on the scanner glass to copy in **A4, 2-up Copy** or **A4, Book/2-up** layout.

Code	Situation	Solutions
Recovery Mode	The printer has started in recovery mode because the firmware update failed.	Follow the steps below to try to update the firmware again. 1. Connect the computer and the printer with a USB cable. (During recovery mode, you cannot update the firmware over a network connection.) 2. Visit your local Epson website for further instructions.

* In some print cycles a very small amount of surplus ink may be collected in the ink pad. To prevent ink leakage from the pad, the printer is designed to stop printing when the pad has reached its limit. Whether and how often this is required will vary according to the number of pages you print, the type of material that you print and the number of cleaning cycles that the printer performs. The need for replacement of the pad does not mean that your printer has ceased to operate in accordance with its specifications. The printer will advise you when the pad requires replacing and this can only be performed by an authorised Epson Service provider. The Epson warranty does not cover the cost of this replacement.

Related Information

➡ "Contacting Epson Support" on page 155
➡ "Removing Jammed Paper" on page 122
➡ "Installing Applications" on page 117
➡ "Menu Options for Printer Setup" on page 101
➡ "Setting Up a WSD Port" on page 73
➡ "Placing Originals for 2-Up Layout" on page 41
➡ "Placing a Double-Page Spread for 2-Up Layout" on page 41
➡ "Updating Applications and Firmware" on page 118

Checking the Printer Status - Windows

1. Access the printer driver window.
2. Click **EPSON Status Monitor 3** on the **Maintenance** tab.

   Note:
   - ❏ *You can also check the printer status by double-clicking the printer icon on the taskbar. If the printer icon is not added to the taskbar, click **Monitoring Preferences** on the **Maintenance** tab, and then select **Register the shortcut icon to the taskbar**.*
   - ❏ *If **EPSON Status Monitor 3** is disabled, click **Extended Settings** on the **Maintenance** tab, and then select **Enable EPSON Status Monitor 3**.*

Related Information

➡ "Windows Printer Driver" on page 107

Checking Printer Status - Mac OS X

1. Select **System Preferences** from the menu > **Printers & Scanners** (or **Print & Scan**, **Print & Fax**), and then select the printer.

2. Click **Options & Supplies** > **Utility** > **Open Printer Utility**.

3. Click **EPSON Status Monitor**.

Removing Jammed Paper

Check the error displayed on the control panel and follow the instructions to remove the jammed paper including any torn pieces. Next, clear the error.

> ***Important:***
> *Remove the jammed paper carefully. Removing the paper vigorously may cause damage to the printer.*

Removing Jammed Paper from the Rear Paper Feed

Remove the jammed paper.

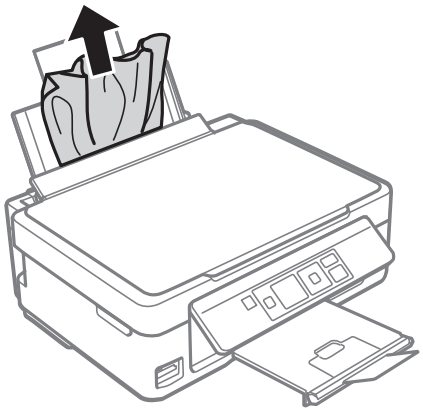

Removing Jammed Paper from the Output Tray

Remove the jammed paper.

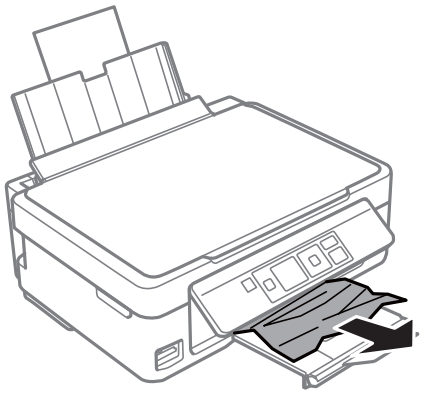

Removing Jammed Paper from Inside the Printer

Caution:

- *Be careful not to trap your hand or fingers when opening or closing the scanner unit. Otherwise you may be injured.*
- *Never touch the buttons on the control panel while your hand is inside the printer. If the printer starts operating, it could cause an injury. Be careful not to touch the protruding parts to avoid injury.*

1. Open the scanner unit with the document cover closed.

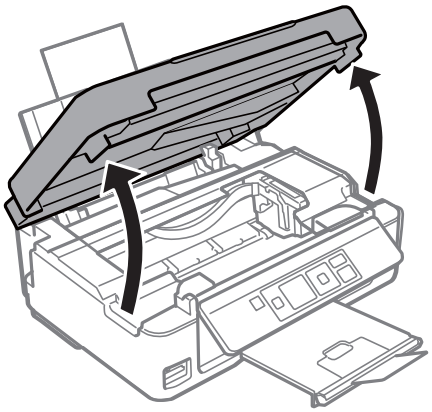

2. Remove the jammed paper.

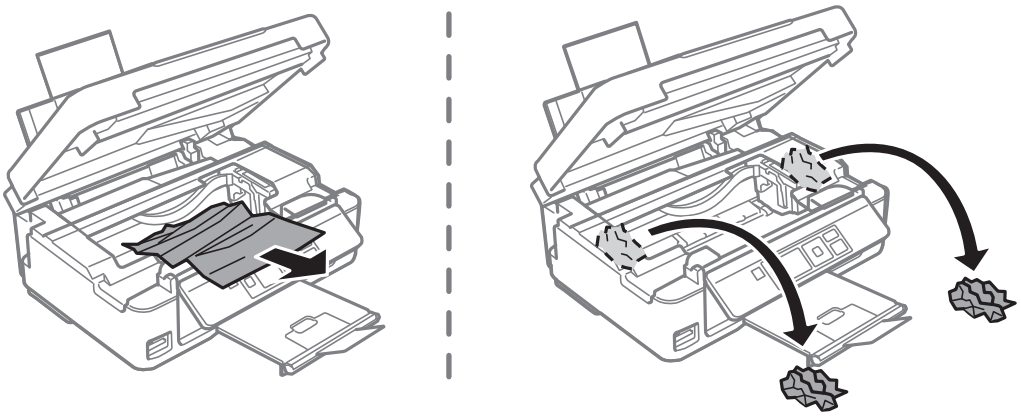

Important:

Do not touch the white flat cable or translucent part inside the printer. Doing so may cause a malfunction.

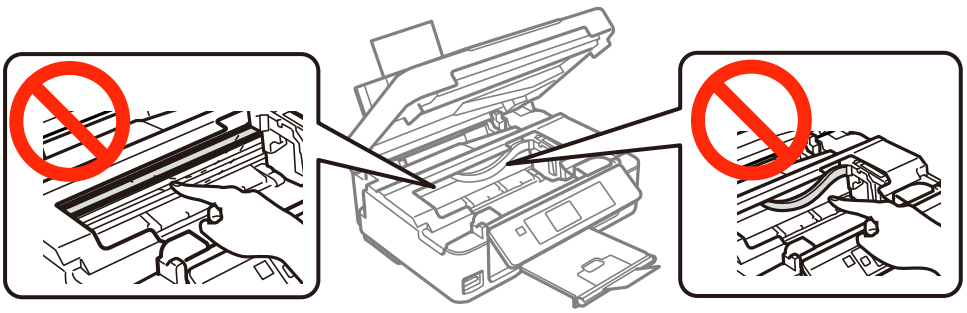

3. Close the scanner unit.

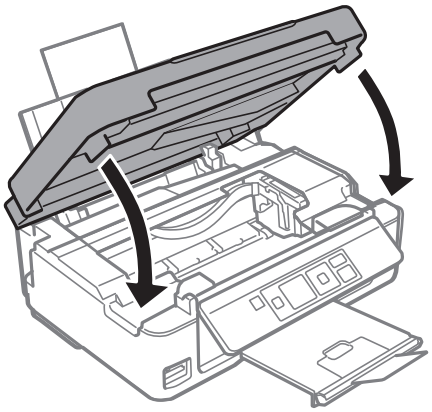

Paper Does Not Feed Correctly

Check the following points, and then take the appropriate actions to solve the problem.

❏ Place the printer on a flat surface and operate in the recommended environmental conditions.

❏ Use paper supported by this printer.

❏ Follow the paper handling precautions.

❏ Make sure the paper size and paper type settings match the actual paper size and paper type loaded in the printer.

Related Information

➡ "Environmental Specifications" on page 150

➡ "Paper Handling Precautions" on page 34

➡ "Available Paper and Capacities" on page 35

➡ "List of Paper Types" on page 36

Paper Jams

❏ Load paper in the correct direction, and slide the edge guides against the edges of the paper.

❏ Load one sheet of paper at a time if you have loaded several sheets of paper.

Related Information

➡ "Removing Jammed Paper" on page 122

➡ "Loading Paper in the Rear Paper Feed" on page 36

Paper Feeds at a Slant

Load paper in the correct direction, and slide the edge guides against the edges of the paper.

Related Information

➡ "Loading Paper in the Rear Paper Feed" on page 36

Several Sheets of Paper are Fed at a Time

❏ Load one sheet of paper at a time.

❏ When several sheets of paper are fed at a time during manual 2-sided printing, remove any paper which is loaded in the printer before you reload the paper.

No Paper Feeds

❏ Do not load more than the maximum number of sheets specified for the paper. For plain paper, do not load above the line indicated by the triangle symbol on the edge guide.

❏ If you have the cleaning sheet that came with Epson genuine paper, use it to clean the roller inside the printer.

Related Information

➡ "Available Paper and Capacities" on page 35

➡ "Cleaning the Paper Path" on page 97

Paper Out Error Occurs

When a paper out error occurs although paper is loaded in the rear paper feed, reload paper against the right edge of the rear paper feed.

Power and Control Panel Problems

Power Does Not Turn On

❏ Make sure the power cord is securely plugged in.

❏ Hold down the ⏻ button for a little longer.

Power Does Not Turn Off

Hold down the ⏻ button for a little longer. If you still cannot turn off the printer, unplug the power cord. To prevent the print head from drying out, turn the printer back on and turn it off by pressing the ⏻ button.

LCD Screen Gets Dark

The printer is in sleep mode. Press any button on the control panel to return the LCD screen to its former state.

Cannot Print from a Computer

- ❏ Install the printer driver.
- ❏ Connect the USB cable securely to the printer and the computer.
- ❏ If you are using a USB hub, try to connect the printer directly to the computer.
- ❏ If you cannot print over a network, see the page that describes the network connection method from the computer.
- ❏ If you are printing a large data size image, the computer may run out of memory. Print the image at a lower resolution or a smaller size.
- ❏ In Windows, click **Print Queue** on the printer driver's **Maintenance** tab, and then check the following.
  - ❏ Check if there are any paused print jobs.

    Cancel printing if necessary.
  - ❏ Make sure the printer is not offline or pending.

    If the printer is offline or pending, clear the offline or pending setting from the **Printer** menu.
  - ❏ Make sure the printer is selected as the default printer from the **Printer** menu (there should be a check mark on the menu item).

    If the printer is not selected as the default printer, set it as the default printer.
  - ❏ Make sure the printer port is selected correctly in **Property** > **Port** from the **Printer** menu as follows.

    Select "**USBXXX**" for a USB connection, or "**EpsonNet Print Port**" for a network connection.
- ❏ In Mac OS X, make sure the printer status is not **Pause**.

  Select **System Preferences** from the menu > **Printers & Scanners** (or **Print & Scan**, **Print & Fax**), and then double-click the printer. If the printer is paused, click **Resume** (or **Resume Printer**).

Related Information

➡ "Installing Applications" on page 117

➡ "Connecting to a Computer" on page 20

➡ "Canceling Printing" on page 67

When You Cannot Make Network Settings

- ❏ Turn off the devices you want to connect to the network. Wait for about 10 seconds, and then turn on the devices in the following order; access point, computer or smart device, and then printer. Move the printer and computer or smart device closer to the access point to help with radio wave communication, and then try to make network settings again.
- ❏ Select **Setup** > **Network Settings** > **Connection Check**, and then print the network connection report. If an error has occurred, check the network connection report and then follow the printed solutions.

Related Information

➡ "Cannot Connect from Devices Even Though Network Settings are No Problem" on page 127

➡ "Messages and Solutions on the Network Connection Report" on page 27

Cannot Connect from Devices Even Though Network Settings are No Problem

If you cannot connect from the computer or smart device to the printer even though the network connection report does not show any problems, see the following.

❏ When you are using multiple access points at the same time, you may not be able to use the printer from the computer or smart device depending on the settings of the access points. Connect the computer or smart device to the same access point as the printer.

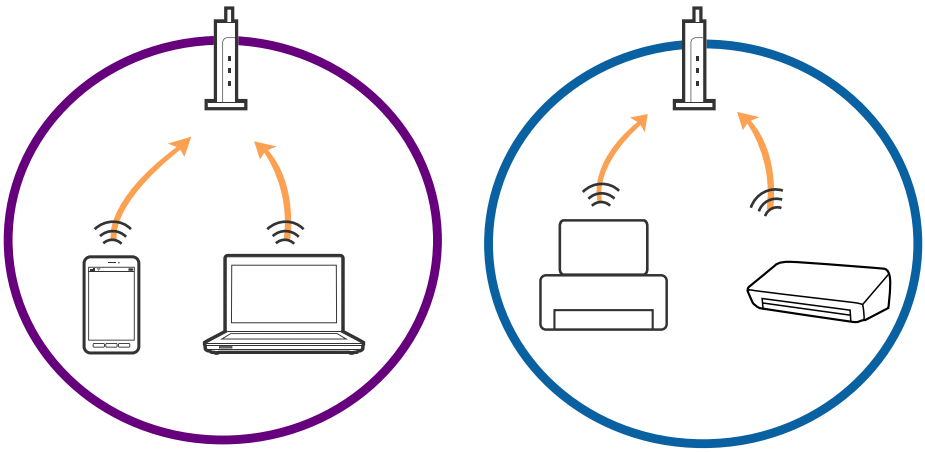

❏ You may not be able to connect to the access point when the access point has multiple SSIDs and devices are connected to different SSIDs on the same access point. Connect the computer or smart device to the same SSID as the printer.

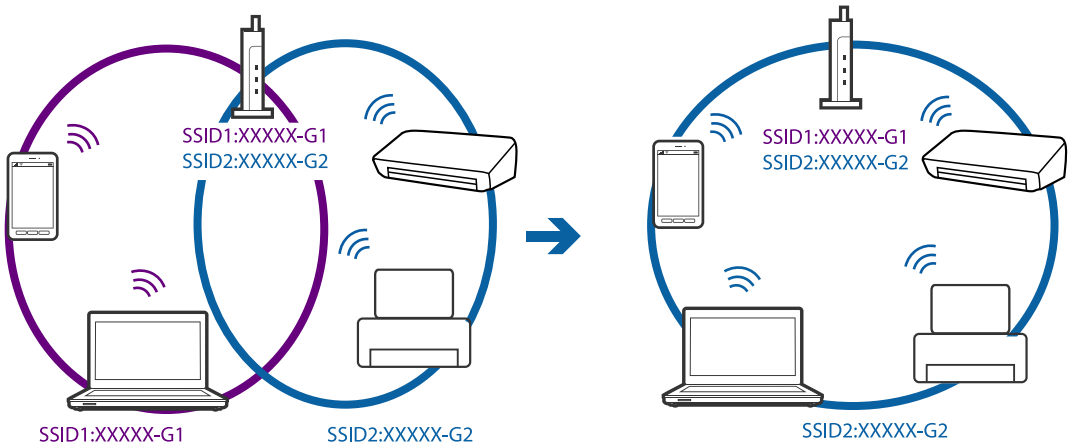

❏ An access point that is compliant with both IEEE802.11a and IEEE802.11g has SSIDs of 2.4 GHz and 5 GHz. If you connect the computer or smart device to a 5 GHz SSID, you cannot be able to connect to the printer because the printer only supports communication over 2.4 GHz. Connect the computer or smart device to the same SSID as the printer.

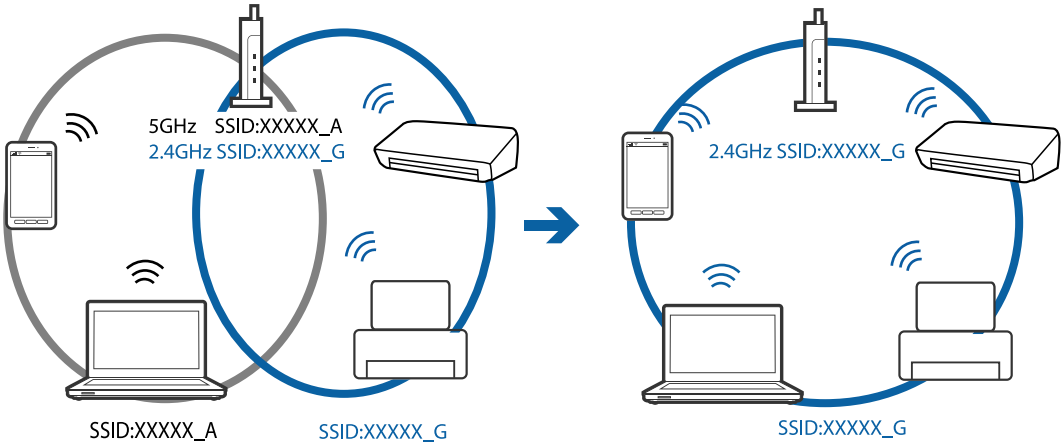

❏ Most access points have a privacy separator feature that blocks the communication from unauthorized devices. If you cannot connect to the network even if the devices and access point are connected to the same SSID, disable the privacy separator on the access point. See the manual provided with the access point for details.

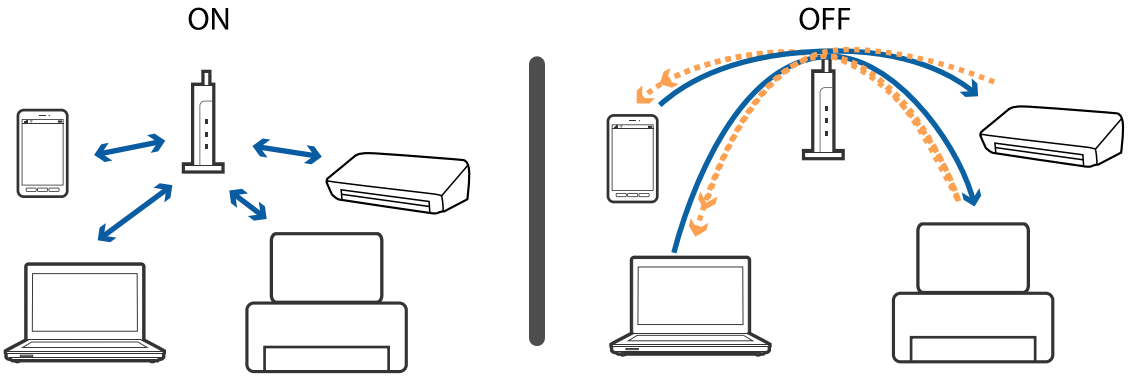

Related Information

➡ "Checking the SSID Connected to the Printer" on page 128
➡ "Checking the SSID for the Computer" on page 129

Checking the SSID Connected to the Printer

You can check the SSID by printing a network connection report, network status sheet, or on Web Config.

Checking the SSID for the Computer

Windows

Select **Control Panel** > **Network and Internet** > **Network and Sharing Center**.

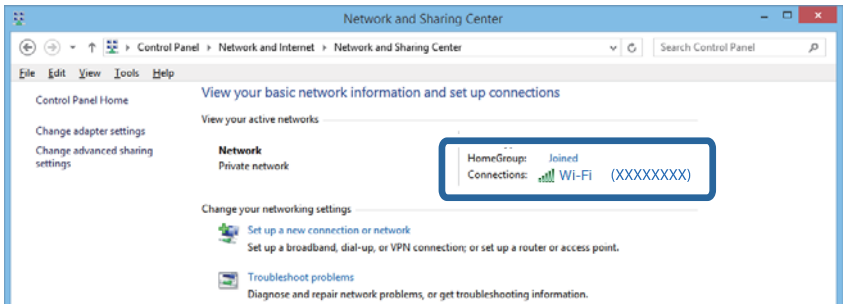

Mac OS X

Click the Wi-Fi icon at the top of the computer screen. A list of SSIDs is displayed and the connected SSID is indicated with a check mark.

Suddenly the Printer Cannot Print over a Network Connection

- ❏ When you have changed your access point or provider, try making network settings for the printer again. Connect the computer or smart device to the same SSID as the printer.
- ❏ Turn off the devices you want to connect to the network. Wait for about 10 seconds, and then turn on the devices in the following order; access point, computer or smart device, and then printer. Move the printer and computer or smart device closer to the access point to help with radio wave communication, and then try to make network settings again.

- ❏ In Windows, click **Print Queue** on the printer driver's **Maintenance** tab, and then check the following.
  - ❏ Check if there are any paused print jobs. Cancel printing if necessary.
  - ❏ Make sure the printer is not offline or pending. If the printer is offline or pending, clear the offline or pending setting from the **Printer** menu.
  - ❏ Make sure the printer is selected as the default printer from the **Printer** menu (there should be a check mark on the menu item).

    If the printer is not selected as the default printer, set it as the default printer.
  - ❏ Check if the selected port is correct in **Printer Properties** > **Port**
- ❏ Select **Setup** > **Network Settings** > **Connection Check**, and then print the network connection report. If the report shows that the network connection failed, check the network connection report and then follow the printed solutions.
- ❏ Try accessing any website from your computer to make sure that your computer's network settings are correct. If you cannot access any website, there is a problem on the computer. See the manual provided with your computer for more details.

Related Information

➡ "Checking the SSID Connected to the Printer" on page 128
➡ "Checking the SSID for the Computer" on page 129
➡ "Messages and Solutions on the Network Connection Report" on page 27
➡ "Cannot Connect from Devices Even Though Network Settings are No Problem" on page 127

Suddenly the Printer Cannot Print Using a USB Connection

- ❏ Disconnect the USB cable from the computer. Right-click on the printer icon displayed on the computer, and then select **Remove Device**. Next, connect the USB cable to the computer and try a test print. If printing is possible, the setup is complete.
- ❏ Re-set the USB connection following the steps in [Changing a Connection Method to a Computer] in this manual.

Related Information

➡ "Changing the Connection Method to a Computer" on page 31

Cannot Print from an iPhone or iPad

- ❏ Connect the iPhone or iPad to the same network (SSID) as the printer.
- ❏ Enable **Paper Configuration** in the following menus.

  Setup > **Printer Setup** > **Paper Source Settings** > **Paper Configuration**
- ❏ Enable the AirPrint setting on Web Config.

Related Information

➡ "Connecting to a Smart Device" on page 22
➡ "Web Config" on page 105

Printing is Paused

If you are printing a large data size image, printing may be paused and the paper may be ejected. Print the image at a lower resolution or a smaller size.

Printout Problems

Printout is Scuffed or Color is Missing

If you have not used the printer for a long time, the print head nozzles may be clogged and ink drops may not be discharged. Perform a nozzle check, and then clean the print head if any of the print head nozzles are clogged.

Related Information

➡ "Checking and Cleaning the Print Head" on page 94

Banding or Unexpected Colors Appear

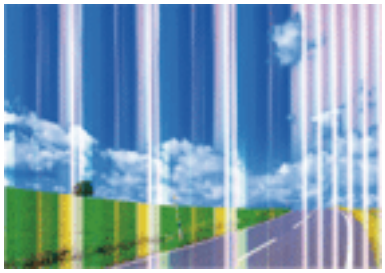

The print head nozzles may be clogged. Perform a nozzle check to check if the print head nozzles are clogged. Clean the print head if any of the print head nozzles are clogged.

Related Information

➡ "Checking and Cleaning the Print Head" on page 94

Colored Banding Appears at Intervals of Approximately 2.5 cm

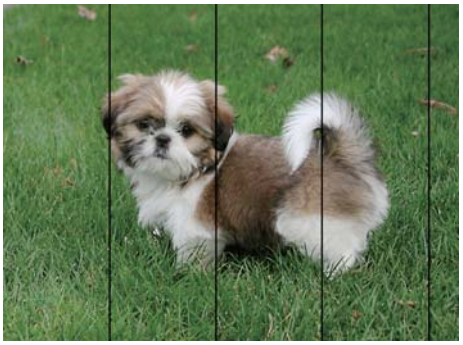

❑ Select the appropriate paper type setting for the type of paper loaded in the printer.

❑ Align the print head from a computer.

❑ When printing on plain paper, print using a higher quality setting.

Related Information

➡ "List of Paper Types" on page 36

➡ "Aligning the Print Head - Windows" on page 96

➡ "Aligning the Print Head - Mac OS X" on page 97

Blurry Prints, Vertical Banding, or Misalignment

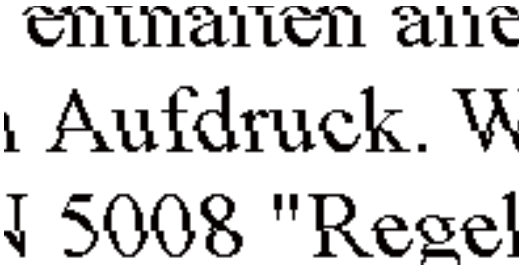

Align the print head.

Related Information

➡ "Aligning the Print Head" on page 95

Print Quality Does Not Improve Even After Aligning the Print Head

During bidirectional (or high speed) printing, the print head prints while moving in both directions, and vertical lines may be misaligned. If print quality does not improve, disable the bidirectional (or high speed) setting. Disabling this setting may slow down printing speed.

❑ Windows

Clear **High Speed** on the printer driver's **More Options** tab.

❏ Mac OS X

Select **System Preferences** from the menu > **Printers & Scanners** (or **Print & Scan**, **Print & Fax**), and then select the printer. Click **Options & Supplies** > **Options** (or **Driver**). Select **Off** as the **High Speed Printing** setting.

Print Quality is Poor

Check the following if the print quality is poor due to blurry prints, banding, missing colors, faded colors, and misalignment in the prints.

❏ Use paper supported by this printer.

❏ Select the appropriate paper type setting for the type of paper loaded in the printer.

❏ Do not print on paper that is damp, damaged, or too old.

❏ If the paper is curled or the envelope is puffed up, flatten it.

❏ Perform a nozzle check, and then clean the print head if any of the print head nozzles are clogged.

❏ Align the print head.

❏ Print using a higher quality setting.

❏ Do not stack the paper immediately after printing.

❏ Dry the printouts completely before filing or displaying them. When drying the printouts, avoid direct sun light, do not use a dryer, and do not touch the printed side of paper.

❏ When printing images or photos, Epson recommends using genuine Epson paper rather than plain paper. Print on the printable side of the genuine Epson paper.

❏ Try to use genuine Epson ink cartridges. This product is designed to adjust colors based on the use of genuine Epson ink cartridges. The use of non-genuine ink cartridges may cause print quality to decline.

❏ Epson recommends using the ink cartridge before the date printed on the package.

❏ For best results, use up ink cartridge within six months of opening the package.

Related Information

➡ "Available Paper and Capacities" on page 35

➡ "List of Paper Types" on page 36

➡ "Paper Handling Precautions" on page 34

➡ "Checking and Cleaning the Print Head" on page 94

➡ "Aligning the Print Head" on page 95

Paper Is Smeared or Scuffed

❏ When horizontal banding appears or the top or bottom of the paper is smeared, load paper in the correct direction and slide the edge guides to the edges of the paper.

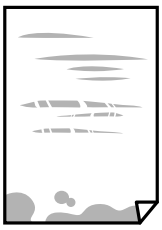

❏ When vertical banding appears or the paper is smeared, clean the paper path.

❏ Place the paper on a flat surface to check if it is curled. If it is, flatten it.

❏ When performing manual 2-sided printing, make sure that the ink is completely dry before reloading the paper.

Related Information

➡ "Loading Paper in the Rear Paper Feed" on page 36

➡ "Cleaning the Paper Path" on page 97

Printed Photos are Sticky

You may be printing on the wrong side of the photo paper. Make sure you are printing on the printable side.

When printing on the wrong side of the photo paper, you need to clean the paper path.

Related Information

➡ "Cleaning the Paper Path" on page 97

Images or Photos are Printed in Unexpected Colors

When printing from the Windows printer driver, the Epson auto photo adjustment setting is applied by default depending on the paper type. Try change the setting.

On the **More Options** tab, select **Custom** in **Color Correction**, and then click **Advanced**. Change the **Scene Correction** setting from **Auto Correct** to any other option. If changing the setting does not work, use any color correction method other than **PhotoEnhance** in **Color Management**.

Related Information

➡ "Adjusting the Print Color" on page 63

Colors Differ from What You See on the Display

- ❏ Display devices such as computer screens have their own display properties. If the display is unbalanced, the image are not displayed with proper brightness and colors. Adjust the properties of the device.
- ❏ Light shining into the display has an effect on how the image is seen on the display. Avoid direct sunlight and confirm the image where an appropriate illuminance is assured.
- ❏ Colors may differ from what you see on smart devices such as smart phones or tablets with high-resolution displays.
- ❏ Colors on a display are not quite identical to those on paper because the display device and the printer have a different process of producing colors.

Cannot Print Without Margins

Make borderless setting in the print settings. If you select a paper type that does not support borderless printing, you cannot select **Borderless**. Select a paper type that supports borderless printing.

Related Information

➡ "Menu Options for Print Photos Mode" on page 47
➡ "Menu Options for Copy Mode" on page 69
➡ "Printing Basics - Windows" on page 47
➡ "Printing Basics - Mac OS X" on page 49

Edges of the Image are Cropped During Borderless Printing

During borderless printing, the image is slightly enlarged and the protruding area is cropped. Select a smaller enlargement setting.

- ❏ Windows

  Click **Settings** next to the **Borderless** checkbox on the printer driver's **Main** tab, and then change the settings.
- ❏ Mac OS X

  Change the **Expansion** setting from the print dialog's **Print Settings** menu.

The Position, Size, or Margins of the Printout Are Incorrect

- ❏ Load paper in the correct direction, and slide the edge guides against the edges of the paper.
- ❏ When placing the originals on the scanner glass, align the corner of the original with the corner indicated by a symbol on the frame of the scanner glass. If the edges of the copy are cropped off, move the original slightly away from the corner.
- ❏ When placing the originals on the scanner glass, clean the scanner glass and the document cover. If there is dust or stains on the glass, the copy area may extend to include the dust or stains, resulting in the wrong copying position or small images.

- ❏ Select the appropriate paper size setting.
- ❏ Adjust the margin setting in the application so that it falls within the printable area.

Related Information

➡ "Loading Paper in the Rear Paper Feed" on page 36
➡ "Placing Originals on the Scanner Glass" on page 40
➡ "Cleaning the Scanner Glass" on page 98
➡ "Printable Area" on page 145

Printed Characters Are Incorrect or Garbled

- ❏ Connect the USB cable securely to the printer and the computer.
- ❏ Cancel any paused print jobs.
- ❏ Do not put the computer manually into the **Hibernate** mode or the **Sleep** mode while printing. Pages of garbled text may be printed next time you start the computer.

Related Information

➡ "Canceling Printing" on page 67

The Printed Image Is Inverted

Clear any mirror image settings in the printer driver or the application.

- ❏ Windows

  Clear **Mirror Image** on the printer driver's **More Options** tab.
- ❏ Mac OS X

  Clear **Mirror Image** from the print dialog's **Print Settings** menu.

Mosaic-Like Patterns in the Prints

When printing images or photos, print using high-resolution data. Images on websites are often low resolution although they look good enough on the display, and so print quality may decline.

Uneven Colors, Smears, Dots, or Straight Lines Appear in the Copied Image

- ❏ Clean the paper path.
- ❏ Clean the scanner glass.
- ❏ Do not press too hard on the original or the document cover when you are placing the originals on the scanner glass.
- ❏ When the paper is smeared, lower the copy density setting.

Related Information

➡ "Cleaning the Paper Path" on page 97
➡ "Cleaning the Scanner Glass" on page 98
➡ "Menu Options for Copy Mode" on page 69

Moiré (Cross-Hatch) Patterns Appear in the Copied Image

Change the reduce and enlarge setting or place the original at a slightly different angle.

Related Information

➡ "Menu Options for Copy Mode" on page 69

An Image of the Reverse Side of the Original Appears in the Copied Image

❏ For a thin original, place the original on the scanner glass and then place a piece of black paper over it.

❏ Lower the copy density setting on the control panel.

Related Information

➡ "Menu Options for Copy Mode" on page 69

The Printout Problem Could Not be Cleared

If you have tried all of the solutions and have not solved the problem, try uninstalling and then reinstalling the printer driver.

Related Information

➡ "Uninstalling Applications" on page 116
➡ "Installing Applications" on page 117

Other Printing Problems

Printing Is Too Slow

❏ Close any unnecessary applications.

❏ Lower the quality setting. High quality printing slows down the printing speed.

❏ Enable the bidirectional (or high speed) setting. When this setting is enabled, the print head prints while moving in both directions, and the printing speed increases.

❏ Windows

Select **High Speed** on the printer driver's **More Options** tab.

❏ Mac OS X

Select **System Preferences** from the menu > **Printers & Scanners** (or **Print & Scan**, **Print & Fax**), and then select the printer. Click **Options & Supplies** > **Options** (or **Driver**). Select **On** as the **High Speed Printing** setting.

❏ Disable **Quiet Mode**.

❏ Control Panel

From the home screen, select **Quiet Mode**, and then disable it.

❏ Windows

Select **Off** as the **Quiet Mode** setting on the printer driver's **Main** tab.

❏ Mac OS X

Select **System Preferences** from the menu > **Printers & Scanners** (or **Print & Scan**, **Print & Fax**), and then select the printer. Click **Options & Supplies** > **Options** (or **Driver**). Select **Off** as the **Quiet Mode** setting.

Printing Slows Down Dramatically During Continuous Printing

Printing slows down to prevent the printer mechanism from overheating and being damaged. However, you can continue printing. To return to normal printing speed, leave the printer idle for at least 30 minutes. Printing speed does not return to normal if the power is off.

Cannot Cancel Printing from a Computer Running Mac OS X v10.6.8

If you want to stop printing from your computer, make the following settings.

Run Web Config, and then select **Port9100** as the **Top Priority Protocol** setting in **AirPrint Setup**. Select **System Preferences** from the menu > **Printers & Scanners** (or **Print & Scan**, **Print & Fax**), remove the printer, and then add the printer again.

Related Information

➡ "Web Config" on page 105

Cannot Start Scanning

❏ Connect the USB cable securely to the printer and the computer.

❏ If you are using a USB hub, try to connect the printer directly to the computer.

❏ If you scan at a high resolution over a network, a communication error may occur. Lower the resolution.

❏ Make sure you select the correct printer (scanner) if a scanner list is displayed when you start Epson Scan 2.

❏ Make sure that the correct printer (scanner) is selected on Epson Scan 2.

- ❏ If you are using any TWAIN-compliant applications, select the printer (scanner) you are using.
- ❏ In Windows, make sure the printer (scanner) is displayed in **Scanner and Camera**. The printer (scanner) should be displayed as "EPSON XXXXX (printer name)". If the printer (scanner) is not displayed, uninstall and then re-install Epson Scan 2. See the following to access **Scanner and Camera**.
  - ❏ Windows 10

    Right-click the start button or press and hold it, select **Control Panel**, enter "Scanner and Camera" in the search charm, click **View scanners and cameras**, and then check if the printer is displayed.
  - ❏ Windows 8.1/Windows 8

    Select **Desktop** > **Settings** > **Control Panel**, enter "Scanner and Camera" in the search charm, click **Show Scanner and Camera**, and then check if the printer is displayed.
  - ❏ Windows 7

    Click the start button and select **Control Panel**, enter "Scanner and Camera" in the search charm, click **View scanners and cameras**, and then check if the printer is displayed.
  - ❏ Windows Vista

    Click the start button, select **Control Panel** > **Hardware and Sound** > **Scanners and Cameras**, and then check if the printer is displayed.
  - ❏ Windows XP

    Click the start button, select **Control Panel** > **Printers and Other Hardware** > **Scanner and Cameras**, and then check if the printer is displayed.
- ❏ If you cannot scan using any TWAIN-compliant applications, uninstall and then reinstall the TWAIN-compliant application.

Related Information

➡ "Uninstalling Applications" on page 116

➡ "Installing Applications" on page 117

Cannot Start Scanning when Using the Control Panel

- ❏ Make sure Epson Scan 2 and Epson Event Manager are installed correctly.
- ❏ Check the scanning setting assigned in Epson Event Manager.

Related Information

➡ "Epson Scan 2 (Scanner Driver)" on page 113

➡ "Epson Event Manager" on page 113

Scanned Image Problems

Uneven Colors, Dirt, Spots, and so on Appear when Scanning from the Scanner Glass

- ❏ Clean the scanner glass.

- ❏ Remove any trash or dirt that adheres to the original.
- ❏ Do not press with too much force on the original or the document cover. If you press with too much force, blurring, smudges, and spots may occur.

Related Information

➡ "Cleaning the Scanner Glass" on page 98

The Image Quality Is Rough

- ❏ Set the **Mode** in Epson Scan 2 according to the original you want to scan. Scan using the settings for documents in **Document Mode**, and the settings for photos in **Photo Mode**.
- ❏ In Epson Scan 2, adjust the image using items on the **Advanced Settings** tab, and then scan.
- ❏ If the resolution is low, try increasing the resolution and then scanning.

Related Information

➡ "Scanning Using Epson Scan 2" on page 75

Offset Appears in the Background of Images

Images on the back of the original may appear in the scanned image.

- ❏ In Epson Scan 2, select the **Advanced Settings** tab, and then adjust the **Brightness**.

  This feature may not be available depending on the settings on the **Main Settings** tab > **Image Type** or other settings on the **Advanced Settings** tab.
- ❏ In **Document Mode** in Epson Scan 2, select the **Advanced Settings** tab, and then **Image Option** > **Text Enhancement**.
- ❏ When scanning from the scanner glass, place black paper or a desk pad over the original.

Related Information

➡ "Placing Originals on the Scanner Glass" on page 40
➡ "Scanning Using Epson Scan 2" on page 75

Text is Blurred

- ❏ In **Document Mode** in Epson Scan 2, select the **Advanced Settings** tab, and then **Image Option** > **Text Enhancement**.
- ❏ Select **Document Mode** as the **Mode** in Epson Scan 2. Scan using the settings for documents in **Document Mode**.
- ❏ In **Document Mode** in Epson Scan 2, when **Image Type** on the **Main Settings** tab is set to **Black & White**, adjust **Threshold** on the **Advanced Settings** tab. When you increase the **Threshold**, the black color area becomes larger.
- ❏ If the resolution is low, try increasing the resolution and then scanning.

Related Information

➡ "Scanning Documents (Document Mode)" on page 75

Moiré Patterns (Web-Like Shadows) Appear

If the original is a printed document, moiré patterns (web-like shadows) may appear in the scanned image.

❏ On the **Advanced Settings** tab in Epson Scan 2, set **Descreening**.

❏ Change the resolution, and then scan again.

Related Information

➡ "Scanning Using Epson Scan 2" on page 75

Cannot Scan the Correct Area on the Scanner Glass

❏ Make sure the original is placed correctly against the alignment marks.

❏ If the edge of the scanned image is missing, move the original slightly away from the edge of the scanner glass.

❏ When placing multiple originals on the scanner glass, make sure there is a gap of at least 20 mm (0.79 in.) between the originals.

❏ When scanning from the control panel and selecting the auto scan area cropping function, remove any trash or dirt from the scanner glass and document cover. If there is any trash or dirt around the original, the scanning range expands to include it.

Related Information

➡ "Placing Originals on the Scanner Glass" on page 40

Cannot Preview in Thumbnail

❏ When placing multiple originals on the scanner glass, make sure there is a gap of at least 20 mm (0.79 in.) between the originals.

❏ Check that the original is placed straight.

❏ Depending on the original, previewing may not be performed in **Thumbnail**. In this situation, scan in **Normal** preview, and then create marquees manually.

Related Information

➡ "Scanning Photos or Pictures (Photo Mode)" on page 77

Text is Not Recognized Correctly when Saving as a Searchable PDF

- ❏ On the **Image Format Options** window in Epson Scan 2, check that **Text Language** is set correctly on the **Text** tab.
- ❏ Check that the original is placed straight.
- ❏ Use an original with clear text. Text recognition may decline for the following types of originals.
  - ❏ Originals that have been copied a number of times
  - ❏ Originals received by fax (at low resolutions)
  - ❏ Originals on which the letter spacing or line spacing is too small
  - ❏ Originals with ruled lines or underlining over the text
  - ❏ Originals with hand-written text
  - ❏ Originals with creases or wrinkles
- ❏ In **Document Mode** in Epson Scan 2, when **Image Type** on the **Main Settings** tab is set to **Black & White**, adjust **Threshold** on the **Advanced Settings** tab. When you increase the **Threshold**, black becomes stronger.
- ❏ In **Document Mode** in Epson Scan 2, select the **Advanced Settings** tab, and then **Image Option** > **Text Enhancement**.

Related Information

➡ "Scanning Documents (Document Mode)" on page 75

Cannot Solve Problems in the Scanned Image

If you have tried all of the solutions and have not solved the problem, initialize the Epson Scan 2 settings using Epson Scan 2 Utility.

Note:
Epson Scan 2 Utility is an application that comes with Epson Scan 2.

1. Start Epson Scan 2 Utility.
   - ❏ Windows 10

     Click the start button, and then select **All apps** > **EPSON** > **Epson Scan 2 Utility**.
   - ❏ Windows 8.1/Windows 8

     Enter the application name in the search charm, and then select the displayed icon.
   - ❏ Windows 7/Windows Vista/Windows XP

     Click the start button, and then select **All Programs** or **Programs** > **EPSON** > **Epson Scan 2** > **Epson Scan 2 Utility**.
   - ❏ Mac OS X

     Select **Go** > **Applications** > **Epson Software** > **Epson Scan 2 Utility**.
2. Select the **Other** tab.
3. Click **Reset**.

   Note:
   If initialization does not solve the problem, uninstall and re-install Epson Scan 2.

Related Information

➡ "Uninstalling Applications" on page 116
➡ "Installing Applications" on page 117

Other Scanning Problems

Scanning Is Too Slow

Lower the resolution.

Related Information

➡ "Scanning Using Epson Scan 2" on page 75

Scanning Stops when Scanning to PDF/Multi-TIFF

- ❏ When scanning using Epson Scan 2, you can continuously scan up to 999 pages in PDF format and up to 200 pages in Multi-TIFF format.
- ❏ When scanning large volumes, we recommend scanning in grayscale.
- ❏ Increase the free space on the computer's hard disk. Scanning may stop if there is not enough free space.
- ❏ Try scanning at a lower resolution. Scanning stops if the total data size reaches the limit.

Related Information

➡ "Scanning Using Epson Scan 2" on page 75

Other Problems

Slight Electric Shock when Touching the Printer

If many peripherals are connected to the computer, you may feel a slight electric shock when touching the printer. Install a ground wire to the computer that is connected to the printer.

Operation Sounds Are Loud

If operations sounds are too loud, enable **Quiet Mode**. Enabling this feature may reduce printing speed. Depending on the paper type and print quality settings you selected, there may be no difference in the printer's noise level.

- ❏ Control Panel

  From the home screen, select **Quiet Mode**, and then enable it.

❏ Windows

Enable **Quiet Mode** on the **Main** tab in the printer driver.

❏ Mac OS X

Select **System Preferences** from the menu > **Printers & Scanners** (or **Print & Scan**, **Print & Fax**), and then select the printer. Click **Options & Supplies** > **Options** (or **Driver**). Select **On** as the **Quiet Mode** setting.

Cannot Save the Data to a Memory Card

❏ Use a memory card which is supported by the printer.

❏ Check that the memory card is not write protected.

❏ Check that the memory card has enough available memory. If the available memory is low, data cannot be saved.

Related Information

➡ "Supported Memory Card Specifications" on page 149

Application Is Blocked by a Firewall (for Windows Only)

Add the application to the Windows Firewall allowed program in security settings on the **Control Panel**.

"?" Is Displayed on the Photo Selection Screen

"?" is displayed on the LCD screen when the image file is not supported by the product.

Related Information

➡ "Supported Data Specifications" on page 149

Appendix

Technical Specifications

Printer Specifications

Print Head Nozzle Placement		Black ink nozzles: 180 Color ink nozzles: 59 for each color
Weight of Paper	Plain Paper	64 to 90 g/m²(17 to 24lb)
	Envelopes	Envelope #10, DL, C6: 75 to 90 g/m² (20 to 24 lb)

Printable Area

Printable Area for Single Sheets

Print quality may decline in the shaded areas due to the printer's mechanism.

Border printing

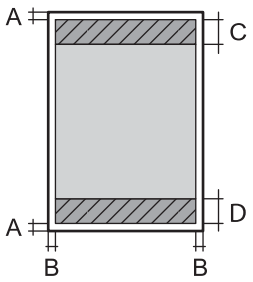

A	3.0 mm (0.12 in.)
B	3.0 mm (0.12 in.)
C	40.0 mm (1.57 in.)
D	32.0 mm (1.26 in.)

Borderless printing

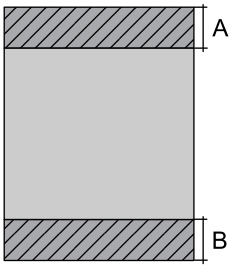

A	43.0 mm (1.69 in.)
B	35.0 mm (1.38 in.)

Printable Area for Envelopes

Print quality may decline in the shaded areas due to the printer's mechanism.

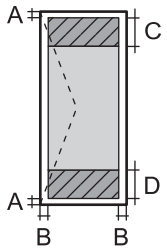	A	3.0 mm (0.12 in.)
	B	5.0 mm (0.20 in.)
	C	18.0 mm (0.71 in.)
	D	40.0 mm (1.57 in.)

Scanner Specifications

Scanner Type	Flatbed
Photoelectric Device	CIS
Maximum Document Size	216×297 mm (8.5×11.7 in.) A4, Letter
Resolution	1200 dpi (main scan) 2400 dpi (sub scan)
Color Depth	Color ❏ 48 bits per pixel internal (16 bits per pixel per color internal) ❏ 24 bits per pixel external (8 bits per pixel per color external) Grayscale ❏ 16 bits per pixel internal ❏ 8 bits per pixel external Black and white ❏ 16 bits per pixel internal ❏ 1 bits per pixel external
Light Source	LED

Interface Specifications

For Computer	Hi-Speed USB

Network Function List

Functions			Supported	Remarks
Network Interfaces	Ethernet		-	-
	Wi-Fi	Infrastructure	✓	-
		Ad hoc	-	-
		Wi-Fi Direct (Simple AP)	✓	-

Appendix

Functions			Supported	Remarks
Concurrent Connection	Ethernet and Wi-Fi Direct (Simple AP)		-	-
	Wi-Fi (Infrastructure) and Wi-Fi Direct (Simple AP)		✓	-
Panel Operation	Wi-Fi Setup	Wi-Fi Setup Wizard	✓	-
		Push Button Setup (WPS)	✓	-
		PIN Code Setup	✓	-
		Wi-Fi Auto Connect	✓	-
		Epson iPrint Connection	-	-
		Wi-Fi Direct Setup	✓	-
	General Network Setup		-	-
	Network Connection Check		✓	-
	Network Status		-	-
	Network Status Sheet Printing		✓	-
	Disable Wi-Fi		✓	-
	Restore the Factory Default Settings		✓	-
	File Sharing Setup		✓	Memory Card only
Network Printing	EpsonNet Print (Windows)	IPv4	✓	-
	Standard TCP/IP (Windows)	IPv4,IPv6	✓	-
	WSD Printing (Windows)	IPv4,IPv6	✓	Windows Vista or later
	Bonjour Printing (Mac OS X)	IPv4,IPv6	✓	-
	IPP Printing (Windows,Mac OS X)	IPv4,IPv6	✓	-
	UPnP Printing	IPv4	-	Information Appliance
	PictBridge Printing (Wi-Fi)	IPv4	-	Digital Camera
	Epson Connect (Email Print)	IPv4	✓	-
	AirPrint (iOS,Mac OS X)	IPv4,IPv6	✓	iOS 5 or later, Mac OS X v10.7 or later
	Google Cloud Print	IPv4,IPv6	✓	-

Functions			Supported	Remarks
Network Scanning	Epson Scan 2	IPv4,IPv6	✓	-
	Event Manager	IPv4	✓	-
	Epson Connect (Scan to Cloud)	IPv4	-	-
	AirPrint (Scan)	IPv4,IPv6	✓	Mac OS X v10.9 or later
	ADF (AutoReversing)		-	-
Fax	Send a fax	IPv4	-	-
	Receive a fax	IPv4	-	-
	AirPrint (Faxout)	IPv4,IPv6	-	Mac OS X v10.8 or later

Wi-Fi Specifications

Standards	IEEE802.11b/g/n*1
Frequency Range	2.4 GHz
Maximum Radio-Frequency Power Transmitted	17 dBm (EIRP)
Coordination Modes	Infrastructure, Wi-Fi Direct (Simple AP)*2
Wireless Securities	WEP (64/128bit), WPA2-PSK (AES)*3

*1 Complies with either IEEE 802.11b/g/n or IEEE 802.11b/g depending on location of purchase.

*2 Not supported for IEEE 802.11b.

*3 Complies with WPA2 standards with support for WPA/WPA2 Personal.

Security Protocol

SSL/TLS	HTTPS Server/Client, IPPS

Supported Third Party Services

AirPrint	Print	iOS 5 or later/Mac OS X v10.7.x or later
	Scan	Mac OS X v10.9.x or later
Google Cloud Print		

External Storage Device Specifications

Supported Memory Card Specifications

Compatible Memory Cards	Maximum Capacities
miniSD*	2 GB
miniSDHC*	32 GB
microSD*	2 GB
microSDHC*	32 GB
microSDXC*	64 GB
SD	2 GB
SDHC	32 GB
SDXC	64 GB

* Attach an adapter to fit the memory card slot. Otherwise, the card may get stuck.

Supported memory card voltages

3.3 V type, dual voltage (3.3 V and 5V) type (supply voltage: 3.3 V)

5 V memory cards are not supported.

Maximum supply current: 200 mA

Supported Data Specifications

File Format	JPEG with the Exif Version 2.3 standard taken by digital cameras DCF*1 version 1.0 or 2.0*2 compliant
Image Size	Horizontal: 80 to 10200 pixels Vertical: 80 to 10200 pixels
File Size	Less than 2 GB
Maximum Number of Files	2000

*1 Design rule for Camera File system.

*2 Photo data stored in the built-in memory of a digital camera is not supported.

Note:
"?" is displayed on the LCD screen when the printer cannot recognize the image file. In this situation, if you select a multiple image layout, blank sections will be printed.

Dimensions

Dimensions	Storage ❏ Width: 390 mm (15.4 in.) ❏ Depth: 300 mm (11.8 in.) ❏ Height: 146 mm (5.7 in.) Printing ❏ Width: 390 mm (15.4 in.) ❏ Depth: 528 mm (20.8 in.) ❏ Height: 279 mm (11.0 in.)
Weight*	Approx. 4.3 kg (9.5 lb)

* Without the ink cartridges and the power cord.

Electrical Specifications

Model	100 to 240 V Model	220 to 240 V Model
Rated Frequency Range	50 to 60 Hz	50 to 60 Hz
Rated Current	0.5 to 0.3 A	0.3 A
Power Consumption (with USB Connection)	Standalone copying: Approx. 13.0 W (ISO/IEC24712) Ready mode: Approx. 4.3 W Sleep mode: Approx. 1.6 W Power off: Approx. 0.3 W	Standalone copying: Approx. 13.0 W (ISO/IEC24712) Ready mode: Approx. 4.3 W Sleep mode: Approx. 1.6 W Power off: Approx. 0.3 W

Note:
❏ *Check the label on the printer for its voltage.*

Environmental Specifications

Operation	Use the printer within the range shown in the following graph. 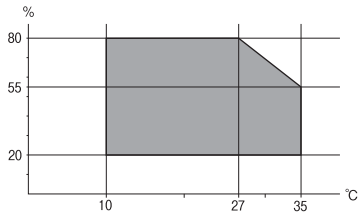 Temperature: 10 to 35°C (50 to 95°F) Humidity: 20 to 80% RH (without condensation)

Storage	Temperature: -20 to 40°C (-4 to 104°F)* Humidity: 5 to 85% RH (without condensation)

* You can store for one month at 40°C (104°F).

Environmental Specifications for Ink Cartridges

Storage Temperature	-30 to 40 °C (-22 to 104 °F)*
Freezing Temperature	-16 °C (3.2 °F) Ink thaws and is usable after approximately 3 hours at 25 °C (77 °F).

* You can store for one month at 40 °C (104 °F).

System Requirements

❏ Windows 10 (32-bit, 64-bit)/Windows 8.1 (32-bit, 64-bit)/Windows 8 (32-bit, 64-bit)/Windows 7 (32-bit, 64-bit)/Windows Vista (32-bit, 64-bit)/Windows XP SP3 or later (32-bit)/Windows XP Professional x64 Edition SP2 or later

Mac OS X v10.11.x/Mac OS X v10.10.x/Mac OS X v10.9.x/Mac OS X v10.8.x/Mac OS X v10.7.x/Mac OS X v10.6.8

Note:

❏ *Mac OS X may not support some applications and features.*

❏ *The UNIX File System (UFS) for Mac OS X is not supported.*

Regulatory Information

Standards and Approvals

Standards and Approvals for European Model

For European users

Hereby, Seiko Epson Corporation declares that the following radio equipment model is in compliance with Directive 2014/53/EU. The full text of the EU declaration of conformity is available at the following website.

http://www.epson.eu/conformity

C462U

For use only in Ireland, UK, Austria, Germany, Liechtenstein, Switzerland, France, Belgium, Luxemburg, Netherlands, Italy, Portugal, Spain, Denmark, Finland, Norway, Sweden, Iceland, Croatia, Cyprus, Greece, Slovenia, Malta, Bulgaria, Czech, Estonia, Hungary, Latvia, Lithuania, Poland, Romania, and Slovakia.

Epson cannot accept responsibility for any failure to satisfy the protection requirements resulting from a non-recommended modification of the products.

CE

Restrictions on Copying

Observe the following restrictions to ensure the responsible and legal use of the printer.

Copying of the following items is prohibited by law:

- ❏ Bank bills, coins, government-issued marketable securities, government bond securities, and municipal securities
- ❏ Unused postage stamps, pre-stamped postcards, and other official postal items bearing valid postage
- ❏ Government-issued revenue stamps, and securities issued according to legal procedure

Exercise caution when copying the following items:

- ❏ Private marketable securities (stock certificates, negotiable notes, checks, etc.), monthly passes, concession tickets, etc.
- ❏ Passports, driver's licenses, warrants of fitness, road passes, food stamps, tickets, etc.

Note:
Copying these items may also be prohibited by law.

Responsible use of copyrighted materials:

Printers can be misused by improperly copying copyrighted materials. Unless acting on the advice of a knowledgeable attorney, be responsible and respectful by obtaining the permission of the copyright holder before copying published material.

Transporting the Printer

When you need to transport the printer to move or for repairs, follow the steps below to pack the printer.

Important:

- ❏ *When storing or transporting the printer, avoid tilting it, placing it vertically, or turning it upside down; otherwise ink may leak.*
- ❏ *Leave the ink cartridges installed. Removing the cartridges can dry out the print head and may prevent the printer from printing.*

1. Turn off the printer by pressing the ⏻ button.
2. Make sure the power light turns off, and then unplug the power cord.

   Important:
   Unplug the power cord when the power light is off. Otherwise, the print head does not return to the home position causing the ink to dry, and printing may become impossible.

3. Disconnect all cables such as the power cord and USB cable.
4. Make sure there is no memory card inserted.
5. Remove all of the paper from the printer.
6. Make sure there are no originals on the printer.
7. Open the scanner unit with the document cover closed. Secure the ink cartridge holder to the case with tape.

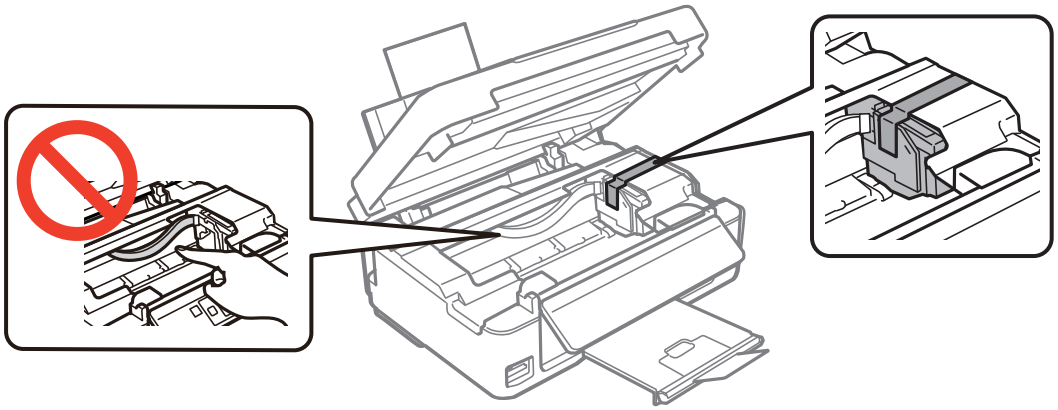

8. Close the scanner unit.

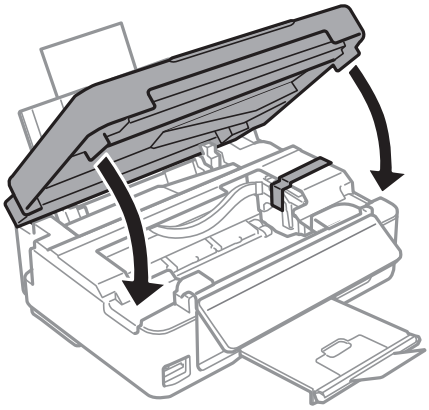

9. Prepare to pack the printer as shown below.

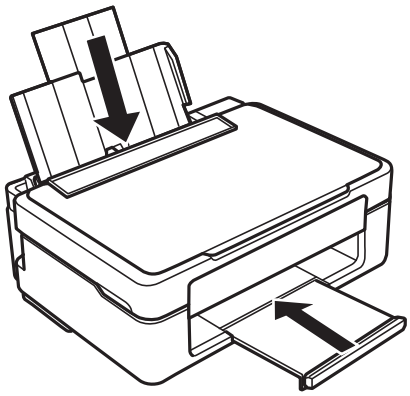

10. Pack the printer in its box, using the protective materials.

When you use the printer again, make sure you remove the tape securing the ink cartridge holder. If print quality has declined the next time you print, clean and align the print head.

Related Information

➡ "Part Names and Functions" on page 13
➡ "Checking and Cleaning the Print Head" on page 94
➡ "Aligning the Print Head" on page 95

Accessing a Memory Card From a Computer

You can write or read data on an external storage device such as a memory card that has been inserted in the printer from a computer.

Important:

- *Insert a memory card after removing write protection.*
- *If an image is saved to the memory card from a computer, the image and the number of photos are not refreshed on the LCD screen. Remove and insert the memory card again.*
- *When sharing an external device inserted in the printer between computers connected over USB and over a network, write access is only allowed to the computers that are connected by the method you selected on the printer. To write to the external storage device, enter* ***Setup*** *on the control panel and select* ***File Sharing*** *and a connection method.*

Note:
It takes a while to recognize data from a computer if a large external storage device, such as 2TB HDD, is connected.

Windows

Select an external storage device in **Computer** or **My Computer**. The data on the external storage device is displayed.

Note:
*If you connected the printer to the network without the software disc or Web Installer, map a memory card slot or USB port as a network drive. Open **Run** and enter a printer name \\XXXXX or a printer's IP address \\XXX.XXX.XXX.XXX to **Open:**. Right-click a device icon displayed to assign the network. The network drive appears in **Computer** or **My Computer**.*

Mac OS X

Select a corresponding device icon. The data on the external storage device is displayed.

Note:
- *To remove an external storage device, drag and drop the device icon to the trash icon. Otherwise, data in the shared drive may not be displayed correctly when another external storage device is inserted.*
- *To access an external storage device through the network, select **Go** > **Connect to Server** from the menu on the desktop. Enter a printer name cifs://XXXXX or smb://XXXXX (Where "XXXXX" is the printer name) in the **Server Address**, and then click **Connect**.*

Related Information

➡ "Inserting a Memory Card" on page 43
➡ "Supported Memory Card Specifications" on page 149

Where to Get Help

Technical Support Web Site

If you need further help, visit the Epson support website shown below. Select your country or region and go to the support section of your local Epson website. The latest drivers, FAQs, manuals, or other downloadables are also available from the site.

http://support.epson.net/

http://www.epson.eu/Support (Europe)

If your Epson product is not operating properly and you cannot solve the problem, contact Epson support services for assistance.

Contacting Epson Support

Before Contacting Epson

If your Epson product is not operating properly and you cannot solve the problem using the troubleshooting information in your product manuals, contact Epson support services for assistance. If Epson support for your area is not listed below, contact the dealer where you purchased your product.

Epson support will be able to help you much more quickly if you give them the following information:

- Product serial number

  (The serial number label is usually on the back of the product.)

- Product model

- ❏ Product software version

  (Click **About**, **Version Info**, or a similar button in the product software.)
- ❏ Brand and model of your computer
- ❏ Your computer operating system name and version
- ❏ Names and versions of the software applications you normally use with your product

Note:
Depending on the product, the dial list data for fax and/or network settings may be stored in the product's memory. Due to breakdown or repair of a product, data and/or settings may be lost. Epson shall not be responsible for the loss of any data, for backing up or recovering data and/or settings even during a warranty period. We recommend that you make your own backup data or take notes.

Help for Users in Europe

Check your Pan-European Warranty Document for information on how to contact Epson support.