EPSON
EXCEED YOUR VISION

User's Guide

NPD5241-01 EN

Copyright

No part of this publication may be reproduced, stored in a retrieval system, or transmitted in any form or by any means, electronic, mechanical, photocopying, recording, or otherwise, without the prior written permission of Seiko Epson Corporation. No patent liability is assumed with respect to the use of the information contained herein. Neither is any liability assumed for damages resulting from the use of the information herein. The information contained herein is designed only for use with this Epson product. Epson is not responsible for any use of this information as applied to other products.

Neither Seiko Epson Corporation nor its affiliates shall be liable to the purchaser of this product or third parties for damages, losses, costs, or expenses incurred by the purchaser or third parties as a result of accident, misuse, or abuse of this product or unauthorized modifications, repairs, or alterations to this product, or (excluding the U.S.) failure to strictly comply with Seiko Epson Corporation's operating and maintenance instructions.

Seiko Epson Corporation and its affiliates shall not be liable for any damages or problems arising from the use of any options or any consumable products other than those designated as Original Epson Products or Epson Approved Products by Seiko Epson Corporation.

Seiko Epson Corporation shall not be held liable for any damage resulting from electromagnetic interference that occurs from the use of any interface cables other than those designated as Epson Approved Products by Seiko Epson Corporation.

© 2018 Seiko Epson Corporation. All rights reserved.

The contents of this manual and the specifications of this product are subject to change without notice.

Trademarks

- ❏ EPSON® is a registered trademark, and EPSON EXCEED YOUR VISION or EXCEED YOUR VISION is a trademark of Seiko Epson Corporation.
- ❏ PRINT Image Matching™ and the PRINT Image Matching logo are trademarks of Seiko Epson Corporation. Copyright © 2001 Seiko Epson Corporation. All rights reserved.
- ❏ EPSON Scan software is based in part on the work of the Independent JPEG Group.
- ❏ libtiff

  Copyright © 1988-1997 Sam Leffler

  Copyright © 1991-1997 Silicon Graphics, Inc.

  Permission to use, copy, modify, distribute, and sell this software and its documentation for any purpose is hereby granted without fee, provided that (i) the above copyright notices and this permission notice appear in all copies of the software and related documentation, and (ii) the names of Sam Leffler and Silicon Graphics may not be used in any advertising or publicity relating to the software without the specific, prior written permission of Sam Leffler and Silicon Graphics.

  THE SOFTWARE IS PROVIDED "AS-IS" AND WITHOUT WARRANTY OF ANY KIND, EXPRESS, IMPLIED OR OTHERWISE, INCLUDING WITHOUT LIMITATION, ANY WARRANTY OF MERCHANTABILITY OR FITNESS FOR A PARTICULAR PURPOSE.

  IN NO EVENT SHALL SAM LEFFLER OR SILICON GRAPHICS BE LIABLE FOR ANY SPECIAL, INCIDENTAL, INDIRECT OR CONSEQUENTIAL DAMAGES OF ANY KIND, OR ANY DAMAGES WHATSOEVER RESULTING FROM LOSS OF USE, DATA OR PROFITS, WHETHER OR NOT ADVISED OF THE POSSIBILITY OF DAMAGE, AND ON ANY THEORY OF LIABILITY, ARISING OUT OF OR IN CONNECTION WITH THE USE OR PERFORMANCE OF THIS SOFTWARE.
- ❏ SDXC Logo is a trademark of SD-3C, LLC.



- ❏ PictBridge is a trademark.



- ❏ Microsoft®, Windows®, and Windows Vista® are registered trademarks of Microsoft Corporation.
- ❏ Apple, Macintosh, Mac OS, OS X, Bonjour, Safari, iPad, iPhone, iPod touch, and iTunes are trademarks of Apple Inc., registered in the U.S. and other countries. AirPrint and the AirPrint logo are trademarks of Apple Inc.
- ❏ Google Cloud Print™, Chrome™, Chrome OS™, and Android™ are trademarks of Google Inc.
- ❏ Adobe, Adobe Reader, Acrobat, and Photoshop are trademarks of Adobe systems Incorporated, which may be registered in certain jurisdictions.
- ❏ Intel® is a registered trademark of Intel Corporation.
- ❏ General Notice: Other product names used herein are for identification purposes only and may be trademarks of their respective owners. Epson disclaims any and all rights in those marks.

Contents

Copyright

Trademarks

About This Manual

Introduction to the Manuals. 8
Marks and Symbols. 8
Descriptions Used in this Manual. 9
Operating System References. 9

Important Instructions

Safety Instructions. 10
Printer Advisories and Warnings. 10
Advisories and Warnings for Setting Up/ Using the Printer. 11
Advisories and Warnings for Using the Printer with a Wireless Connection. 12
Advisories and Warnings for Using Memory Cards. 12
Advisories and Warnings for Using the Touchpad. 12
Protecting Your Personal Information. 12

Printer Basics

Part Names and Functions. 13
Control Panel. 15
Buttons. 16
Guide to the LCD Screen. 16

Loading Paper

Paper Handling Precautions. 19
Available Paper and Capacities. 20
List of Paper Types. 21
Loading Paper in the Paper Cassette 1. 22
Loading Paper in the Paper Cassette 2. 26

Placing Originals on the Scanner Glass

Inserting a Memory Card

Supported Memory Cards. 33
Inserting and Removing a Memory Card. 33

Loading a CD/DVD for Printing

Printable CD/DVDs. 36
CD/DVD Handling Precautions. 36
Loading a CD/DVD. 37
Removing a CD/DVD. 39

Printing

Printing from the Control Panel. 40
Printing Photos by Selecting from a Memory Card. 40
Printing Photos from a Memory Card onto a CD/DVD Label. 41
Printing Photos from a Memory Card with Handwritten Notes. 42
Printing Original Writing Paper and Calendars. . 44
Printing Original Envelopes. 45
Printing Photos Using Other Features. 47
Menu Options for Printing from the Control Panel. 48
Printing from a Computer. 51
Printing Basics - Windows. 51
Printing Basics - Mac OS X. 53
Printing on 2-Sides. 55
Printing Several Pages on One Sheet. 57
Printing to Fit the Paper Size. 58
Printing Multiple Files Together (for Windows Only). 60
Printing One Image on Multiple Sheets to Create a Poster (for Windows Only). 61
Printing Using Advanced Features. 67
Printing Photos Using Epson Easy Photo Print. . 69
Printing a CD/DVD Label with Epson Print CD. 70
Printing from Smart Devices. 70
Using Epson iPrint. 70
Using AirPrint. 72
Printing from a Digital Camera. 73
Printing from a Digital Camera Connected by USB Cable. 73
Printing from a Digital Camera Connected Wirelessly. 74
Canceling Printing. 75
Canceling Printing - Printer Button. 75
Canceling Printing - Windows. 75
Canceling Printing - Mac OS X. 75

Copying

Copying Basics. 76
Menu Options for Copy Mode. 76
Copying Photos. 79
Menu Options for Copy/Restore Photos. 79
Copying on a CD/DVD Label. 80
Menu Options for Copy to CD/DVD. 81

Scanning

Scanning Using the Control Panel. 83
Scanning to a Memory Card. 83
Scanning to the Cloud. 83
Scanning to a Computer. 84
Scanning to a Computer (WSD). 85
Menu Options for Scanning. 85
Scanning from a Computer. 86
Scanning Basics. 86
Scanning Using Advanced Features. 89
Scanning from Smart Devices. 92
Installing Epson iPrint. 92
Using Epson iPrint. 92

Replacing Ink Cartridges

Checking the Ink Levels. 94
Checking the Ink Levels - Control Panel. 94
Checking the Ink Levels - Windows. 94
Checking the Ink Levels - Mac OS X. 94
Ink Cartridge Codes. 94
Ink Cartridge Handling Precautions. 95
Replacing Ink Cartridges. 97
Temporarily Printing with Black Ink. 100
Temporarily Printing with Black Ink - Windows 101
Temporarily Printing with Black Ink - Mac OS X. 102
Conserving Black Ink when the Black Ink Is Low (for Windows Only). 103

Maintaining the Printer

Checking and Cleaning the Print Head. 104
Checking and Cleaning the Print Head - Control Panel. 104
Checking and Cleaning the Print Head - Windows. 105
Checking and Cleaning the Print Head - Mac OS X. 105
Aligning the Print Head. 106
Aligning the Print Head - Control Panel. 106
Aligning the Print Head - Windows. 107
Aligning the Print Head - Mac OS X. 107
Cleaning the Paper Path. 107
Cleaning the Scanner Glass. 108
Saving Power. 108
Saving Power - Control Panel. 108
Saving Power - Windows. 109
Saving Power - Mac OS X. 109

Menu Options for Setup Mode

Menu Options for Ink Levels. 110
Menu Options for Maintenance. 110
Menu Options for Printer Setup. 110
Menu Options for Network Settings. 111
Menu Options for Epson Connect Services. 112
Menu Options for Google Cloud Print Services. . . 113
Menu Options for File Sharing Setup. 113
Menu Options for External Device Setup. 113
Menu Options for Guide Functions. 114
Menu Options for Firmware Update. 114
Menu Options for Restore Default Settings. 114

Network Service and Software Information

Epson Connect Service. 116
Web Config. 116
Running Web Config on a Web Browser. 117
Running Web Config on Windows. 117
Running Web Config on Mac OS X. 117
Windows Printer Driver. 118
Guide to Windows Printer Driver. 118
Making Operation Settings for the Windows Printer Driver. 121
Mac OS X Printer Driver. 122
Guide to Mac OS X Printer Driver. 122
Making Operation Settings for the Mac OS X Printer Driver. 123
EPSON Scan (Scanner Driver). 124
Epson Event Manager. 124
Epson Easy Photo Print. 125
Epson Print CD. 125
E-Web Print (for Windows Only). 126
Easy Photo Scan. 126
EPSON Software Updater. 126
Uninstalling Applications. 127

Uninstalling Applications - Windows. 127
Uninstalling Applications - Mac OS X. 127
Installing Applications. 128
Updating Applications and Firmware. 129
Updating the Printer's Firmware using the Control Panel. 129

Solving Problems

Checking the Printer Status. 131
Checking Messages on the LCD Screen. 131
Checking the Printer Status - Windows. 132
Checking Printer Status - Mac OS X. 132
Removing Jammed Paper. 133
Removing Jammed Paper from the Paper Cassette. 133
Removing Jammed Paper from Inside the Printer. 134
Removing Jammed Paper from the Rear Cover. 136
Paper Does Not Feed Correctly. 137
Paper Jams. 138
Paper Feeds at a Slant. 138
Several Sheets of Paper are Fed at a Time. 138
No Paper Feeds. 138
CD/DVD Tray is Ejected. 138
Power and Control Panel Problems. 139
Power Does Not Turn On. 139
Lights Came On and then Went Out. 139
Power Does Not Turn Off. 139
LCD Screen Gets Dark. 139
Cannot Print from a Computer. 139
Cannot Use AirPrint. 140
Printout Problems. 140
Nothing or a Very Faint Image is Printed. 140
Print Quality is Poor. 141
Print Quality Does Not Improve Even After Aligning the Print Head. 141
Images or Photos are Printed in Unexpected Colors. 142
Banding Appears at Intervals of Approximately 2.5 cm. 142
Copy Quality Is Poor. 142
An Image of the Reverse Side of the Original Appears in the Copied Image. 143
The Position, Size, or Margins of the Printout Are Incorrect. 143
Multiple Originals are Copied onto a Single Sheet. 143
Cannot Print Without Margins. 143
Edges of the Image are Cropped During Borderless Printing. 144
Printing Position of Photo Stickers is Incorrect. 144
Printing Position on a CD/DVD is Incorrect. . . 144
Paper Is Smeared or Scuffed. 144
Paper is Smeared During Automatic 2-Sided Printing. 145
Printed Characters Are Incorrect or Garbled. . . 145
The Printed Image Is Inverted. 145
The Printout Problem Could Not be Cleared. . . 146
Other Printing Problems. 146
Printing Is Too Slow. 146
Printing Slows Down Dramatically During Continuous Printing. 147
Cannot Cancel Printing from a Computer Running Mac OS X v10.6.8. 147
Cannot Start Scanning. 147
Cannot Start Scanning when Using the Control Panel. 148
Scanned Image Problems. 148
Scan Quality Is Poor. 148
Characters Are Blurred. 148
An Image of the Reverse Side of the Original Appears in the Scanned Image. 149
Moire (Cross-Hatch) Patterns Appear in the Scanned Image. 149
Scanning Area or Direction Is Not Correct. . . . 149
The Scanned Image Problem Could Not be Cleared. 150
Other Scanning Problems. 150
Cannot Scan in Full Auto Mode in EPSON Scan. 150
Thumbnail Preview Does Not Work Properly. . .150
Scanning Is Too Slow. 150
Scanning Stops when Scanning to PDF/ Multi-TIFF. 151
Other Problems. 151
Slight Electric Shock when Touching the Printer. 151
Operation Sounds Are Loud. 151
Cannot Save Data to a Memory Device. 152
Application Is Blocked by a Firewall (for Windows Only). 152
"?" Is Displayed on the Photo Selection Screen. . 152

Appendix

Technical Specifications. 153
Printer Specifications. 153
Scanner Specifications. 154
Interface Specifications. 155

Contents

Wi-Fi Specifications. 155
Security Protocol. 155
Supported Third Party Services. 155
External Storage Device Specifications. 155
Dimensions. 157
Electrical Specifications. 158
Environmental Specifications. 158
System Requirements. 159
Regulatory Information. 159
Standards and Approvals. 159
Restrictions on Copying. 161
Transporting the Printer. 161
Accessing a Memory Card From a Computer. 162
Where to Get Help. 163
Technical Support Web Site. 163
Contacting Epson Support. 164

About This Manual

Introduction to the Manuals

The following manuals are supplied with your Epson printer. As well as the manuals, check the various types of help information available from the printer itself or from the Epson software applications.

❏ Start Here (paper manual)

Provides you with information on setting up the printer, installing the software, using the printer, solving problems, and so on.

❏ User's Guide (digital manual)

This manual. Provides overall information and instructions on using the printer, and on solving problems.

❏ Network Guide (digital manual)

Provides information on network settings and solving problems when using the printer on a network.

You can obtain the latest versions of the above manuals with the following methods.

❏ Paper manual

Visit the Epson Europe support website at http://www.epson.eu/Support, or the Epson worldwide support website at http://support.epson.net/.

❏ Digital manual

Start EPSON Software Updater on your computer. EPSON Software Updater checks for available updates of Epson software applications and the digital manuals, and allows you to download the latest ones.

Related Information

➡ "EPSON Software Updater" on page 126

Marks and Symbols

> ⚠ ***Caution:***
> *Instructions that must be followed carefully to avoid bodily injury.*

> ***Important:***
> *Instructions that must be observed to avoid damage to your equipment.*

Note:
Provides complementary and reference information.

➡ Related Information

Links to related sections.

Descriptions Used in this Manual

- ❏ Screenshots of the printer driver and the EPSON Scan (scanner driver) screens are from Windows 8.1 or Mac OS X v10.10.x. The content displayed on the screens varies depending on the model and situation.
- ❏ Illustrations of the printer used in this manual are examples only. Although there may be slight differences depending on the model, the method of operation is the same.
- ❏ Some of the menu items on the LCD screen vary depending on the model and settings.

Operating System References

Windows

In this manual, terms such as "Windows 8.1", "Windows 8", "Windows 7", "Windows Vista", and "Windows XP" refer to the following operating systems. Additionally, "Windows" is used to refer to all versions.

- ❏ Microsoft® Windows® 8.1 operating system
- ❏ Microsoft® Windows® 8 operating system
- ❏ Microsoft® Windows® 7 operating system
- ❏ Microsoft® Windows Vista® operating system
- ❏ Microsoft® Windows® XP operating system
- ❏ Microsoft® Windows® XP Professional x64 Edition operating system

Mac OS X

In this manual, "Mac OS X v10.10.x" refers to OS X Yosemite, "Mac OS X v10.9.x" refers to OS X Mavericks, and "Mac OS X v10.8.x" refers to OS X Mountain Lion. Additionally, "Mac OS X" is used to refer to "Mac OS X v10.10.x", "Mac OS X v10.9.x", "Mac OS X v10.8.x", "Mac OS X v10.7.x", and "Mac OS X v10.6.8".

Important Instructions

Safety Instructions

Read and follow these instructions to ensure safe use of this printer. Make sure you keep this manual for future reference. Also, be sure to follow all warnings and instructions marked on the printer.

- ❏ Use only the power cord supplied with the printer and do not use the cord with any other equipment. Use of other cords with this printer or the use of the supplied power cord with other equipment may result in fire or electric shock.
- ❏ Be sure your AC power cord meets the relevant local safety standard.
- ❏ Never disassemble, modify, or attempt to repair the power cord, plug, printer unit, scanner unit, or options by yourself, except as specifically explained in the printer's manuals.
- ❏ Unplug the printer and refer servicing to qualified service personnel under the following conditions:

  The power cord or plug is damaged; liquid has entered the printer; the printer has been dropped or the casing damaged; the printer does not operate normally or exhibits a distinct change in performance. Do not adjust controls that are not covered by the operating instructions.
- ❏ Place the printer near a wall outlet where the plug can be easily unplugged.
- ❏ Do not place or store the printer outdoors, near excessive dirt or dust, water, heat sources, or in locations subject to shocks, vibrations, high temperature or humidity.
- ❏ Take care not to spill liquid on the printer and not to handle the printer with wet hands.
- ❏ Keep the printer at least 22 cm away from cardiac pacemakers. Radio waves from this printer may adversely affect the operation of cardiac pacemakers.
- ❏ If the LCD screen is damaged, contact your dealer. If the liquid crystal solution gets on your hands, wash them thoroughly with soap and water. If the liquid crystal solution gets into your eyes, flush them immediately with water. If discomfort or vision problems remain after a thorough flushing, see a doctor immediately.
- ❏ Be careful when you handle ink cartridges, as there may be some ink around the ink supply port.
  - ❏ If ink gets on your skin, wash the area thoroughly with soap and water.
  - ❏ If ink gets into your eyes, flush them immediately with water. If discomfort or vision problems continue after a thorough flushing, see a doctor immediately.
  - ❏ If ink gets into your mouth, see a doctor right away.
- ❏ Do not disassemble the ink cartridge; otherwise ink may get into your eyes or on your skin.
- ❏ Do not shake ink cartridges too vigorously and do not drop them. Also, be careful not to squeeze them or tear their labels. Doing so may cause ink leakage.
- ❏ Keep ink cartridges out of the reach of children.

Printer Advisories and Warnings

Read and follow these instructions to avoid damaging the printer or your property. Make sure you keep this manual for future reference.

Advisories and Warnings for Setting Up/Using the Printer

- ❏ Do not block or cover the vents and openings in the printer.
- ❏ Use only the type of power source indicated on the printer's label.
- ❏ Avoid using outlets on the same circuit as photocopiers or air control systems that regularly switch on and off.
- ❏ Avoid electrical outlets controlled by wall switches or automatic timers.
- ❏ Keep the entire computer system away from potential sources of electromagnetic interference, such as loudspeakers or the base units of cordless telephones.
- ❏ The power-supply cords should be placed to avoid abrasions, cuts, fraying, crimping, and kinking. Do not place objects on top of the power-supply cords and do not allow the power-supply cords to be stepped on or run over. Be particularly careful to keep all the power-supply cords straight at the ends and the points where they enter and leave the transformer.
- ❏ If you use an extension cord with the printer, make sure that the total ampere rating of the devices plugged into the extension cord does not exceed the cord's ampere rating. Also, make sure that the total ampere rating of all devices plugged into the wall outlet does not exceed the wall outlet's ampere rating.
- ❏ If you plan to use the printer in Germany, the building installation must be protected by a 10 or 16 amp circuit breaker to provide adequate short-circuit protection and over-current protection for the printer.
- ❏ When connecting the printer to a computer or other device with a cable, ensure the correct orientation of the connectors. Each connector has only one correct orientation. Inserting a connector in the wrong orientation may damage both devices connected by the cable.
- ❏ Place the printer on a flat, stable surface that extends beyond the base of the printer in all directions. The printer will not operate properly if it is tilted at an angle.
- ❏ When storing or transporting the printer, avoid tilting it, placing it vertically, or turning it upside down; otherwise ink may leak.
- ❏ Allow space above the printer so that you can fully raise the document cover.
- ❏ Leave enough space in front of the printer for the paper to be fully ejected.
- ❏ Avoid places subject to rapid changes in temperature and humidity. Also, keep the printer away from direct sunlight, strong light, or heat sources.
- ❏ Do not insert objects through the slots in the printer.
- ❏ Do not put your hand inside the printer during printing.
- ❏ Do not touch the white flat cable inside the printer.
- ❏ Do not use aerosol products that contain flammable gases inside or around the printer. Doing so may cause fire.
- ❏ Do not move the print head by hand; otherwise, you may damage the printer.
- ❏ Be careful not to trap your fingers when closing the scanner unit.
- ❏ Do not press too hard on the scanner glass when placing the originals.
- ❏ Always turn the printer off using the ⏻ button. Do not unplug the printer or turn off the power at the outlet until the ⏻ light stops flashing.
- ❏ Before transporting the printer, make sure that the print head is in the home (far right) position and the ink cartridges are in place.
- ❏ If you are not going to use the printer for a long period, be sure to unplug the power cord from the electrical outlet.

Advisories and Warnings for Using the Printer with a Wireless Connection

- ❏ Radio waves from this printer may negatively affect the operation of medical electronic equipment, causing them to malfunction. When using this printer inside medical facilities or near medical equipment, follow directions from the authorized personnel representing the medical facilities, and follow all posted warnings and directions on the medical equipment.
- ❏ Radio waves from this printer may negatively affect the operation of automatically controlled devices such as automatic doors or fire alarms, and could lead to accidents due to malfunction. When using this printer near automatically controlled devices, follow all posted warnings and directions on these devices.

Advisories and Warnings for Using Memory Cards

- ❏ Do not remove a memory card or turn off the printer while the memory card light is flashing.
- ❏ The methods for using memory cards vary according to card type. Be sure to refer to the manual packaged with your memory card for details.
- ❏ Use only memory cards compatible with the printer.

Related Information

➡ "Supported Memory Card Specifications" on page 155

Advisories and Warnings for Using the Touchpad

- ❏ The LCD screen may contain a few small bright or dark spots, and because of its features it may have an uneven brightness. These are normal and do not indicate that it is damaged in any way.
- ❏ Only use a dry, soft cloth for cleaning. Do not use liquid or chemical cleaners.
- ❏ The exterior cover of the touchpad could break if it receives a heavy impact. Contact your dealer if the touchpad's surface chips or cracks, and do not touch or attempt to remove the broken pieces.
- ❏ Press the touchpad gently with your finger. Do not press forcefully or operate with your nails.
- ❏ The touchpad is a capacitive touch panel, which responds only when touched directly with a finger. The panel may not respond when touched with wet hands, gloved hands, or touched through a protective sheet or sticker.
- ❏ Do not operate using sharp objects such as a ball point pen, pencil and so on.
- ❏ Condensation inside the touchpad due to abrupt changes in temperature or humidity may cause performance to deteriorate.

Protecting Your Personal Information

When you give the printer to someone else or dispose of it, erase all the personal information stored in the printer's memory by selecting **Setup** > **Restore Default Settings** > **All Settings** on the control panel.

Printer Basics

Part Names and Functions

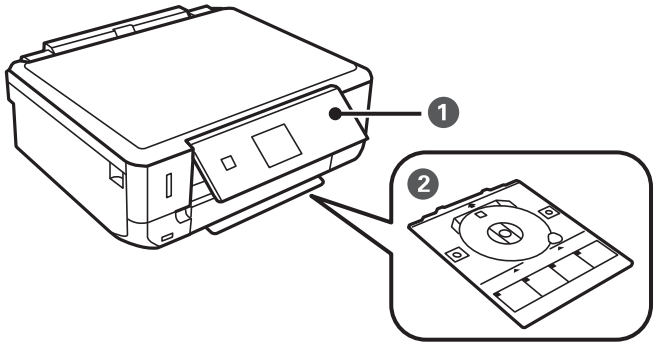

❶	Control Panel	Operates the printer.
❷	CD/DVD tray	Place a CD/DVD for label printing. This should usually be stored on the bottom of the printer.

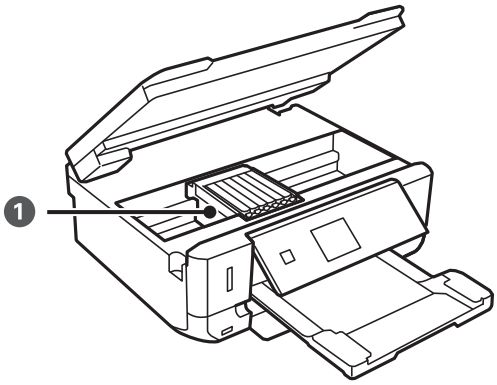

❶	Ink cartridge holder	Install the ink cartridges. Ink is ejected from the print head nozzles underneath.

Printer Basics

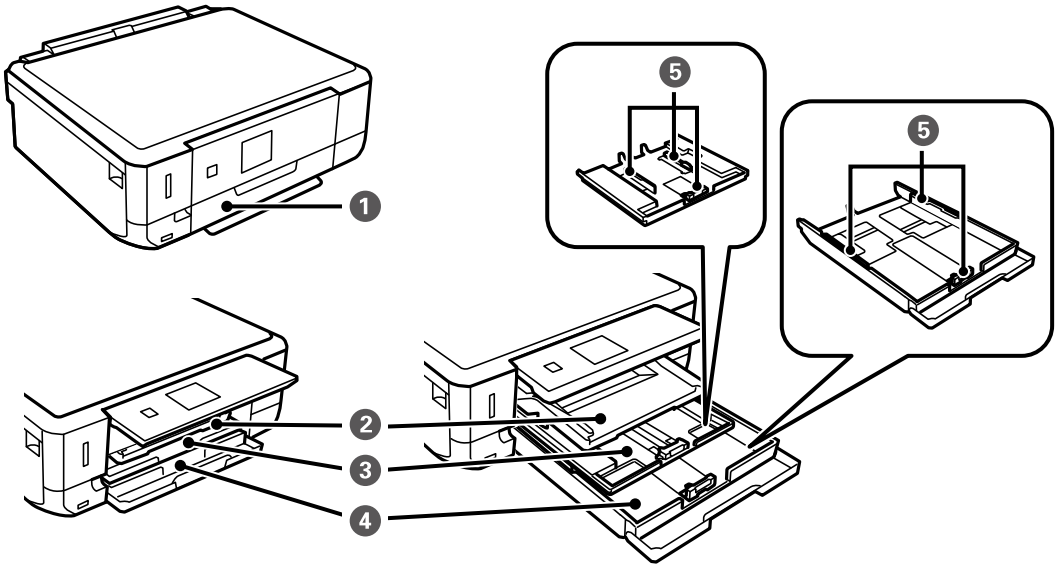

❶	Front cover	Open to load paper in the paper cassette.
❷	Output tray	Holds the ejected paper. Pull out manually and push it back in to store.
❸	Paper cassette 1	Loads paper.
❹	Paper cassette 2	
❺	Edge guide	Feeds the paper straight into the printer. Slide to the edges of the paper.

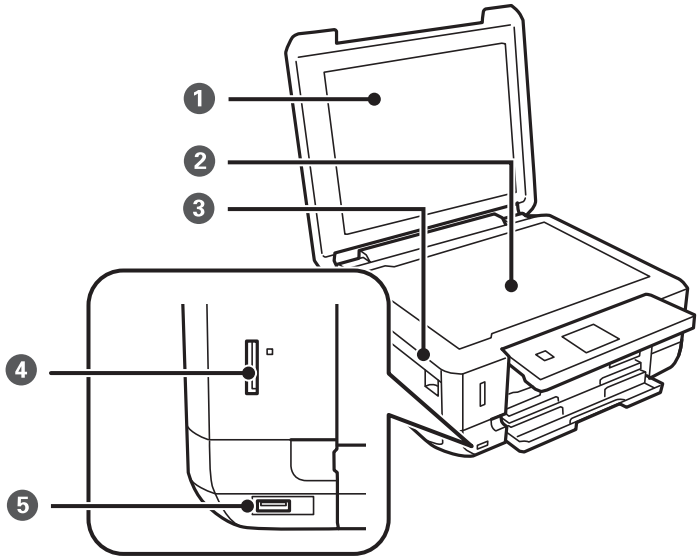

❶	Document cover	Blocks external light while scanning.
❷	Scanner glass	Place the originals.
❸	Scanner unit	Scans placed originals. Open to replace ink cartridges or to remove jammed paper. This unit should usually be kept closed.

❹	Memory card slot	Insert a memory card.
❺	External interface USB port	Connects an external storage device or a PictBridge capable device.

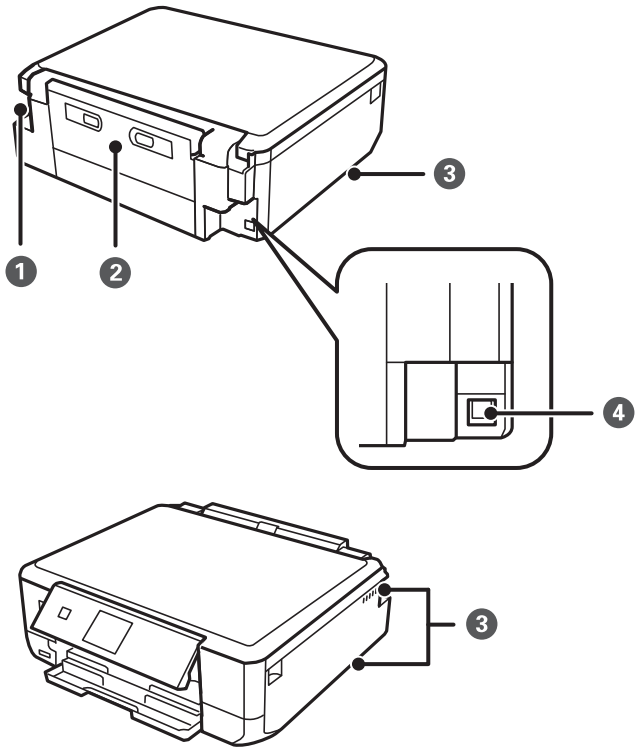

❶	AC inlet	Connects the power cord.
❷	Rear cover	Remove when removing jammed paper.
❸	Vent	Releases heat from the inside of the printer. Vents are on the bottom right, bottom left, and on the right-hand side. Do not cover the vents when placing the printer.
❹	USB port	Connects a USB cable to connect with a computer.

Control Panel

You can change the angle of the control panel.

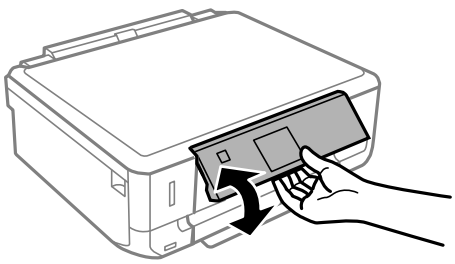

Buttons

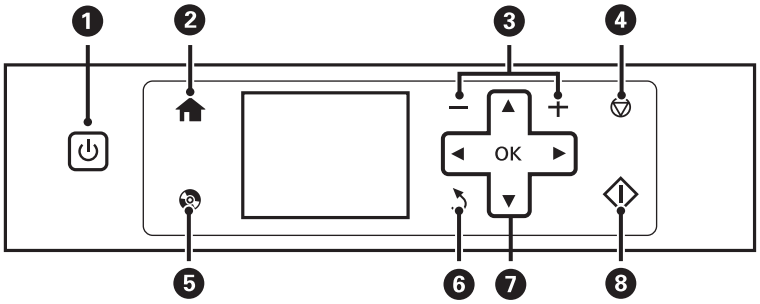

1	⏻	Turns the printer on or off. Do not turn off while the power light is flashing (while the printer is operating or processing data). Unplug the power cord when the power light is off.
2	🏠	Displays the home screen.
3	−, +	Selects the number of pages to print.
4	⊘	Stops the current operation.
5		Displays menus such as CD/DVD label printing and copying.
6	↩	Returns to the previous screen.
7	▲▼◀▶ OK	Use the ▲▼◀▶ buttons to select a menu, and then press the OK button to open the selected menu.
8	◇	Starts an operation such as printing or copying.

Guide to the LCD Screen

Menus and messages are displayed on the LCD screen. Select a menu or setting by pressing the ▲▼◀▶ buttons.

Guide to the Home Screen

The following icons and menus are displayed on the home screen.

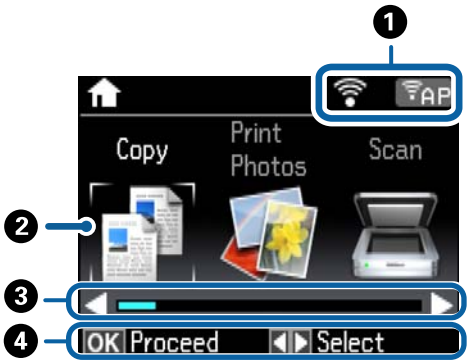

❶	Icons that show the network status are displayed. You can learn the meaning of the icons in the **Help** menu. Enter **Help** from the home screen using the ◀ or ▶ button, and then press the OK button. Select **Icon List** using the ▲ or ▼ button, and then press the OK button.	
❷	Function icons and names are displayed as mode icons.	
	Copy	Enters **Copy** mode that allows you to copy a document.
	Print Photos	Enters **Print Photos** mode that allows you to print photos on your memory card.
	Scan	Enters **Scan** mode that allows you to scan a document or a photo.
	More Functions	Enters **More Functions** mode that allows you to access a variety of printing features such as copying photos, printing photos in different layouts, and copying or printing on a CD/DVD.
	Setup	Enters **Setup** mode that allows you to make maintenance, printer setup, and network settings.
	Help	Displays help information on basic operations, meaning of the icons displayed on the LCD screen, and troubleshooting information.
	Quiet Mode	Displays **Quiet Mode** setting that allows you to reduce the noise the printer makes. However, enabling this may reduce print speed. Depending on the paper type and print quality settings you selected, there may be no difference in the printer's noise level. This is a shortcut to the following menu. **Setup** > **Printer Setup** > **Quiet Mode**
	Wi-Fi Setup	Displays menus that allow you to set up the printer for use on a wireless network. This is a shortcut to the following menu. **Setup** > **Network Settings** > **Wi-Fi Setup**
❸	When ◀ and ▶ are displayed, you can scroll right or left.	
❹	Available buttons are displayed. In this example, you can proceed to the selected menu by pressing the OK button.	

Related Information

- ➡ “Copying Basics” on page 76
- ➡ “Printing Photos by Selecting from a Memory Card” on page 40
- ➡ “Scanning Using the Control Panel” on page 83
- ➡ “Copying Photos” on page 79
- ➡ “Printing in Various Layouts” on page 47
- ➡ “Printing Photos from a Memory Card onto a CD/DVD Label” on page 41
- ➡ “Menu Options for Setup Mode” on page 110

Entering Characters

To enter characters and symbols for network settings from the control panel, use the ▲, ▼, ◀, and ▶ buttons and the software keyboard on the LCD screen. Press the ▲, ▼, ◀, or ▶ button to highlight a character or function button on the keyboard, and then press the OK button to confirm. When you have finished entering characters, highlight **Done**, and then press the OK button.

The displayed screen varies depending on the settings items. The following is the screen for entering the password for your Wi-Fi network.



Icons	Descriptions
AB12	Changes letters to uppercase.
ab12	Changes letters to lowercase.
Symbol	Displays symbols.
◀▶	Moves the cursor to the left or right.
←	Deletes a character to the left (backspace).
Space	Enters a space to the right of the cursor.
Done	Closes the software keyboard screen and displays a confirmation screen, or moves to the next screen.

Loading Paper

Paper Handling Precautions

❏ Read the instruction sheets supplied with the paper.

❏ Fan and align the edges of the paper before loading. Do not fan or curl photo paper. Doing so may damage the printable side.

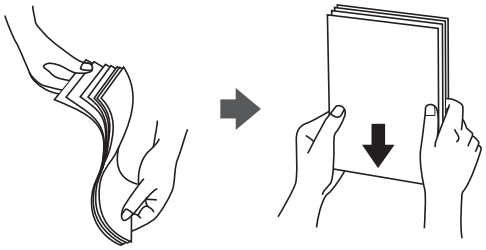

❏ If the paper is curled, flatten it or curl it slightly in the opposite direction before loading. Printing on curled paper may cause paper jams and smears on the printout.

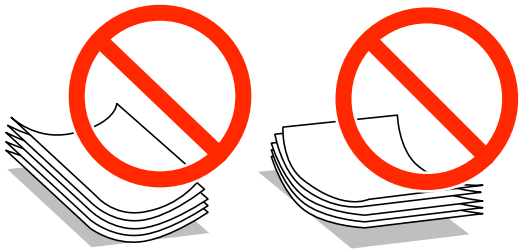

❏ Do not use paper that is wavy, torn, cut, folded, damp, too thick, too thin, or paper that has stickers stuck to it. Using these types of paper causes paper jams and smears on the printout.

❏ Fan and align the edges of the envelopes before loading. When the stacked envelopes are puffed up with air, press them down to flatten them before loading.

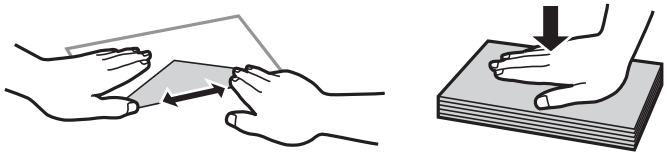

❏ Do not use envelopes that are curled or folded. Using these envelopes causes paper jams and smears on the printout.

❏ Do not use envelopes with adhesive surfaces on the flaps or window envelopes.

❏ Avoid using envelopes that are too thin, as they may curl during printing.

Related Information

➡ “Printer Specifications” on page 153

Available Paper and Capacities

Epson recommends using genuine Epson paper to ensure high-quality printouts.

Genuine Epson Paper

Media Name	Size	Loading Capacity (Sheets)		2-Sided Printing	Borderless Printing*1
		Paper Cassette 1	Paper Cassette 2		
Epson Bright White Ink Jet Paper	A4	–	80*2	Auto, Manual	–
Epson Ultra Glossy Photo Paper	A4	–	20	–	✓
	10×15 cm (4×6 in.), 13×18 cm (5×7 in.)	20	20		
Epson Premium Glossy Photo Paper	A4	–	20	–	✓
	10×15 cm (4×6 in.), 13×18 cm (5×7 in.)	20	20		
	16:9 wide size (102×181 mm)	20	20		
Epson Premium Semigloss Photo Paper	A4	–	20	–	✓
	10×15 cm (4×6 in.)	20	20		
Epson Photo Paper Glossy	A4	–	20	–	✓
	10×15 cm (4×6 in.), 13×18 cm (5×7 in.)	20	20		
Epson Matte Paper-Heavyweight	A4	–	20	–	✓
Epson Double-Sided Matte Paper	A4	–	1	Auto, Manual	✓
Epson Photo Quality Ink Jet Paper	A4	–	80	–	–
Epson Iron-On Cool Peel Transfer Paper*3	A4	–	1	–	–
Epson Photo Stickers*3	A6	1	1	–	–

*1 Borderless printing is not available for 2-sided printing.

*2 For manual 2-sided printing, you can load up to 30 sheets for paper with one side already printed.

*3 Only printing from computer is available.

Note:
The availability of paper varies by location. For the latest information on paper available in your area, contact Epson support.

Commercially Available Paper

Media Name	Size	Loading Capacity (Sheets)		2-Sided Printing	Borderless Printing
		Paper Cassette 1	Paper Cassette 2		
Plain paper	Letter*1, A4, B5*1	–	Up to the line indicated by the triangle symbol on the edge guide.*2	Auto, Manual	–
	A5	–		Manual	
	Legal*1	–	1	Manual	
	A6*1	20	20	Manual	
	User Defined*1	–	1	Manual	
Envelope*1	Envelope #10, Envelope DL, Envelope C6	–	10	–	–

*1 Only printing from computer is available.

*2 For manual 2-sided printing, you can load up to 30 sheets for paper with one side already printed.

Related Information

➡ "Part Names and Functions" on page 13

➡ "Technical Support Web Site" on page 163

List of Paper Types

To obtain optimum printing results, select the paper type that suits the paper.

Media Name	Media Type	
	Control Panel	Printer Driver, Smart device*2
Epson Bright White Ink Jet Paper*1	plain papers	plain papers
Epson Ultra Glossy Photo Paper*1	Ultra Glossy	Epson Ultra Glossy
Epson Premium Glossy Photo Paper*1	Prem. Glossy	Epson Premium Glossy
Epson Premium Semigloss Photo Paper*1	Prem. Semigloss	Epson Premium Semigloss
Epson Photo Paper Glossy*1	Glossy	Photo Paper Glossy
Epson Matte Paper-Heavyweight*1 Epson Double-Sided Matte Paper*1	Matte	Epson Matte
Epson Photo Quality Ink Jet Paper*1	Photo Quality IJ	Epson Photo Quality Ink Jet
Epson Iron-On Cool Peel Transfer Paper	plain papers	plain papers

Media Name	Media Type	
	Control Panel	**Printer Driver, Smart device**[*2]
Epson Photo Stickers[*1]	Photo Stickers	Epson Photo Stickers
Plain paper[*1]	plain papers	plain papers
Envelope	Envelope	Envelope

*1 These paper types are compatible with Exif Print and PRINT Image Matching when printing from the printer driver. For more details, see the documentation provided with the Exif Print or PRINT Image Matching compatible digital camera.

*2 For smart devices, these media types can be selected when printing using Epson iPrint.

Loading Paper in the Paper Cassette 1

You can load small size photo paper. If you load the same paper in paper cassette 2 and select **Cassette 1>Cassette 2** as the **Paper Source** setting in the print settings, the printer automatically feeds paper from paper cassette 2 when paper runs out in paper cassette 1.

Note:
When the output tray is ejected, check that there is no paper on the tray, and then close it by pushing it with your hand.

1. Raise the control panel.

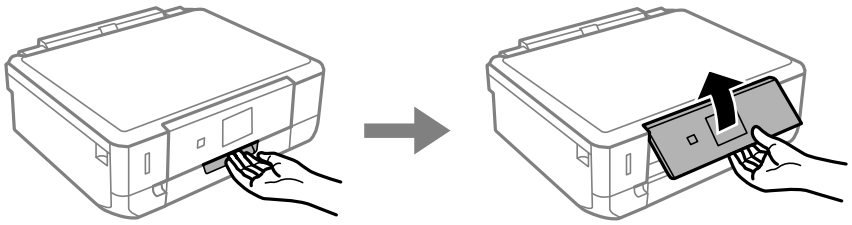

2. Open the front cover.

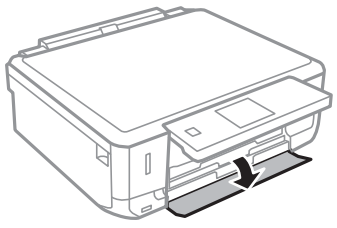

3. Check that the printer is not operating, and then pull out paper cassette 1. Paper cassette 1 has an alignment mark ▶▶ that allows you to locate it easily.

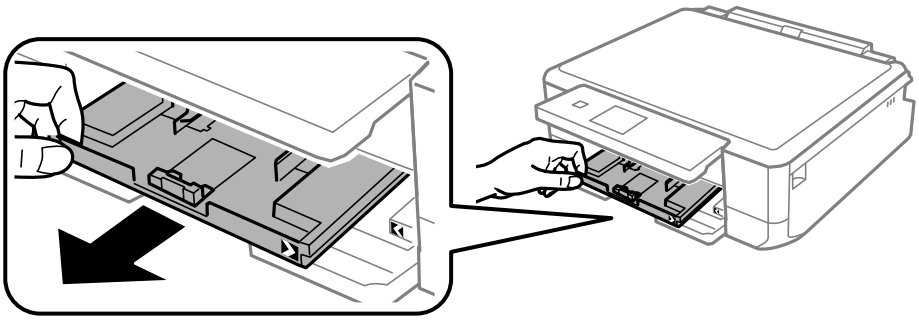

> ***Important:***
> *If paper cassette 1 is too far inside the printer, turn the printer off and on again.*

4. Slide the edge guides to their maximum position.

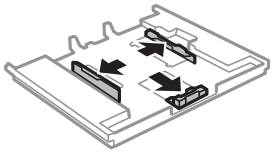

5. Slide the front edge guide to the paper size you want to use.

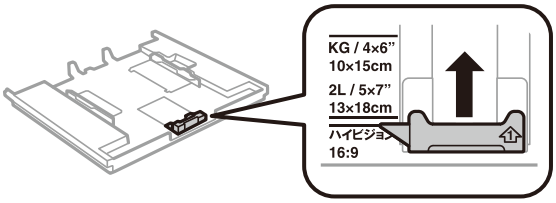

6. With the printable side facing down, load paper against the front edge guide.

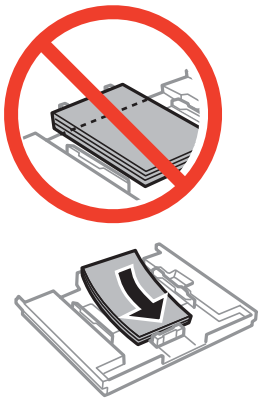

Loading Paper

Important:

❏ *Make sure the paper does not extend beyond the triangle symbol at the end of the cassette.*

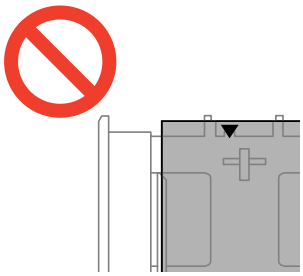

❏ *Do not load more than the maximum number of sheets specified for the paper. Do not load paper above the line indicated by the triangle symbol on the edge guide.*

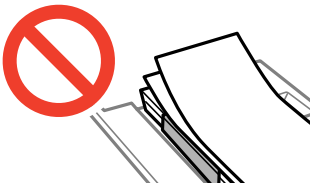

❏ Photo Sticker sheet

Follow the instructions supplied with the stickers to load one sheet of Photo Stickers. Do not load the loading support sheets into this product.

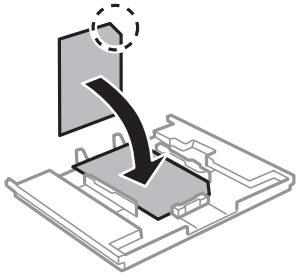

7. Slide the right edge guide to the edge of the paper.

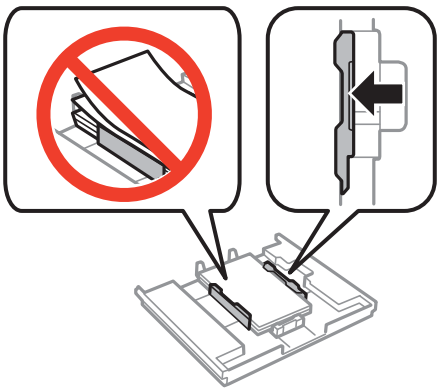

8. Insert paper cassette 1. Line up the alignment marks on the printer and the tray.

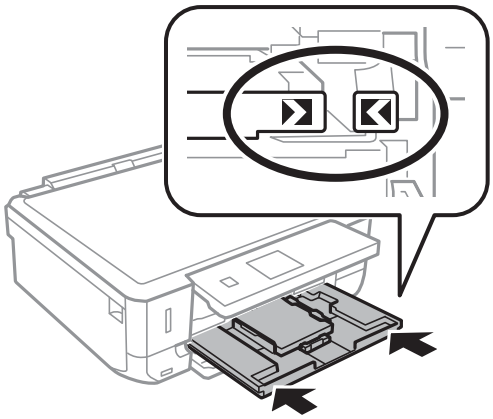

9. Check the paper size and paper type settings displayed on the control panel. To use the settings, select **Confirm** using the ▲ or ▼ button, press the OK button, and then go to step 11. To change the settings, select **Change** using the ▲ or ▼ button, press the OK button, and then go to the next step.

   Note:
   *The paper setting screen is not displayed if you have disabled **Paper Configuration** in the following menus. Go to step 11.*

   Setup** > **Printer Setup** > **Paper Source Setting** > **Paper Configuration

10. On the paper size setting screen, select the paper size using the ▲ or ▼ button, and then press the OK button. On the paper type setting screen, select the paper type in the same way, and then press the OK button. Check the settings, and then press the OK button.

    Note:
    You can also display the paper size and paper type settings screen by selecting the paper source in the following menus.

    Setup** > **Printer Setup** > **Paper Source Setting** > **Paper Setup

11. Slide out the output tray.

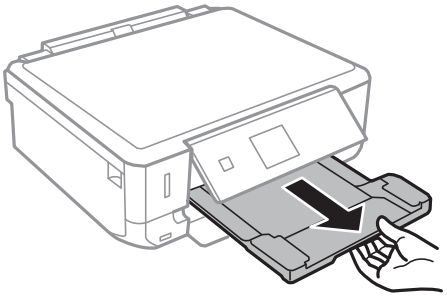

Related Information

➡ “Paper Handling Precautions” on page 19

➡ “Available Paper and Capacities” on page 20

➡ “Menu Options for Paper and Print Settings” on page 49

Loading Paper in the Paper Cassette 2

You can load almost any type of paper. We recommend loading A4 size plain paper as this is used frequently. If you load the same paper in paper cassette 1 and select **Cassette 1>Cassette 2** as the **Paper Source** setting in the print settings, the printer automatically feeds paper from paper cassette 2 when paper runs out in paper cassette 1.

Note:
When the output tray is ejected, check that there is no paper on the tray, and then close it by pushing it with your hand.

1. Raise the control panel.

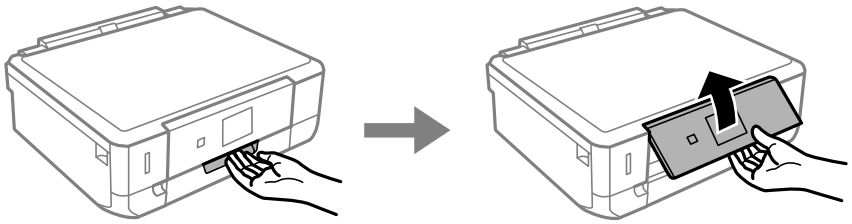

2. Open the front cover.

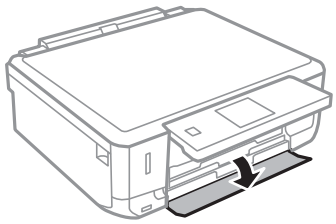

3. Check that the printer is not operating, and then pull out paper cassette 2.

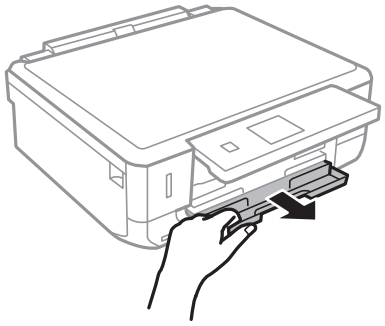

4. Slide the edge guides to their maximum position.

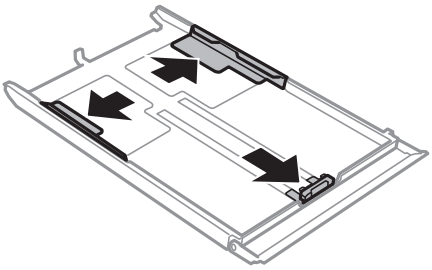

5. Slide the front edge guide to the paper size you want to use.

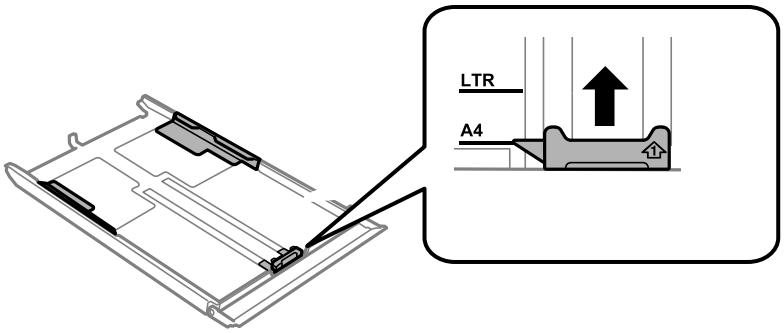

6. With the printable side facing down, load paper against the front edge guide.

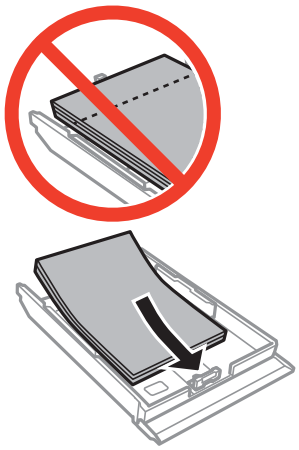

Important:

❏ *Make sure the paper does not extend beyond the triangle symbol at the end of the cassette.*

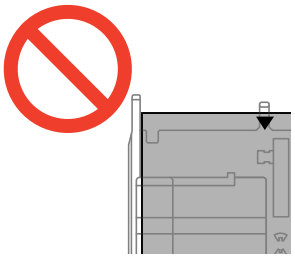

❏ *Do not load more than the maximum number of sheets specified for the paper. For plain paper, do not load above the line indicated by the triangle symbol on the edge guide.*

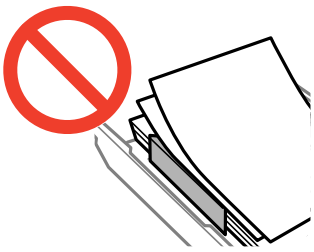

❏ Envelopes

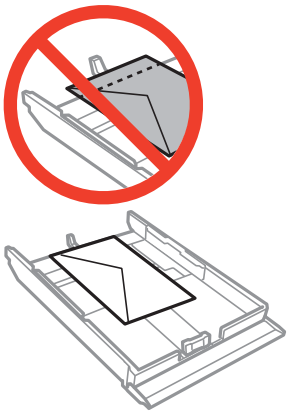

❏ Photo Sticker sheet

Follow the instructions supplied with the stickers to load one sheet of Photo Stickers. Do not load the loading support sheets into this product.

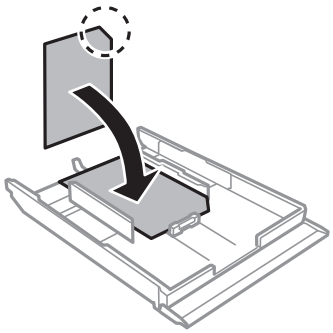

❏ Paper larger than A4 size

Pull out paper cassette 1 beforehand.

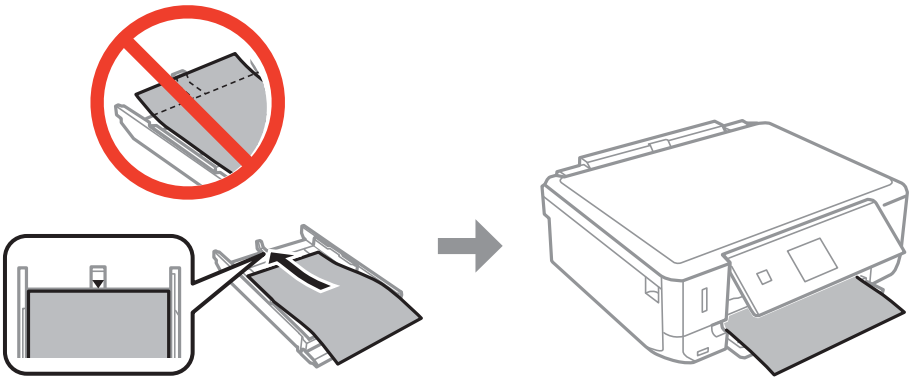

7. Slide the right edge guide to the edge of the paper.

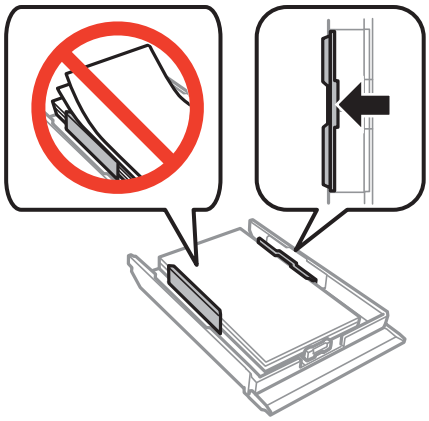

8. Insert paper cassette 2.

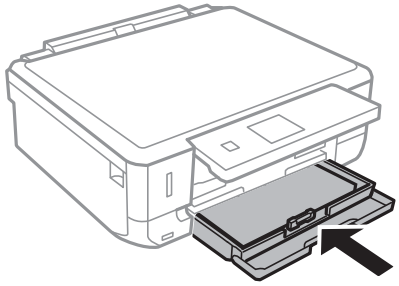

9. Check the paper size and paper type settings displayed on the control panel. To use the settings, select **Confirm** using the ▲ or ▼ button, press the OK button, and then go to step 11. To change the settings, select **Change** using the ▲ or ▼ button, press the OK button, and then go to the next step.

   Note:
   *The paper setting screen is not displayed if you have disabled **Paper Configuration** in the following menu. Go to step 11.*

   Setup** > **Printer Setup** > **Paper Source Setting** > **Paper Configuration

10. On the paper size setting screen, select the paper size using the ▲ or ▼ button, and then press the OK button. On the paper type setting screen, select the paper type in the same way, and then press the OK button. Check the settings, and then press the OK button.

    Note:
    You can also display the paper size and paper type settings screen by selecting the paper source in the following menus.

    Setup** > **Printer Setup** > **Paper Source Setting** > **Paper Setup

11. Slide out the output tray.

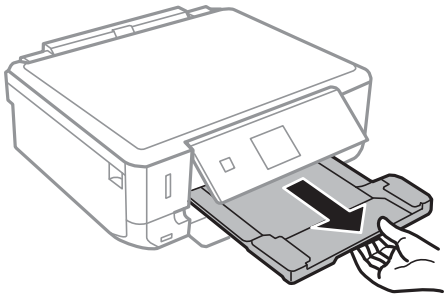

Related Information

➡ “Paper Handling Precautions” on page 19

➡ “Available Paper and Capacities” on page 20

➡ “Menu Options for Paper and Print Settings” on page 49

Placing Originals on the Scanner Glass

Important:
When placing bulky originals such as books, prevent exterior light from shining directly onto the scanner glass.

1. Open the document cover.

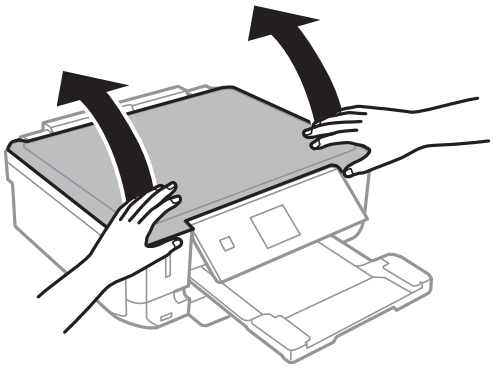

2. Remove any dust or stains on the scanner glass.

3. Place the original face-down and slide it to the corner mark.

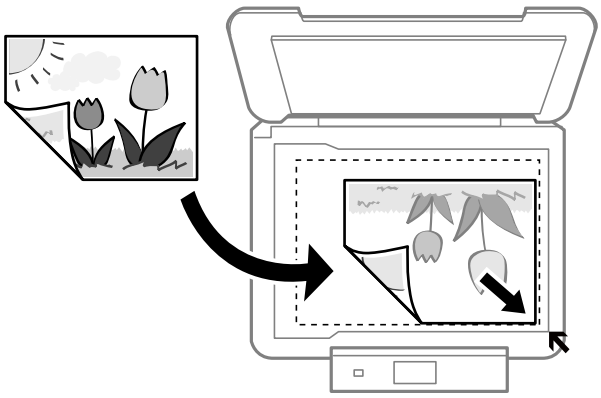

Note:
A range of 1.5 mm from the edges of the scanner glass is not scanned.

❏ When copying photos, place the photos 5 mm away from the corner mark of the scanner glass.

You can place up to two photos at the same time (depending on the size). Leave 5 mm between photos.

You can place photos of different sizes at the same time. The photos should be larger than 30×40mm.

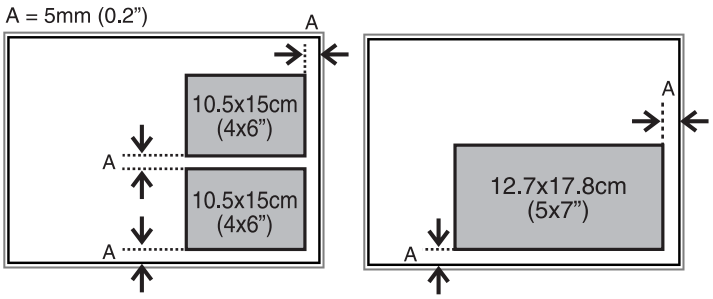

❏ To copy a CD/DVD label, place the CD/DVD in the center of the scanner glass. If the CD/DVD is not placed exactly in the center, the positioning is automatically adjusted.

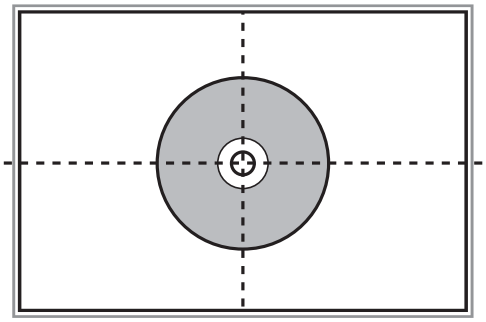

❏ If you are scanning using **Full Auto Mode** or thumbnail preview in EPSON Scan, place the original 4.5 mm away from the corner mark of the scanner glass.

Place multiple photos at least 20 mm apart from each other.

The photos should be larger than 15×15 mm.

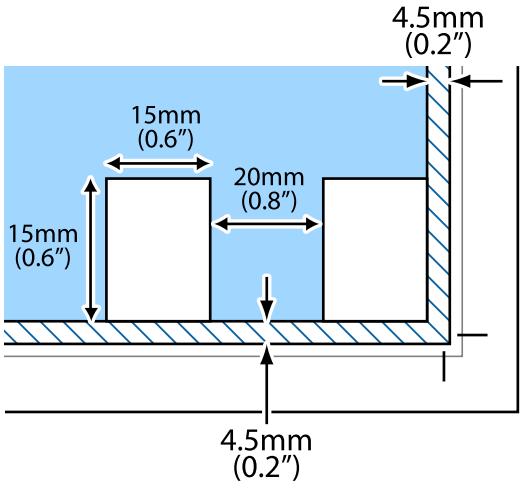

4. Close the cover gently.

Note:
Remove the originals after scanning or copying. If you leave the originals on the scanner glass for a long time, they may stick to the surface of the glass.

Inserting a Memory Card

Supported Memory Cards

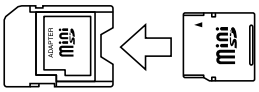	miniSD* miniSDHC* microSD* microSDHC* microSDXC*
	SD SDHC SDXC

* Attach an adapter to fit the memory card slot. Otherwise, the card may get stuck.

Related Information

➡ "Supported Memory Card Specifications" on page 155

Inserting and Removing a Memory Card

1. Insert a memory card into the printer.

   The printer starts reading the data and the light flashes. When reading is complete, the light stops flashing and remains on.

Inserting a Memory Card

> ***Important:***
> *Do not try to force the card all the way into the slot. It should not be fully inserted.*

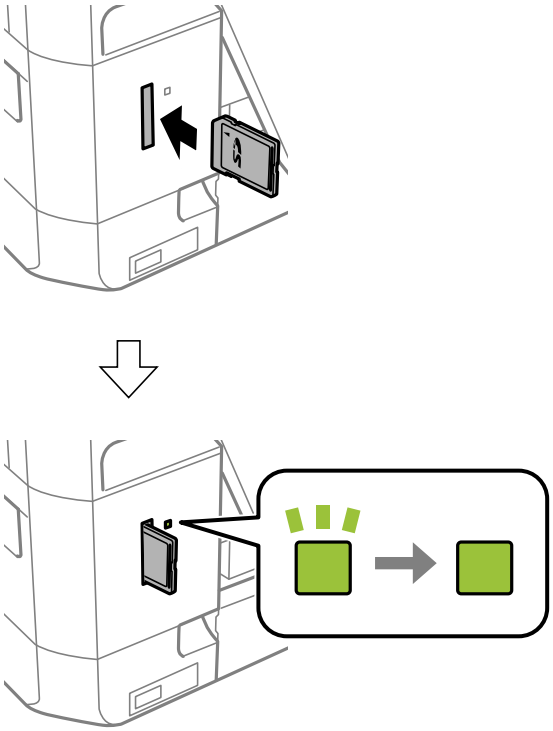

2. When you have finished using the memory card, make sure the light is not flashing, and then remove the card.

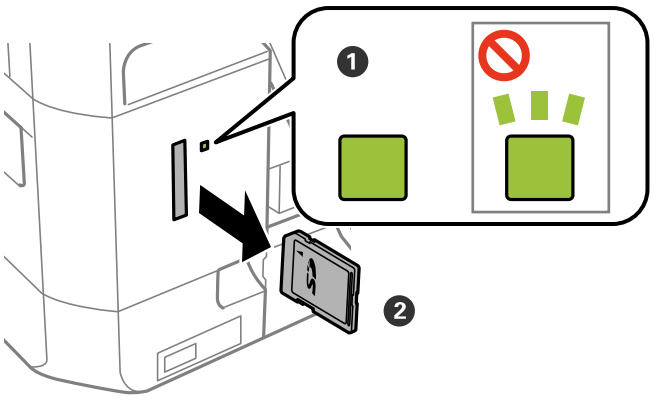

> ***Important:***
> *If you remove the memory card while the light is flashing, the data in the memory card may be lost.*

Note:
If you access the memory card from a computer, you need to operate the computer to safely remove the removable device.

Inserting a Memory Card

Related Information

➡ “Accessing a Memory Card From a Computer” on page 162

Loading a CD/DVD for Printing

Printable CD/DVDs

You can print on a circular 12-cm CD/DVD labelled as suitable for printing, for example "printable on the label surface" or "printable with ink jet printers." To print on a CD/DVD with a higher quality print surface, select **CD/DVD Premium Surface** as the **Paper Type** in the printer driver.

You can also print on Blu-ray Discs™.

CD/DVD Handling Precautions

- ❏ See the documentation provided with your CD/DVD for more information on handling the CD/DVD or writing data.
- ❏ Do not print on the CD/DVD before writing your data to it. If you do, fingerprints, dirt, or scratches on the surface may cause errors while writing data.
- ❏ Depending on the CD/DVD type or printing data, smearing may occur. Try making a test print on a spare CD/DVD. Check the printed surface after waiting for one full day.
- ❏ Compared to printing on genuine Epson paper, the print density is lowered to prevent ink from smearing on the CD/DVD. Adjust the print density as necessary.
- ❏ Allow the printed CD/DVDs at least 24 hours to dry avoiding direct sunlight. Do not stack or insert the CD/DVDs into your device until they are completely dry.
- ❏ If the printed surface is sticky even after it has dried, lower the print density.
- ❏ Reprinting on the same CD/DVD may not improve the print quality.
- ❏ If the CD/DVD tray or the internal transparent compartment are accidentally printed on, immediately wipe off the ink.
- ❏ Depending on the print area setting, the CD/DVD or CD/DVD tray may get dirty. Make settings to print on the printable area.

Related Information

➡ “Printable Area for CD/DVD” on page 154

Loading a CD/DVD

Important:

- ❏ *Before printing on the CD/DVD, see the CD/DVD handling precautions.*
- ❏ *Do not insert the CD/DVD tray while the printer is operating. This may damage the printer.*
- ❏ *Do not insert the CD/DVD tray until you are instructed to do so. Otherwise, an error occurs and the CD/DVD is ejected.*
- ❏ *When the output tray is ejected, check that there is no paper on the tray, and then close it by pushing it with your hand.*

1. Press the button and select **Load CD/DVD** using the ▲ or ▼ button, and then press the OK button. Select **Yes** using the ▲ or ▼ button and press the OK button.
2. A message is displayed on the screen telling you that the printer is preparing, and then you are instructed to load a CD/DVD. Follow the instructions below to load the CD/DVD.
3. Raise the control panel.

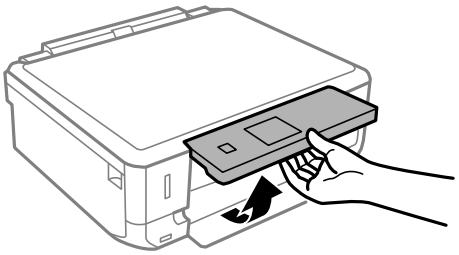

4. Close the front cover.

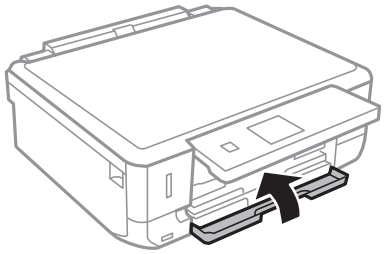

5. Remove the CD/DVD tray from the bottom of the printer

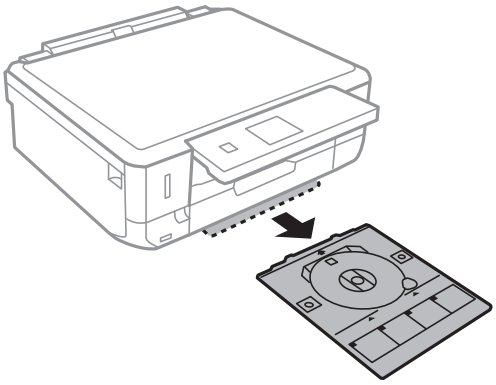

6. Place a CD/DVD on the CD/DVD tray with the printable side face-up. Press the center of the CD/DVD to securely set it on the tray.

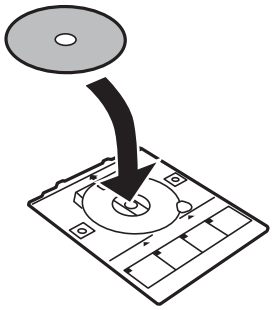

7. Insert the CD/DVD tray into the printer. Line up the alignment marks on the printer and the tray.

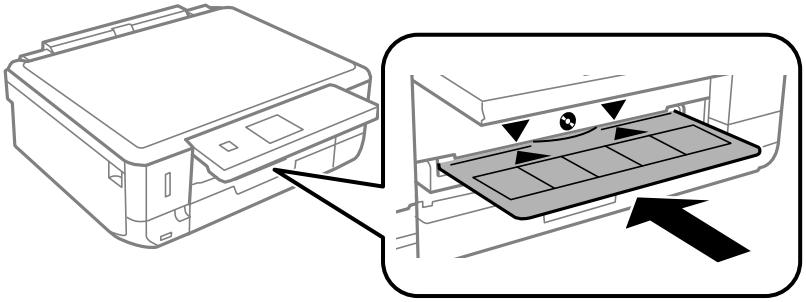

8. Press the OK button. When a message is displayed on the screen telling you that the printer is ready, press the OK button.

Related Information

- ➡ "Printable CD/DVDs" on page 36
- ➡ "CD/DVD Handling Precautions" on page 36
- ➡ "Printing Photos from a Memory Card onto a CD/DVD Label" on page 41
- ➡ "Printing a CD/DVD Label with Epson Print CD" on page 70
- ➡ "Copying on a CD/DVD Label" on page 80

Removing a CD/DVD

1. Remove the CD/DVD tray when it is ejected automatically after printing, and then remove the CD/DVD from the tray.

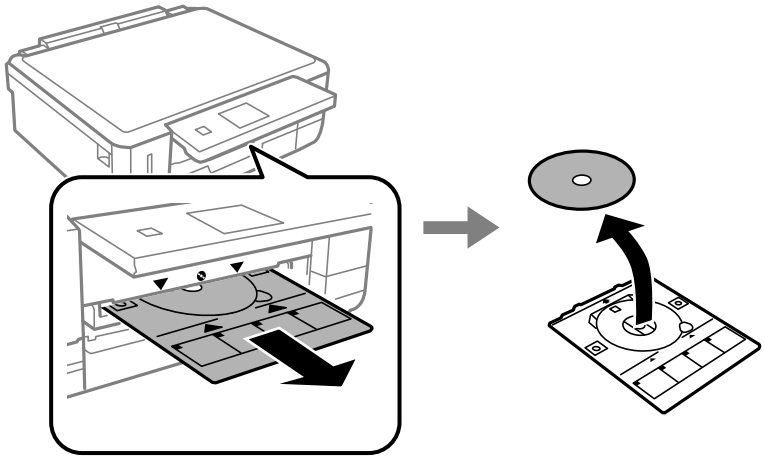

2. Insert the CD/DVD tray back into the slot on the bottom of the printer.

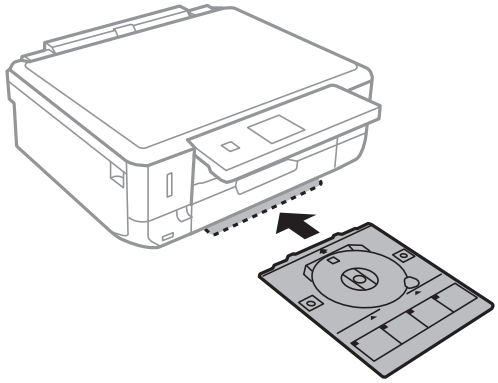

Important:

After printing is finished, make sure you remove the CD/DVD tray and store it at the bottom of the printer. If you do not remove the tray and turn the printer on or off, or run head cleaning, the CD/DVD tray will strike the print head and may cause the printer to malfunction.

Note:

*To remove the CD/DVD tray without printing, press the button, select **Eject CD/DVD Tray** > **Yes**, and then press the OK button.*

Related Information

➡ "CD/DVD Handling Precautions" on page 36

Printing

Printing from the Control Panel

Printing Photos by Selecting from a Memory Card

1. Load paper in the printer.

   > ***Important:***
   > *Make the paper settings on the control panel.*

2. Insert a memory card into the printer.

   > ***Important:***
   > *Do not remove the memory card until you have finished printing.*

   Note:
   - ❏ *Remove the memory card when printing from an external storage device such as a hard disk or USB flash memory.*
   - ❏ *If you have 1000 or more photos on your memory card, photos are automatically divided into groups containing a maximum of 999 photos and the Select Group screen is displayed. Select a group containing the photos you want to print.*

3. Enter **Print Photos** from the home screen using the ◀ or ▶ button, and then press the OK button.

4. Select a photo using the ◀ or ▶ button and set the number of copies using the – or + button. When printing more than one photo, repeat this procedure.

   Note:
   The following menus, that are displayed by pressing the ▼ button, help you select photos easily when you have many photos on your memory card.
   - ❏ *Browse: Use the **Browse by Date** menu to sort photos by date, and then select all photos of the same date at the same time.*
   - ❏ *Display Mode: Use the **9-up** menu to display nine photos on a screen.*

5. Press the ▼ button to display the menu, select **Print Settings** using the ▲ or ▼ button, and then press the OK button.

   Note:
   *Select **Crop/Zoom** if you want to crop a part of a photo. Use the ▲, ▼, ◀, or ▶ button to move the frame to the area you want to crop, and then press the – or + button to change the size of the frame. Press the ⌂ button to rotate the frame.*

6. Use the ▲ or ▼ button to select setting items such as the paper size and the paper type, and change the settings using the ◀ or ▶ button.

7. Press the ⓘ button.

Related Information

➡ "Loading Paper in the Paper Cassette 1" on page 22
➡ "Loading Paper in the Paper Cassette 2" on page 26
➡ "List of Paper Types" on page 21
➡ "Inserting a Memory Card" on page 33
➡ "Menu Options for Printing from the Control Panel" on page 48

Printing Photos from a Memory Card onto a CD/DVD Label

You can select photos stored on a memory card to print onto a CD/DVD label.

1. Insert a memory card into the printer.

> ***Important:***
> *Do not remove the memory card until you have finished printing.*

2. Press the button, select **Print on CD/DVD** using the ▲ or ▼ button, and then press the OK button.

3. Select the layout using the ◀ or ▶ button, and then press the OK button.

4. Check the screen, and then press the OK button. For **CD/DVD 4-up**, select whether to place photos automatically or manually using the ▲ or ▼ button, and then press the OK button.

5. Select the photos you want to print using the ◀ or ▶ button, set the number of copies using the – or + button, and then press the OK button. When placing photos manually for **CD/DVD 4-up**, after displaying the photo you want to print using the ◀ or ▶ button, select **Place this photo** using the ▲ or ▼ button, and then press the OK button. If you want to leave a blank space, select **Leave Blank** using the ▲ or ▼ button, and then press the OK button.

   Note:
   ❏ *The available number of copies is displayed at the top of the screen where you select the photos you want to print and the number of copies. You can select photos until 0 is indicated.*

   ❏ *Press the ▼ button, and then select **Crop/Zoom** using the ▲ or ▼ button if you want to crop a part of the photo. Use the ▲, ▼, ◀, or ▶ button to move the frame to the area you want to crop, and then press the – or + button to change the size of the frame.*

6. Check the screen, and then press the OK button.

7. Set the outer diameter using the ◀ or ▶ button, set the inner diameter using the ▲ or ▼ button, and then press the OK button.

   Note:
   You can set 114 to 120 mm as the outer diameter, and 18 to 46 mm as the inner diameter in 1 mm increments.

8. Select **Print on a CD/DVD** using the ▲ or ▼ button and press the OK button.

   Note:

   *For test printing, select **Test Print on A4 Paper** using the ▲ or ▼ button, and then load A4 plain paper in the paper cassette. You can check the printout image before printing on a CD/DVD label.*

9. A message is displayed on the screen telling you that the printer is getting ready. You are then instructed to load a CD/DVD. Press ▼ to check the instructions and load a CD/DVD.

10. Press the OK button, a message is displayed telling you that the printer is ready, and then press the OK button.

11. Press the ⊙ button.

12. When printing has finished, the CD/DVD tray is ejected. Remove the CD/DVD tray from the printer.

13. Remove the CD/DVD and store the CD/DVD tray on the bottom of the printer.

Related Information

➡ "Inserting a Memory Card" on page 33
➡ "Loading a CD/DVD" on page 37
➡ "Removing a CD/DVD" on page 39
➡ "Menu Options for Printing from the Control Panel" on page 48

Printing Photos from a Memory Card with Handwritten Notes

You can print a photo on a memory card with handwritten text or drawings. This allows you to create original cards such as New Year's cards or birthday cards.

First select a photo and print a template on plain paper. Write or draw on the template and then scan it with the printer. You can then print the photo with your own personal notes and drawings.

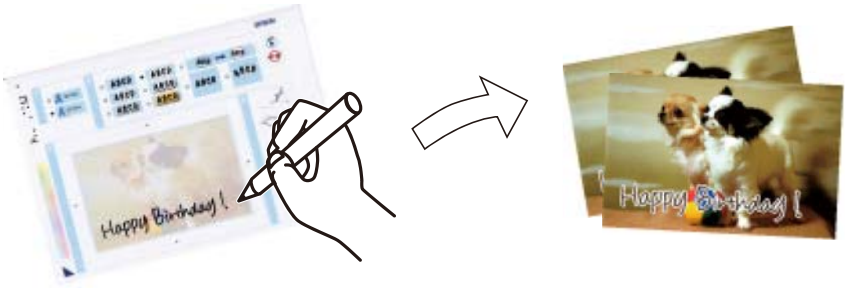

1. Insert a memory card into the printer.

   > ***Important:***
   > *Do not remove the memory card until you have finished printing.*

2. Enter **More Functions** from the home screen using the ◀ or ▶ button, and then press the OK button.

3. Select **Print Photo Greeting Card** using the ▲ or ▼ button, and then press the OK button.

4. Select **Select Photo and Print Template** using ▲ or ▼ button, and then press the OK button.
5. Select a photo using the ◀ or ▶ button, and then press the OK button.
6. Select the paper type for printing a photo with handwritten notes using the ▲ or ▼ button, and then press the OK button.
7. Select the layout using the ▲ or ▼ button, and then press the OK button.
8. Select the frame using the ▲ or ▼ button, and then press the OK button.
9. Load A4-size plain paper in paper cassette 2, and then pull out the output tray to print a template.

   Important:
   Make the paper settings on the control panel.

10. Press the ⓘ button to print a template.
11. Follow the instructions on the template to write and draw.
12. Close the output tray by hand. Load photo paper in paper cassette 1, and then pull out the output tray.

    Important:
    Make the paper settings on the control panel.

13. Select **Print Greeting Cards from Template** using the ▲ or ▼ button, and then press the OK button.
14. Check the screen, place the template on the scanner glass, and then press the OK button.

    Note:
    Make sure that the text on the template is completely dry before placing it on the scanner glass. If there are stains on the scanner glass, the stains are also printed on the photo.

15. Set the number of copies using the – or + button, and then press the ⓘ button.

Related Information

➡ "Inserting a Memory Card" on page 33
➡ "Menu Options for Printing from the Control Panel" on page 48
➡ "Loading Paper in the Paper Cassette 1" on page 22
➡ "Loading Paper in the Paper Cassette 2" on page 26
➡ "List of Paper Types" on page 21
➡ "Placing Originals on the Scanner Glass" on page 31

Printing Original Writing Paper and Calendars

You can easily print lined paper, calendars, original writing paper and greeting cards using the **Personal Stationery** menu.

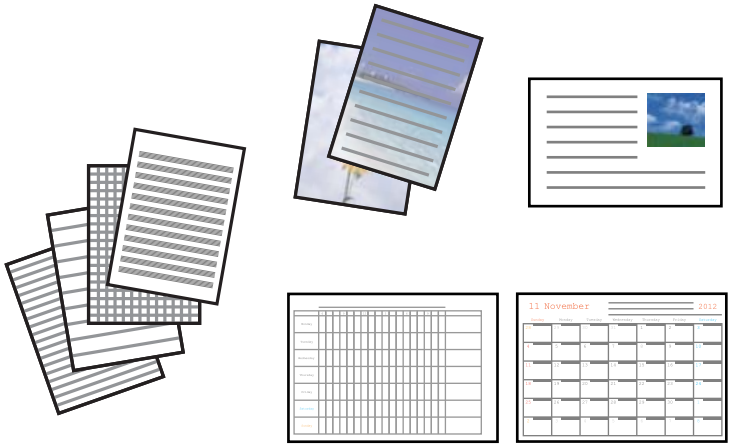

1. Load paper in the printer.

   > ***Important:***
   > *Make the paper settings on the control panel.*

2. To print writing paper and greeting cards using a photo on your memory card, insert the memory card into the printer.

3. Enter **More Functions** from the home screen using the ◀ or ▶ button, and then press the OK button.

4. Select **Personal Stationery** using the ▲ or ▼ button, and then press the OK button.

5. Select a menu item using the ▲ or ▼ button, and then press the OK button.

   Note:
   When printing greeting cards, you can add an image stored in the printer instead of using a photo on your memory card. To add an image stored in the printer, select ***Template Art****.*

6. Follow the on-screen instructions to print.

Related Information

➡ “Loading Paper in the Paper Cassette 2” on page 26
➡ “List of Paper Types” on page 21
➡ “Inserting a Memory Card” on page 33
➡ “Menu Options for Printing Original Writing Paper and Calendars” on page 45
➡ “Menu Options for Printing from the Control Panel” on page 48

Menu Options for Printing Original Writing Paper and Calendars

Lined Papers

Prints some types of lined paper, graph paper, or music paper.

Writing Papers

Prints some types of writing paper with a photo from the memory card set as the background. The photo is printed lightly so that it can be easily written on.

Calendar

Prints a weekly or monthly calender. Select the year and the month for the monthly calendar.

Message Card

Prints a greeting card using images from the printer or images on the memory card.

❏ Image Position

Select where you want to place the image on the greeting card.

❏ Line Type

Select the type of ruled line to print on the greeting card.

❏ Line Color

Select the color of the ruled line to print on the greeting card.

Printing Original Envelopes

You can create original envelopes by adding an image stored in the printer using the **Personal Stationery** menu. You can use the same image to print greeting cards that match the envelopes.

First print a diagram of an envelope on A4 size paper, and then fold it to create an envelope.

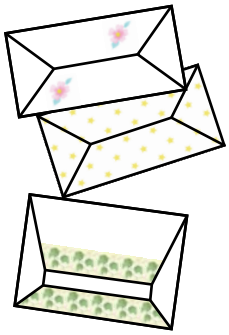

1. Enter **More Functions** from the home screen using the ◀ or ▶ button, and then press the OK button.
2. Select **Personal Stationery** using the ▲ or ▼ button, and then press the OK button.
3. Select **Origami** using the ▲ or ▼ button, and then press the OK button.
4. Select **Origami Envelope** using the ▲ or ▼ button, and then press the OK button.

5. Select the image you want to print on the envelopes using the ◀ or ▶ button, and then press the OK button.

   A screen indicating the print position of the image, and whether to print fold lines is displayed.

6. To change the image position and the fold line setting, press the ▼ button to display the setting screen and change the settings.

7. When you have finished making settings, press the ↺ button to return to the setting confirmation screen, and then press the OK button.

8. Select the size of the envelopes using the ◀ or ▶ button, and then press the OK button.

9. Load A4 plain paper in the printer, and then press the OK button.

10. Set the number of copies using the – or + button, and then press the ⓘ button.

Related Information

➡ "Loading Paper in the Paper Cassette 2" on page 26

Folding Envelopes

After printing a diagram of an envelope, print an instruction sheet that shows you how to fold the envelope, and then lay the instruction sheet on top of the diagram and fold them together.

1. Select **Origami Envelope Instruction** from the **Origami** menu, and then press the OK button.

2. Select the envelope size that you selected to print the envelope diagram using the ◀ and ▶ button, and then press the OK button.

3. Load A4 plain paper in the printer, and then press the OK button.

4. Set the number of copies using the – or + button, and then press the ⓘ button.

   The following instruction sheet is printed.

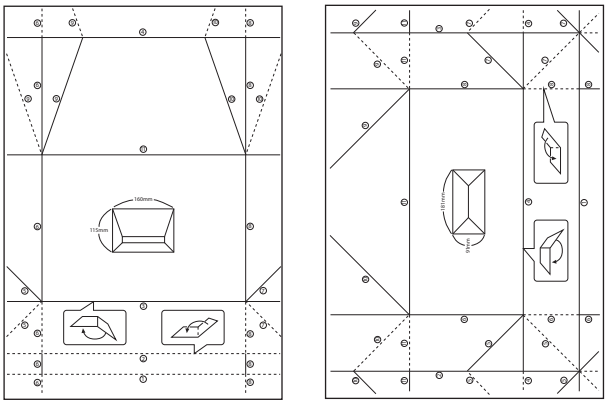

5. Lay the instruction sheet on top of the envelope diagram, and then fold them together following the instructions on the instruction sheet.

6. When finished, unfold them and remove the instruction sheet, and then fold only the envelope diagram again along its creases.

Printing Photos Using Other Features

This section introduces the other printing features available using the control panel.

Printing in Various Layouts

You can print the photos on your memory card in various layouts such as 2-up, 4-up, and upper half.



Enter **More Functions** from the home screen using the ◀ or ▶ button, and then press the OK button. Select **Photo Layout Sheet** using the ▲ or ▼ button, and then press the OK button. Follow the on-screen instructions to print.

Related Information

➡ "Menu Options for Printing from the Control Panel" on page 48

Printing a Coloring Book

You can print pictures by extracting only the outline of photos or illustrations. This allows you to create unique coloring books.



Note:
Unless they are being used for personal use (at home or other restricted areas), you need permission from the copyright holder when using copyright protected originals to create a coloring book.

Enter **More Functions** from the home screen using the ◀ or ▶ button, and then press the OK button. Select **Coloring Book** using the ▲ or ▼ button, and then press the OK button. Select whether to scan an original or use a photo on a memory card to print a coloring book, and then follow the on-screen instructions.

Related Information

➡ "Menu Options for Paper and Print Settings" on page 49

DPOF Printing

This printer is compatible with DPOF (Digital Print Order Format) Ver. 1.10. DPOF is a format that stores additional information for photos such as the date, time, user name, and printing information. DPOF-compatible cameras allow you to set which image on a memory card to print and the number of copies. When the memory card is inserted into the printer, the photos selected by the camera are printed.

Note:
For information on making print settings on your camera, see the documentation provided with your camera.

When you insert a memory card into the printer, a confirmation screen is displayed. Select **Yes** using the ▲ or ▼ button, and then press the OK button to display the print start screen. Press the ⊙ button to start printing. If you want to change the print settings, press the ▼ button. Setting items are the same as in **Print Photos** mode.

Related Information

➡ "Printing Photos by Selecting from a Memory Card" on page 40
➡ "Menu Options for Printing from the Control Panel" on page 48

Menu Options for Printing from the Control Panel

Menu Options for Selecting Photos

Browse

❏ Browse by Date

Displays the photos on the memory card sorted by date. Select a date to display all photos saved on that date.

❏ Cancel Browse

Cancels sorting photos and displays all the photos.

Select Photos

❏ Select All Photos

Selects all the photos on the memory card and sets the number of prints.

❏ Cancel Photo Selection

Returns the number of prints of all photos to 0 (zero).

Display Mode

❏ 1-up

Displays one photo on a screen. Information on settings, such as zoom, is also displayed.

❏ 1-up without Information

Displays one photo on a screen. Information on settings, such as zoom, is not displayed.

❏ 9-up

Displays nine photos on a screen.

Menu Options for Paper and Print Settings

Paper Size

Select the paper size you loaded.

Paper Type

Select the paper type you loaded.

Paper Source

Select the paper source that you want to use.

Borderless

Prints without margins around the edges. The image is enlarged a little to remove borders from the edges of the paper.

Quality

Select the print quality. Selecting **Best** provides higher quality printing, but the printing speed may be slower.

Expansion

With borderless printing, the image is enlarged a little to remove borders from the edges of the paper. Select how much to enlarge the image.

Date

Select the format used to print the date on photos for photos that include the date the photos were taken or the date they were saved. The date is not printed for some layouts.

Print Info. On Photos

❏ Off

Prints without any information.

❏ Camera Text

Prints text set on the digital camera. For information on the text settings, see the documentation provided with your camera. The information can only be printed in borderless printing on 10×15 cm, 13×18 cm, or 16:9 wide size.

❏ Landmark

Prints the name of the place or landmark where the photo was taken for digital cameras that have the landmark feature. See the website of the manufacturer of your camera for more details. The information can only be printed in borderless printing on 10×15 cm, 13×18 cm, or 16:9 wide size.

Fit Frame

If the aspect ratio of the image data and the paper size is different, the image is automatically enlarged or reduced so that the short sides match the short sides of the paper. The long side of the image is cropped if it extends beyond the long side of the paper. This feature may not work for panorama photos.

Bidirectional

Prints while the print head moves to the left and to the right. If vertical or horizontal ruled lines on your printout look blurred or misaligned, disabling this feature may solve the problem; however, doing so may reduce print speed.

CD Density

For CD/DVD printing. Set the density to use when printing onto a CD/DVD.

Density

For coloring book printing. Select the level of density for the outlines on the coloring sheet.

Line Detection

For coloring book printing. Select the sensitivity used to detect outlines in the photo.

Menu Options for Photo Adjustment and Zoom

Enhance

Select one of the image adjustment options. Select **PhotoEnhance** to produce sharper images and more vivid colors by automatically adjusting the contrast, saturation, and brightness of the original image data. Select **P.I.M.** to adjust the image by using your camera's PRINT Image Matching or Exif Print information.

Scene Detection

Available when selecting **PhotoEnhance** as the **Enhance** setting. Improves the image quality for photos of people, landscapes, and night scenes.

Fix Red-Eye

Fixes red-eye in photos. Corrections are not applied to the original file, only to the printouts. Depending on the type of photo, parts of the image other than the eyes may be corrected.

Brightness

Adjusts the brightness of the image.

Contrast

Adjusts the difference between the brightness and darkness.

Sharpness

Enhances or defocuses the outline of the image.

Saturation

Adjusts the vividness of the image.

Filter

Prints in sepia or monochrome.

Crop/Zoom

Enlarges a part of the photo to be printed.

Printing from a Computer

Printing Basics - Windows

Note:

❏ *See the online help for explanations of the setting items. Right-click an item, and then click **Help**.*

❏ *Operations differ depending on the application. See the application's help for details.*

1. Load paper in the printer.

   Important:
   Make the paper settings on the control panel.

2. Open the file you want to print.

3. Select **Print** or **Print Setup** from the **File** menu.

4. Select your printer.

5. Select **Preferences** or **Properties** to access the printer driver window.

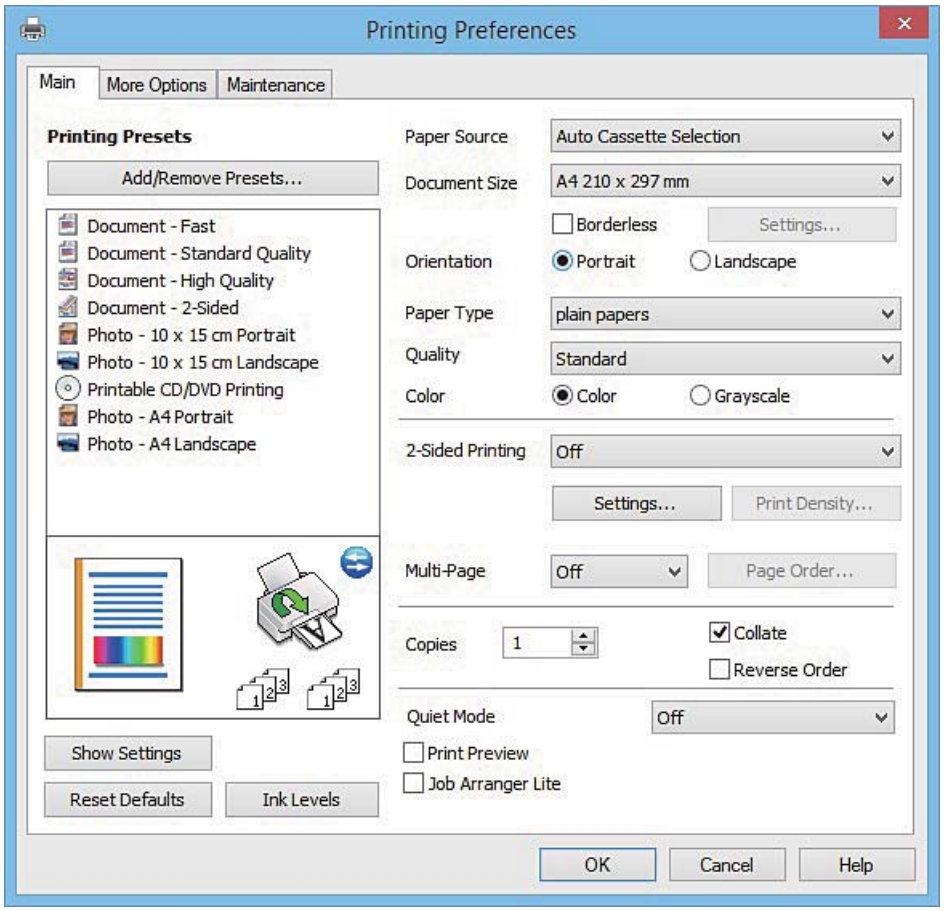

6. Make the following settings.

   ❏ Paper Source: Select the paper source in which you loaded the paper.

   ❏ Document Size: Select the paper size you loaded in the printer.

   ❏ Borderless: Select to print with no margins around the image.

   In borderless printing, the print data is enlarged slightly more than the paper size so that no margins are printed around the edges of the paper. Click **Settings** to select the amount of enlargement.

   ❏ Orientation: Select the orientation you set in the application.

   ❏ Paper Type: Select the type of paper you loaded.

   ❏ Color: Select **Grayscale** when you want to print in black or shades of gray.

   Note:
   *When printing on envelopes, select **Landscape** as the **Orientation** setting.*

7. Click **OK** to close the printer driver window.

8. Click **Print**.

Related Information

➡ "Available Paper and Capacities" on page 20

➡ "Loading Paper in the Paper Cassette 1" on page 22

➡ "Loading Paper in the Paper Cassette 2" on page 26
➡ "Guide to Windows Printer Driver" on page 118
➡ "List of Paper Types" on page 21

Printing Basics - Mac OS X

Note:
Explanations in the section use TextEdit as an example. Operations and screens differ depending on the application. See the application's help for details.

1. Load paper in the printer.

   > ***Important:***
   > *Make the paper settings on the control panel.*

2. Open the file you want to print.

3. Select **Print** from the **File** menu or another command to access the print dialog.

   If necessary, click **Show Details** or ▼ to expand the print window.

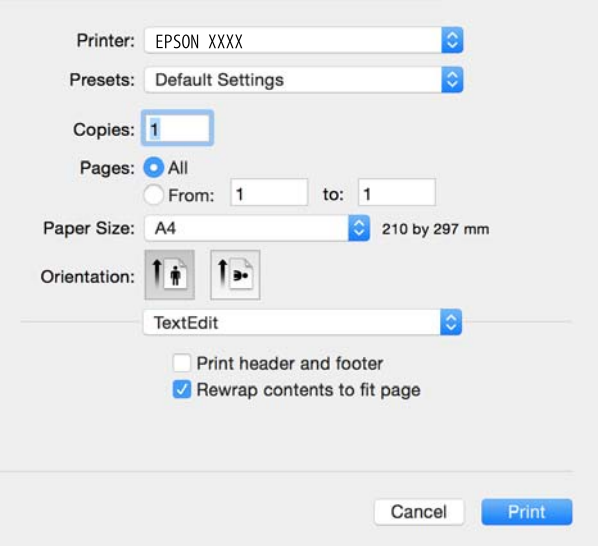

4. Make the following settings.

   ❏ Printer: Select your printer.

   ❏ Presets: Select when you want to use the registered settings.

   ❏ Paper Size: Select the paper size you loaded in the printer.
   When printing with no margins, select a "borderless" paper size.

   ❏ Orientation: Select the orientation you set in the application.

   Note:
   ❏ *If the above setting menus are not displayed, close the print window, select **Page Setup** from the **File** menu, and then make settings.*

   ❏ *When printing on envelopes, select landscape orientation.*

5. Select **Print Settings** from the pop-up menu.

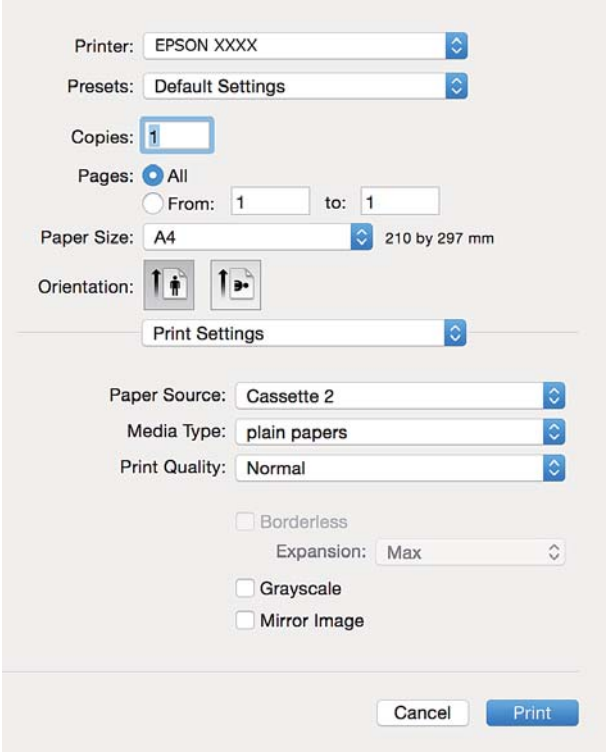

Note:
On Mac OS X v10.8.x or later, if the ***Print Settings*** *menu is not displayed, the Epson printer driver has not been installed correctly.*

Select ***System Preferences*** *from the menu >* ***Printers & Scanners*** *(or* ***Print & Scan***, ***Print & Fax****), remove the printer, and then add the printer again. See the following to add a printer.*

http://epson.sn

6. Make the following settings.

❏ Paper Source: Select the paper source in which you loaded the paper.

If you enable the **Automatic Cassette Switching** function, the printer automatically feeds paper from paper cassette 2 when paper runs out in paper cassette 1. Load the same paper (type and size) in paper cassette 1 and paper cassette 2.

To enable the **Automatic Cassette Switching** function, select **System Preferences** from the menu > **Printers & Scanners** (or **Print & Scan**, **Print & Fax**), and then select the printer. Make settings on the screen displayed by clicking **Options & Supplies** > **Options** (or **Driver**).

❏ Media Type: Select the type of paper you loaded.

❏ Expansion: Available when selecting a borderless paper size.

In borderless printing, the print data is enlarged slightly more than the paper size so that no margins are printed around the edges of the paper. Select the amount of enlargement.

❏ Grayscale: Select to print in black or shades of gray.

7. Click **Print**.

Related Information

➡ “Available Paper and Capacities” on page 20
➡ “Loading Paper in the Paper Cassette 1” on page 22
➡ “Loading Paper in the Paper Cassette 2” on page 26
➡ “Guide to Mac OS X Printer Driver” on page 122
➡ “List of Paper Types” on page 21

Printing on 2-Sides

You can use either of the following methods to print on both sides of the paper.

❏ Automatic 2-sided printing

❏ Manual 2-sided printing (for Windows only)

When the printer has finished printing the first side, flip the paper over to print on the other side.

You can also print a booklet that can be created by folding the printout. (For Windows only)

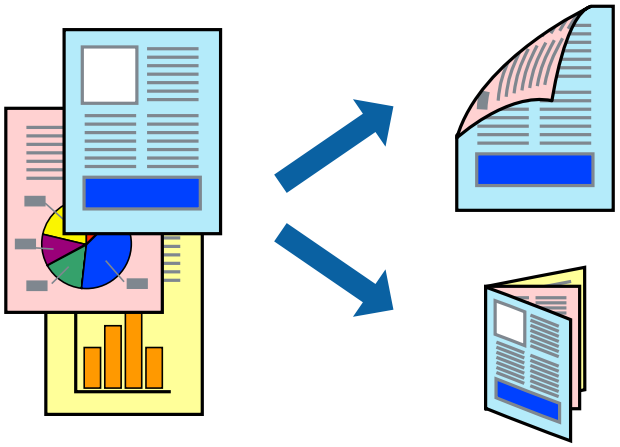

Note:

❏ *This feature is not available for borderless printing.*

❏ *If you do not use paper that is suitable for 2-sided printing, the print quality may decline and paper jams may occur.*

❏ *Depending on the paper and the data, ink may bleed through to the other side of the paper.*

Related Information

➡ “Available Paper and Capacities” on page 20

Printing on 2-Sides - Windows

Note:

❏ *Manual 2-sided printing is available when **EPSON Status Monitor 3** is enabled. If **EPSON Status Monitor 3** is disabled, access the printer driver, click **Extended Settings** on the **Maintenance** tab, and then select **Enable EPSON Status Monitor 3**.*

❏ *Manual 2-sided printing may not be available when the printer is accessed over a network or is used as a shared printer.*

1. Load paper in the printer.

2. Open the file you want to print.
3. Access the printer driver window.
4. Select **Auto (Long-edge binding)**, **Auto (Short-edge binding)**, **Manual (Long-edge binding)**, or **Manual (Short-edge binding)** from **2-Sided Printing** on the **Main** tab.
5. Click **Settings**, make the appropriate settings, and then click **OK**.

   Note:
   *To print a folded booklet, select **Booklet**.*
6. Click **Print Density**, select the document type from **Select Document Type**, and then click **OK**.

   The printer driver automatically sets the **Adjustments** options for that document type.

   Note:
   ❏ *Printing may be slow depending on the combination of options selected for **Select Document Type** in the **Print Density Adjustment** window and for **Quality** on the **Main** tab.*

   ❏ *For manual 2-sided printing, the **Print Density Adjustment** setting is not available.*
7. Set the other items on the **Main** and **More Options** tabs as necessary, and then click **OK**.
8. Click **Print**.

   For manual 2-sided printing, when the first side has finished printing, a pop-up window is displayed on the computer. Follow the on-screen instructions.

Related Information

➡ "Loading Paper in the Paper Cassette 1" on page 22
➡ "Loading Paper in the Paper Cassette 2" on page 26
➡ "Printing Basics - Windows" on page 51

Printing on 2-Sides - Mac OS X

1. Load paper in the printer.
2. Open the file you want to print.
3. Access the print dialog.
4. Select **Two-sided Printing Settings** from the pop-up menu.
5. Select the bindings in **Two-sided Printing**.
6. Select the type of original in **Document Type**.

   Note:
   ❏ *Printing may be slow depending on the **Document Type** setting.*

   ❏ *If you are printing high-density data such as photos or graphs, select **Text with Photo** or **Photo** as the **Document Type** setting. If scuffing occurs or the image bleeds through to the reverse side, adjust the print density and ink drying time by clicking the arrow mark next to **Adjustments**.*
7. Set the other items as necessary.

8. Click **Print**.

Related Information

➡ "Loading Paper in the Paper Cassette 1" on page 22
➡ "Loading Paper in the Paper Cassette 2" on page 26
➡ "Printing Basics - Mac OS X" on page 53

Printing Several Pages on One Sheet

You can print two or four pages of data on a single sheet of paper.

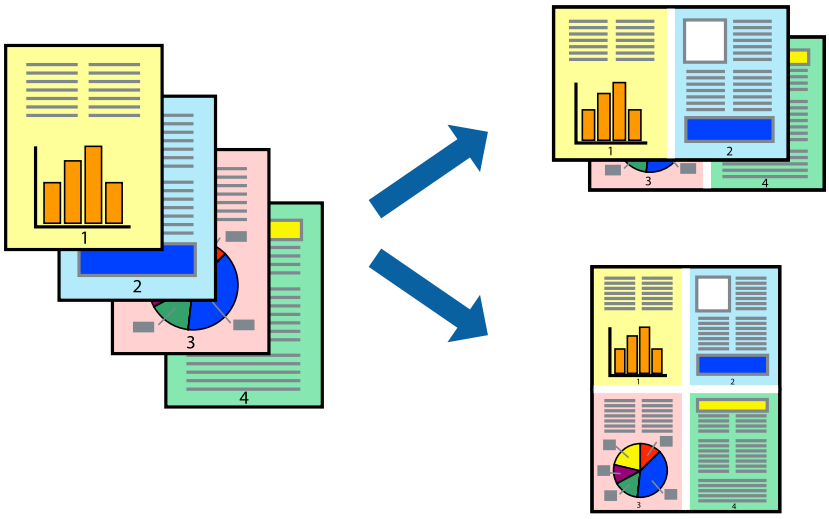

Printing Several Pages on One Sheet - Windows

Note:
This feature is not available for borderless printing.

1. Load paper in the printer.
2. Open the file you want to print.
3. Access the printer driver window.
4. Select **2-Up** or **4-Up** as the **Multi-Page** setting on the **Main** tab.
5. Click **Page Order**, make the appropriate settings, and then click **OK** to close the window.
6. Set the other items on the **Main** and **More Options** tabs as necessary, and then click **OK**.
7. Click **Print**.

Related Information

➡ "Loading Paper in the Paper Cassette 1" on page 22
➡ "Loading Paper in the Paper Cassette 2" on page 26

➡ “Printing Basics - Windows” on page 51

Printing Several Pages on One Sheet - Mac OS X

1. Load paper in the printer.
2. Open the file you want to print.
3. Access the print dialog.
4. Select **Layout** from the pop-up menu.
5. Set the number of pages in **Pages per Sheet**, the **Layout Direction** (page order), and **Border**.
6. Set the other items as necessary.
7. Click **Print**.

Related Information

➡ “Loading Paper in the Paper Cassette 1” on page 22
➡ “Loading Paper in the Paper Cassette 2” on page 26
➡ “Printing Basics - Mac OS X” on page 53

Printing to Fit the Paper Size

You can print to fit the paper size you loaded in the printer.

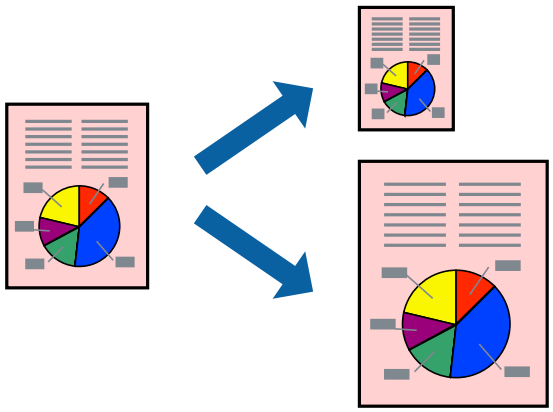

Printing to Fit the Paper Size - Windows

Note:
This feature is not available for borderless printing.

1. Load paper in the printer.
2. Open the file you want to print.

3. Access the printer driver window.
4. Make the following settings on the **More Options** tab.
   - ❏ Document Size: Select the paper size you set in the application.
   - ❏ Output Paper: Select the paper size you loaded in the printer.

     Fit to Page is selected automatically.

   Note:
   *If you want to print a reduced image at the center of the page, select **Center**.*
5. Set the other items on the **Main** and **More Options** tabs as necessary, and then click **OK**.
6. Click **Print**.

Related Information

➡ "Loading Paper in the Paper Cassette 1" on page 22
➡ "Loading Paper in the Paper Cassette 2" on page 26
➡ "Printing Basics - Windows" on page 51

Printing to Fit the Paper Size - Mac OS X

1. Load paper in the printer.
2. Open the file you want to print.
3. Access the print dialog.
4. Select the size of the paper you set in the application as the **Paper Size** setting.
5. Select **Paper Handling** from the pop-up menu.
6. Select **Scale to fit paper size**.
7. Select the paper size you loaded in the printer as the **Destination Paper Size** setting.
8. Set the other items as necessary.
9. Click **Print**.

Related Information

➡ "Loading Paper in the Paper Cassette 1" on page 22
➡ "Loading Paper in the Paper Cassette 2" on page 26
➡ "Printing Basics - Mac OS X" on page 53

Printing Multiple Files Together (for Windows Only)

Job Arranger Lite allows you to combine several files created by different applications and print them as a single print job. You can specify the print settings for combined files, such as layout, print order, and orientation.

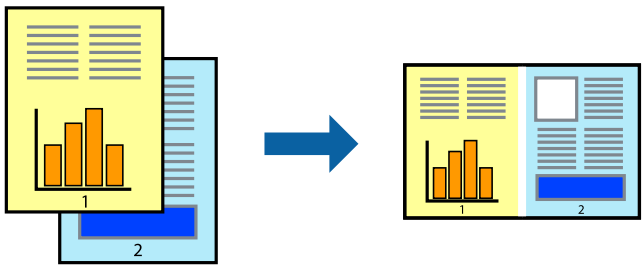

Note:
*To open a **Print Project** saved in **Job Arranger Lite**, click **Job Arranger Lite** on the printer driver's **Maintenance** tab. Next, select **Open** from the **File** menu to select the file. The extension of the saved files is "ecl".*

1. Load paper in the printer.
2. Open the file you want to print.
3. Access the printer driver window.
4. Select **Job Arranger Lite** on the **Main** tab.
5. Click **OK** to close the printer driver window.
6. Click **Print**.

   The **Job Arranger Lite** window is displayed and the print job is added to the **Print Project**.
7. With the **Job Arranger Lite** window opened, open the file that you want to combine with the current file, and then repeat steps 3 to 6.

   Note:
   *If you close the **Job Arranger Lite** window, the unsaved **Print Project** is deleted. To print later, select **Save** from the **File** menu.*
8. Select the **Layout** and **Edit** menus in **Job Arranger Lite** to edit the **Print Project** as necessary.
9. Select **Print** from the **File** menu.

Related Information

➡ “Loading Paper in the Paper Cassette 1” on page 22
➡ “Loading Paper in the Paper Cassette 2” on page 26
➡ “Printing Basics - Windows” on page 51

Printing One Image on Multiple Sheets to Create a Poster (for Windows Only)

This feature allows you to print one image on multiple sheets of paper. You can create a larger poster by taping them together.

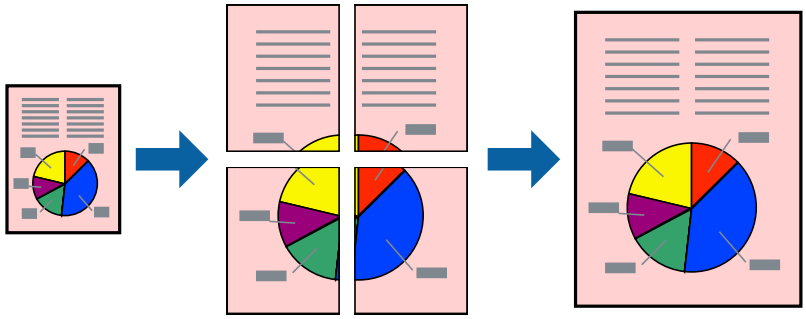

Note:
This feature is not available for borderless printing.

1. Load paper in the printer.
2. Open the file you want to print.
3. Access the printer driver window.
4. Select **2x1 Poster**, **2x2 Poster**, **3x3 Poster**, or **4x4 Poster** from **Multi-Page** on the **Main** tab.
5. Click **Settings**, make the appropriate settings, and then click **OK**.
6. Set the other items on the **Main** and **More Options** tabs as necessary, and then click **OK**.
7. Click **Print**.

Related Information

➡ “Loading Paper in the Paper Cassette 1” on page 22
➡ “Loading Paper in the Paper Cassette 2” on page 26
➡ “Printing Basics - Windows” on page 51

Making Posters Using Overlapping Alignment Marks

Here is an example of how to make a poster when **2x2 Poster** is selected, and **Overlapping Alignment Marks** is selected in **Print Cutting Guides**.

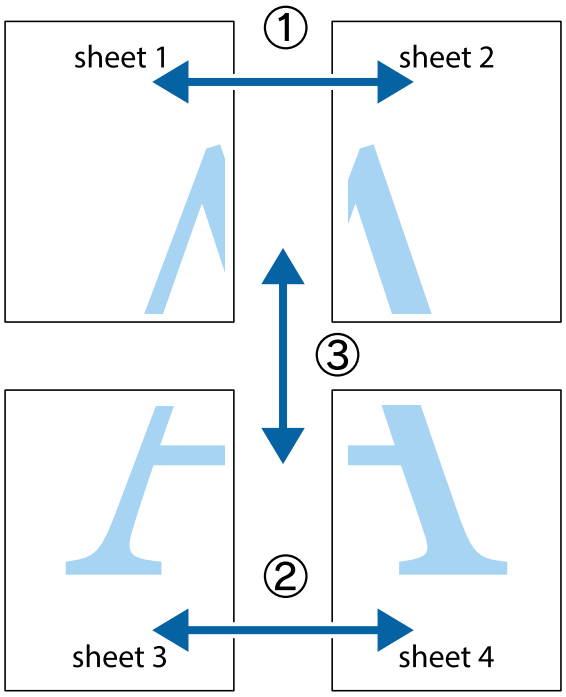

1. Prepare Sheet 1 and Sheet 2. Cut off the margins of Sheet 1 along the vertical blue line through the center of the top and bottom cross marks.

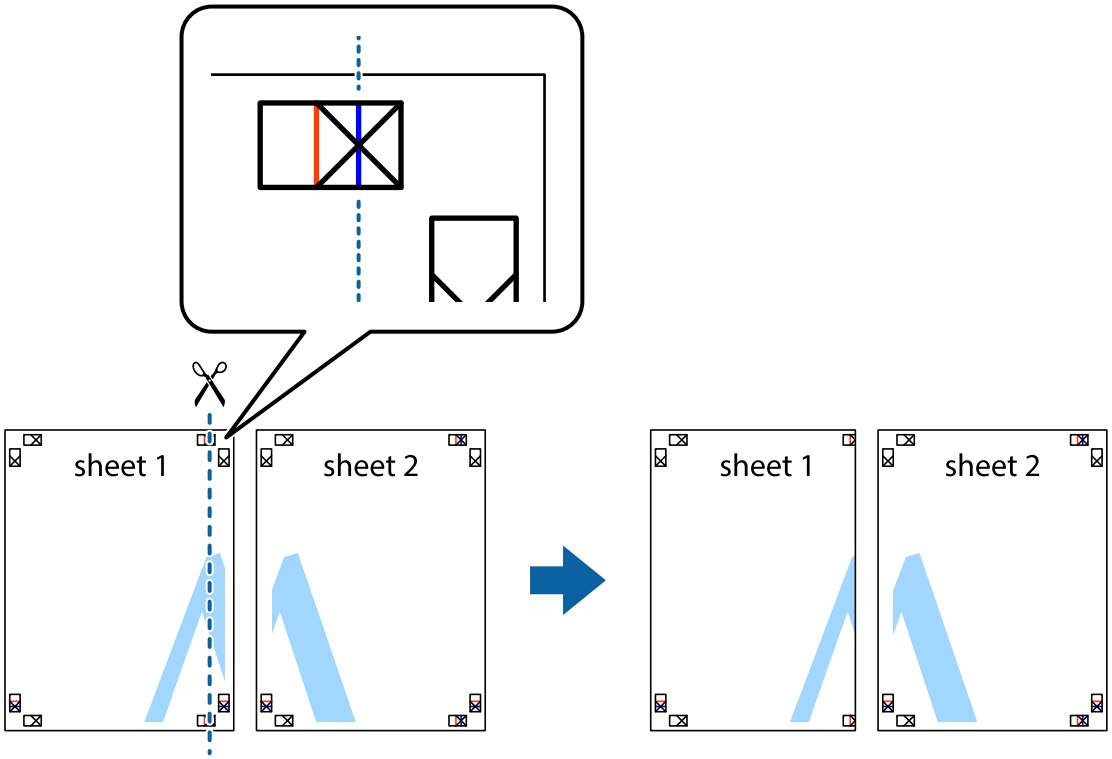

2. Place the edge of Sheet 1 on top of Sheet 2 and align the cross marks, then temporarily tape the two sheets together from the back.

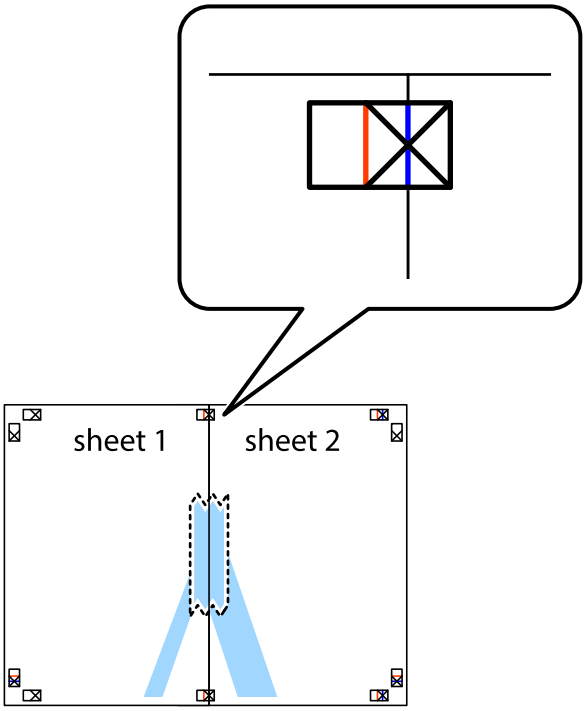

3. Cut the taped sheets in two along the vertical red line through the alignment markers (this time, the line to the left of the cross marks).

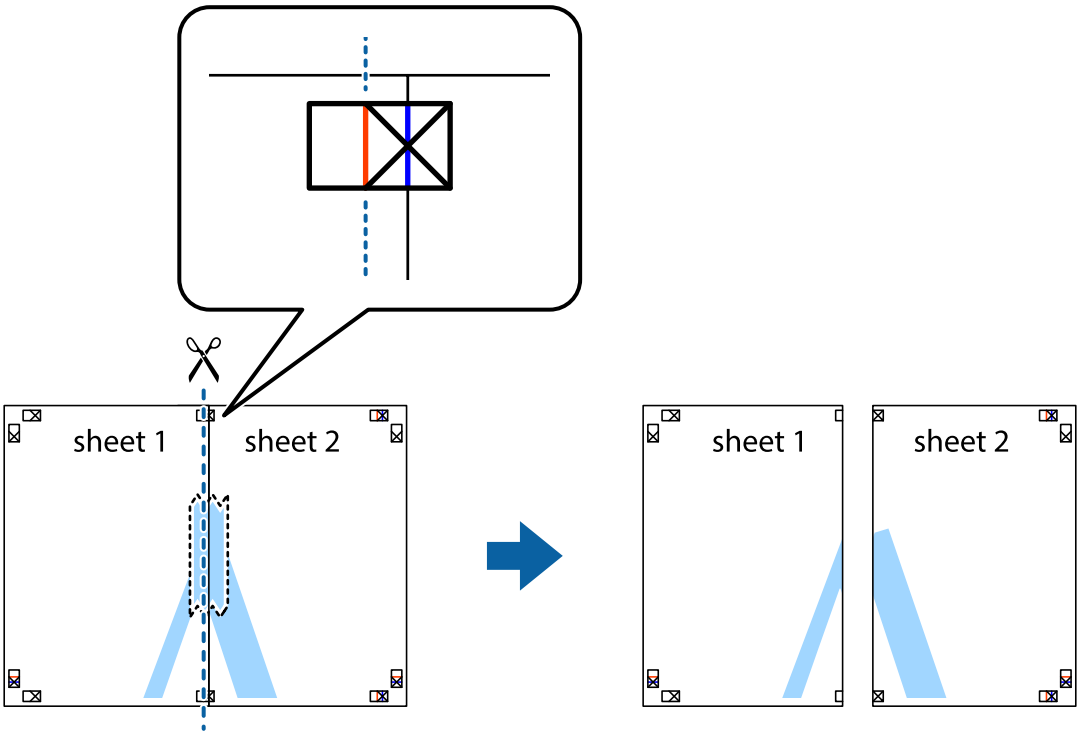

4. Tape the sheets together from the back.

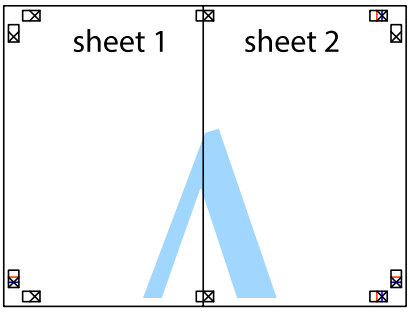

5. Repeat steps 1 to 4 to tape Sheet 3 and Sheet 4 together.

6. Cut off the margins of Sheet 1 and Sheet 2 along the horizontal blue line through the center of the left and right side cross marks.

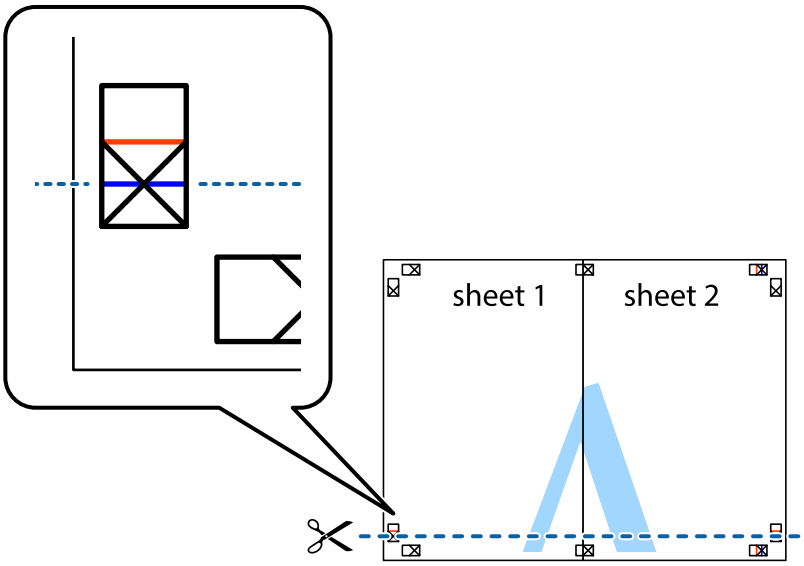

7. Place the edge of Sheet 1 and Sheet 2 on top of Sheet 3 and Sheet 4 and align the cross marks, and then temporarily tape them together from the back.

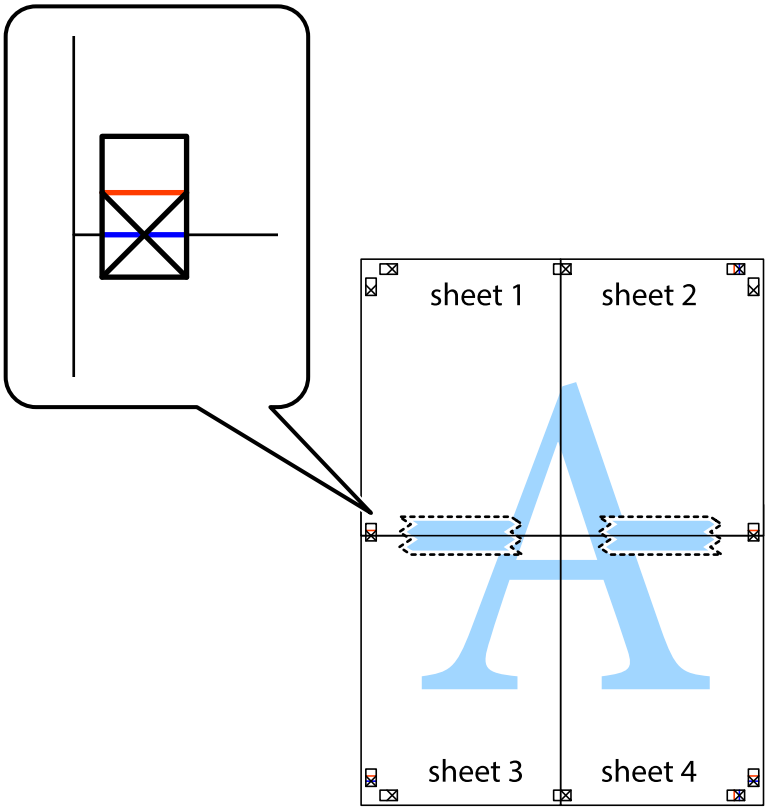

8. Cut the taped sheets in two along the horizontal red line through the alignment markers (this time, the line above the cross marks).

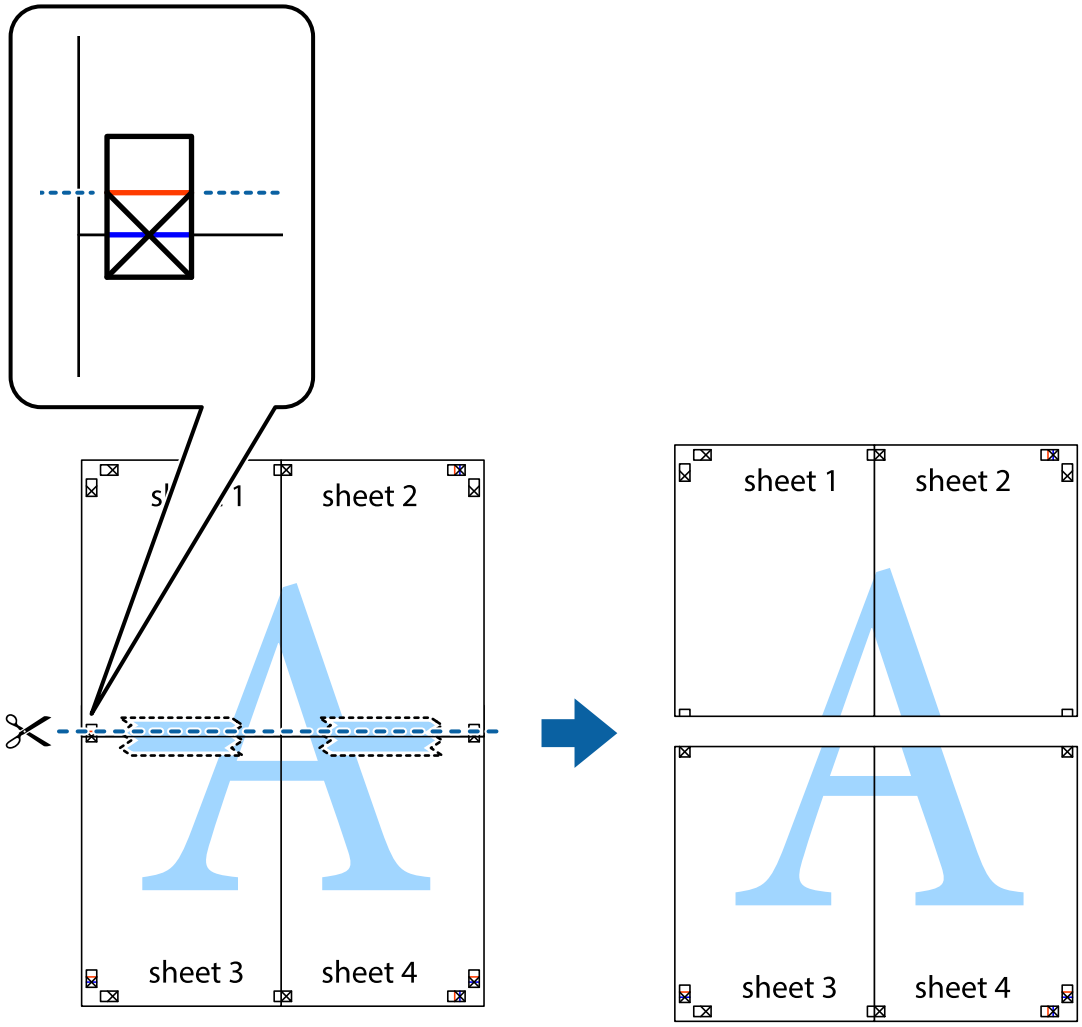

9. Tape the sheets together from the back.

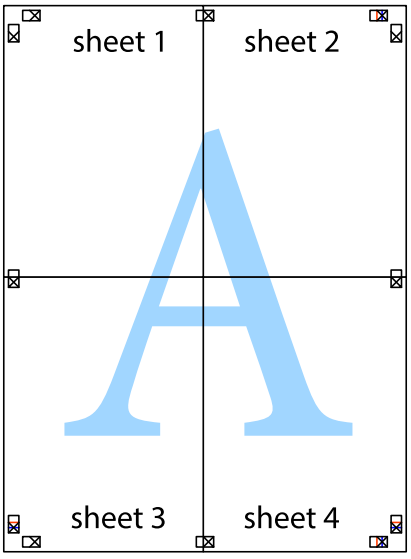

10. Cut off the remaining margins along the outer guide.

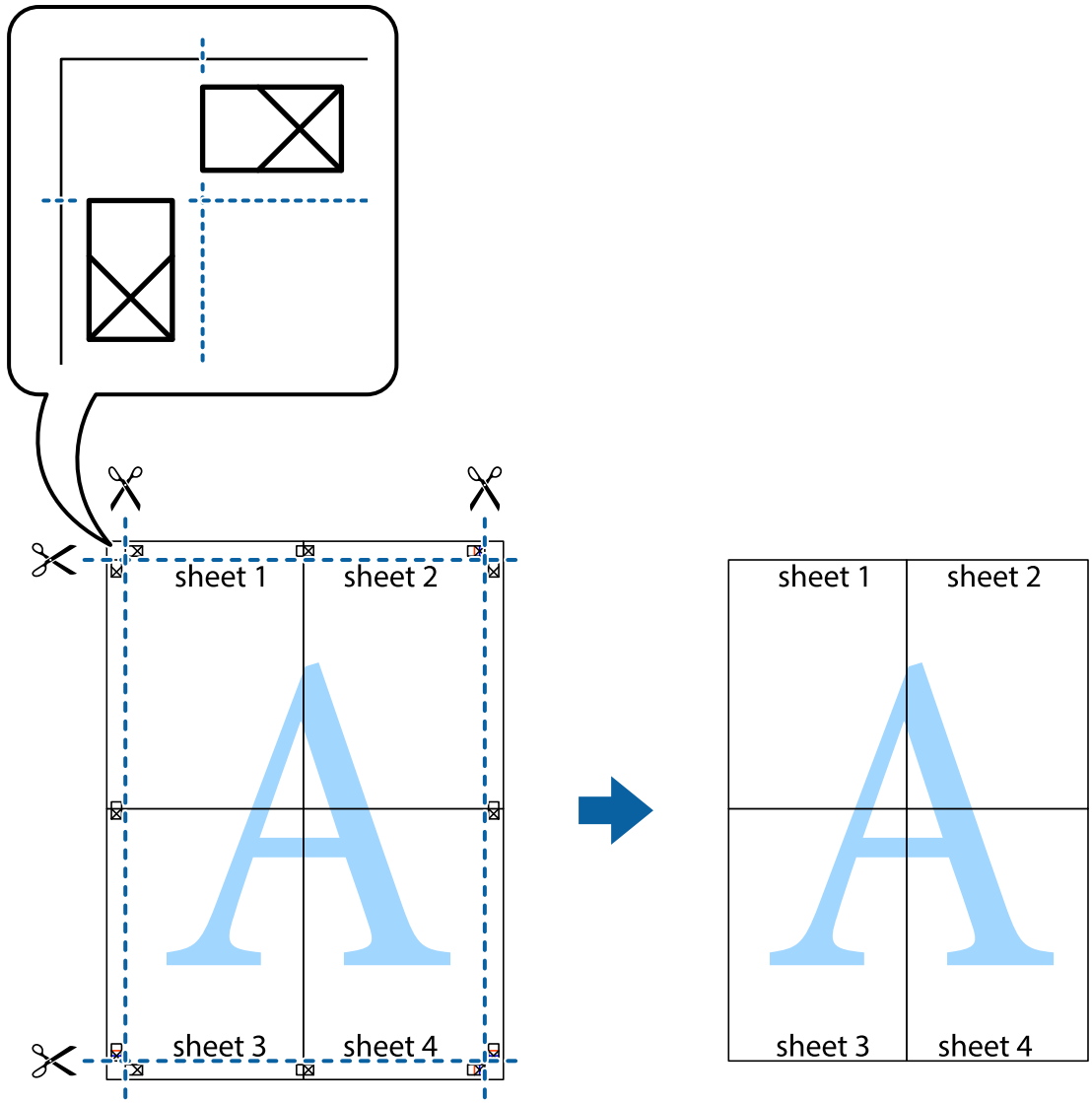

Printing Using Advanced Features

This section introduces a variety of additional layout and printing features available on the printer driver.

Related Information

➡ “Windows Printer Driver” on page 118

➡ “Mac OS X Printer Driver” on page 122

Adding a Printing Preset to Print Easily

If you create your own preset of frequently used print settings on the printer driver, you can print easily by selecting the preset from the list.

Windows

To add your own preset, set items such as the **Document Size** and **Paper Type** on the **Main** or **More Options** tab, and then click **Add/Remove Presets** in **Printing Presets**.

Note:
*To delete an added preset, click **Add/Remove Presets**, select the preset name you want to delete from the list, and then delete it.*

Mac OS X

Access the print dialog. To add your own preset, set items such as the **Paper Size** and **Media Type**, and then save the current settings as the preset in the **Presets** setting.

Note:
*To delete an added preset, click **Presets** > **Show Presets**, select the preset name you want to delete from the list, and then delete it.*

Printing a Reduced or Enlarged Document

You can reduce or enlarge the size of a document by a specific percentage.

Windows

Note:
This feature is not available for borderless printing.

Set the **Document Size** on the **More Options** tab. Select **Reduce/Enlarge Document**, **Zoom to**, and then enter a percentage.

Mac OS X

Note:
Operations differ depending on the application. See the application's help for details.

Select **Page Setup** (or **Print**) from the **File** menu. Select the printer from **Format For**, select the paper size, and then enter a percentage in **Scale**. Close the window, and then print following the basic printing instructions.

Adjusting the Print Color

You can adjust the colors used in the print job.

PhotoEnhance produces sharper images and more vivid colors by automatically adjusting the contrast, saturation, and brightness of the original image data.

Note:

- *These adjustments are not applied to the original data.*
- ***PhotoEnhance** adjusts the color by analyzing the location of the subject. Therefore, if you have changed the location of the subject by reducing, enlarging, cropping, or rotating the image, the color may change unexpectedly. Selecting the borderless setting also changes the location of the subject resulting in changes in color. If the image is out of focus, the tone may be unnatural. If the color is changed or becomes unnatural, print in a mode other than **PhotoEnhance**.*

Windows

Select the method of color correction from **Color Correction** on the **More Options** tab.

If you select **Automatic**, the colors are automatically adjusted to match the paper type and print quality settings. If you select **Custom** and click **Advanced**, you can make your own settings.

Mac OS X

Access the print dialog. Select **Color Matching** from the pop-up menu, and then select **EPSON Color Controls**. Select **Color Options** from the pop-up menu, and then select one of the available options. Click the arrow next to **Advanced Settings** and make the appropriate settings.

Printing a Watermark (for Windows Only)

You can print a watermark such as "Confidential" on your printouts. You can also add your own watermark.

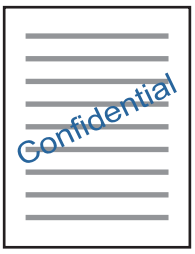

Note:
This feature is not available with borderless printing.

Click **Watermark Features** on the **More Options** tab, and then select a watermark. Click **Settings** to change details such as the density and position of the watermark.

Printing a Header and Footer (for Windows Only)

You can print information such as a user name and printing date as headers or footers.

Click **Watermark Features** in the **More Options** tab, and then select **Header/Footer**. Click **Settings** and select necessary items from the drop-down list.

Printing Photos Using Epson Easy Photo Print

Epson Easy Photo Print lets you lay out and print photos easily on various types of paper. See the application's help for details.

Note:

- *By printing on genuine Epson photo paper, the ink quality is maximized and the printouts are vivid and clear.*
- *To perform borderless printing using a commercially available application, make the following settings.*
  - *Create image data to fit the paper size. If a margin setting is available in the application you are using, set the margin to 0 mm.*
  - *Enable the borderless printing setting in the printer driver.*

Related Information

➡ "Epson Easy Photo Print" on page 125

Printing a CD/DVD Label with Epson Print CD

Epson Print CD lets you easily create and print an original design CD/DVD label. You can also create and print a CD/DVD jacket.

You can set the print range for the CD/DVD to a minimum of 18 mm for the inner diameter, and a maximum of 120 mm for the outer diameter. Depending on the settings, the CD/DVD or tray may be smeared. Set within the print range for the CD/DVD you want to print.

See the application's help for details.

Note:
When printing a CD/DVD label using a commercially available application, make the following settings.

- *For Windows, A4 is automatically selected as the **Document Size** setting when you select **CD/DVD Tray** as the **Paper Source** setting. Select **Portrait** as the **Orientation** setting, and **CD/DVD** or **CD/DVD Premium Surface** as the **Paper Type** setting.*
- *For Mac OS X, select **A4 (CD/DVD)** as the **Paper Size** setting. Select portrait as the printing direction, and then select **CD/DVD** or **CD/DVD Premium Surface** as the **Media Type** on the **Print Settings** menu.*
- *On some applications, you may need to specify the tray type. Select **Epson Tray Type 2**. The setting name may vary slightly depending on the application.*

Related Information

➡ "Epson Print CD" on page 125

Printing from Smart Devices

Using Epson iPrint

Epson iPrint is an application that allows you to print photos, documents, and web pages from a smart device such as a smartphone or tablet. You can use local print, printing from a smart device that is connected to the same wireless network as your printer, or remote print, printing from a remote location over the Internet. To use remote print, register your printer in the Epson Connect service.

Related Information

➡ "Epson Connect Service" on page 116

Installing Epson iPrint

You can install Epson iPrint on your smart device from the following URL or QR code.

http://ipr.to/a

Printing Using Epson iPrint

Start Epson iPrint from your smart device and select the item you want to use from the home screen.

The following screens are subject to change without notice.

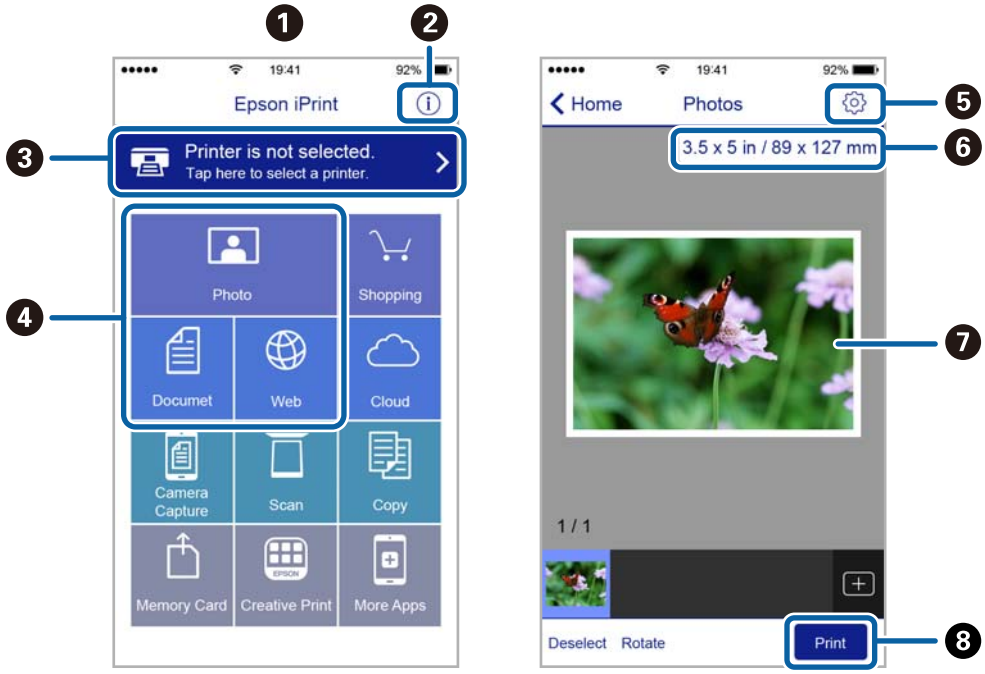

❶	Home screen displayed when the application is started.
❷	Displays information on how to setup the printer and a FAQ.
❸	Displays the screen where you can select the printer and make printer settings. Once you have selected the printer, you do not need to select it again from the next time.
❹	Select what you want to print such as photos, documents, and web pages.
❺	Displays the screen to make print settings such as paper size and paper type.
❻	Displays the paper size. When this is displayed as a button, press it to display the paper settings currently set on the printer.
❼	Displays photos and documents you selected.
❽	Starts printing.

Note:
To print from the document menu using iPhone, iPad, and iPod touch running iOS, start Epson iPrint after transferring the document you want to print using the file sharing function in iTunes.

Using AirPrint

AirPrint enables instant wireless printing from iPhone, iPad, and iPod touch with the latest version of iOS, and Mac with the latest version of OS X.



Note:
If you disabled paper configuration messages on your product control panel, you cannot use AirPrint. See the link below to enable the messages, if necessary.

1. Load paper in your product.
2. Set up your product for wireless printing. See the link below.

   http://epson.sn
3. Connect your Apple device to the same wireless network that your product is using.
4. Print from your device to your product.

   Note:
   For details, see the AirPrint page on the Apple website.

Related Information

➡ "Cannot Use AirPrint" on page 140
➡ "Loading Paper in the Paper Cassette 1" on page 22
➡ "Loading Paper in the Paper Cassette 2" on page 26

Printing from a Digital Camera

Note:

- ❏ *You can print photos directly from a PictBridge-compatible digital camera. For more details on making operations on your camera, see the documentation provided with your camera.*
- ❏ *Usually digital camera settings are given priority; however, in the following situations, the printer settings are given priority.*
  - ❏ *When the camera's print setting is set to "use printer settings"*
  - ❏ *When the **Sepia** or **B&W** option is selected in the printer's print settings.*
  - ❏ *When combining the print settings of the camera and the printer produces settings that are not available on the printer.*
- ❏ *When printing on a CD/DVD, make the print settings on the printer before selecting photos on the digital camera, and then start printing. However, depending on your digital camera, you may not be able to print photos with DPOF settings on a CD/DVD.*
- ❏ *You can print photos with DPOF settings directly from a camera.*

Printing from a Digital Camera Connected by USB Cable

You can print photos directly from a digital camera connected by USB cable.

1. Remove a memory card from the printer.
2. Load paper in the printer.
3. Enter **Setup** from the home screen using the ◀ or ▶ button, and then press the OK button. Select **External Device Setup** using the ▲ or ▼ button, and then press the OK button.
4. Select **Print Settings** or **Photo Adjustments**, press the OK button, and then change the settings if necessary. Select the setting items using the ▲ or ▼ button and change settings using the ◀ or ▶ button.
5. Turn on the digital camera, and then connect to the printer using a USB cable.

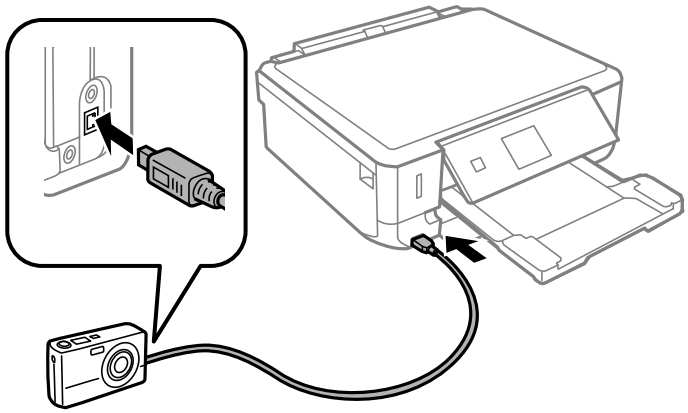

Note:
Use a USB cable that is shorter than two meters.

6. Select the photos you want to print from the digital camera, make settings such as the number of copies, and then start printing.

Related Information

➡ "Loading Paper in the Paper Cassette 1" on page 22
➡ "Loading Paper in the Paper Cassette 2" on page 26
➡ "Menu Options for Photo Adjustment and Zoom" on page 50
➡ "Menu Options for Paper and Print Settings" on page 49

Printing from a Digital Camera Connected Wirelessly

You can wirelessly print photos from digital cameras that support the DPS over IP standard (from here on referred to as PictBridge (wireless LAN)).

1. Make sure the icon that indicates that the printer is connected to a wireless network is displayed on the home screen.

   Note:
   *You can check the meaning of the icons on the control panel. Select **Help** on the home screen using the ◀ or ▶ button, and then press the OK button. Select **Icon List** using the ▲ or ▼ button, and then press the OK button.*

2. Load paper in the printer.

3. Select **Setup** from the home screen using the ◀ or ▶ button, and then press the OK button. Select **External Device Setup** using the ▲ or ▼ button, and then press the OK button.

4. Select **Print Settings** or **Photo Adjustments**, press the OK button, and then change the settings if necessary. Select the setting items using the ▲ or ▼ button and change settings using the ◀ or ▶ button.

5. Connect the digital camera to the same network as the printer.

6. Display the list of available printers on the digital camera, and then select the printer you want to connect to.

   Note:
   ❏ *To check the printer's name, select **Setup** > **Network Settings** > **Network Status** from the home screen.*
   ❏ *If your digital camera has a function that allows you to register printers, you can connect to the printer by selecting it from the next time.*

7. Select the photos you want to print from the digital camera, make settings such as the number of copies, and then start printing.

8. Disconnect the PictBridge (wireless LAN) connection to the printer from the digital camera.

   Important:
   When using PictBridge (wireless LAN), you cannot use other printer functions or print from other devices. Disconnect immediately when you have finished printing.

Related Information

➡ "Loading Paper in the Paper Cassette 1" on page 22

➡ "Loading Paper in the Paper Cassette 2" on page 26
➡ "Menu Options for Photo Adjustment and Zoom" on page 50
➡ "Menu Options for Paper and Print Settings" on page 49

Canceling Printing

Note:

❏ *In Windows, you cannot cancel a print job from the computer once it has been completely sent to the printer. In this case, cancel the print job by using the printer's control panel.*

❏ *When printing several pages from Mac OS X, you cannot cancel all of the jobs by using the control panel. In this case, cancel the print job from the computer.*

❏ *If you have sent a print job from Mac OS X v10.6.8 through the network, you may not be able to cancel printing from the computer. In this case, cancel the print job by using the printer's control panel.*

Canceling Printing - Printer Button

Press the ⓥ button to cancel the print job in progress.

Canceling Printing - Windows

1. Access the printer driver window.
2. Select the **Maintenance** tab.
3. Click **Print Queue**.
4. Right-click on the job you want to cancel and then select **Cancel**.

Related Information

➡ "Windows Printer Driver" on page 118

Canceling Printing - Mac OS X

1. Click the printer icon in the **Dock**.
2. Select the job you want to cancel.
3. Cancel the job.
   ❏ Mac OS X v10.8.x or later
   Click ⊗ next to the progress meter.
   ❏ Mac OS X v10.6.8 to v10.7.x
   Click **Delete**.

Copying

Copying Basics

1. Load paper in the printer.

   > ***Important:***
   > *Make the paper settings on the control panel.*

2. Place the originals.

3. Enter **Copy** from the home screen using the ◀ or ▶ button, and then press the OK button.

4. Set the number of copies using the – or + button.

5. Select color copy or monochrome copy using the ◀ or ▶ button.

6. Select **Paper and Copy Settings** using the ▼ button, and then press the OK button. Check the settings such as the paper size and the paper type and change the settings if necessary. Select the setting items using the ▲ or ▼ button and change the settings using the ◀ or ▶ button.

   Note:
   *If you want to copy by reducing or enlarging the size of a document by a specific percentage, select **Custom Size** as the **Reduce/Enlarge** setting, and then specify a percentage using the – or + button. You can change the percentage in increments of 5% by pressing and holding down the – or + button.*

7. Press the ⓧ button.

Related Information

➡ “Loading Paper in the Paper Cassette 1” on page 22
➡ “Loading Paper in the Paper Cassette 2” on page 26
➡ “Placing Originals on the Scanner Glass” on page 31
➡ “Menu Options for Copy Mode” on page 76

Menu Options for Copy Mode

Note:
Available menus vary depending on the layout you selected.

The number of copies

Enter the number of copies.

Color

Copies the original in color.

B&W

Copies the original in black and white (monochrome).

Density

Increase the level of density by pressing the ▶ button when the copying results are faint. Decrease the level of density by pressing the ◀ button when ink smears.

Remove Background

Detects the paper color (background color) of the original document, and removes or lightens the color. Depending on the darkness and vividness of the color, it may not be removed or lightened.

2-Sided Copying

❏ 1>1-Sided

Copies one side of an original onto a single side of paper.

❏ 1>2-Sided

Copies two single-sided originals onto both sides of a single sheet of paper.

Layout

❏ With Border

Copies with margins around the edges.

❏ Borderless

Copies without margins around the edges. The image is enlarged a little to remove margins from the edges of the paper.

❏ A4, 2-up Copy

Copies two A4 single-sided originals onto a single sheet of A4 size paper in 2-up layout.

❏ A4, Book/2-up

Copies two A4 facing pages of a book and so on onto a single sheet of A4 size paper in 2-up layout.

❏ Book/2-Sided

Copies two separate pages of a book and so on onto both sides of a single sheet of paper. This settings is only available when **1>2-Sided** is selected as the 2-sided copying setting.

Reduce/Enlarge

Enlarges or reduces the originals.

❏ Custom Size

Specifies the magnification used to enlarge or reduce the original within a range of 25 to 400%.

❏ Actual Size

Copies at 100 % magnification.

❏ Auto Fit Page

Detects the scan area and automatically enlarges or reduces the original to fit to the paper size you selected. When there are white margins around the original, the white margins from the corner mark of the scanner glass are detected as the scan area, but the margins at the opposite side may be cropped.

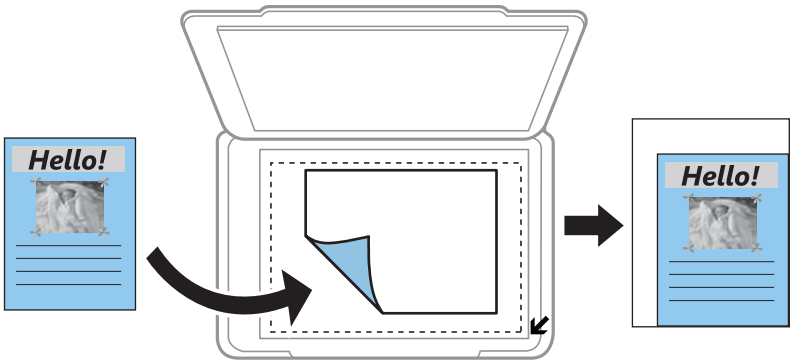

❏ 10x15cm->A4, A4->10x15cm, and so on

Automatically enlarges or reduces the original to fit to a specific paper size.

Paper Size

Select the paper size you loaded.

Paper Type

Select the paper type you loaded.

Paper Source

Select the paper source that you want to use.

Document Type

Select the type of your original.

Quality

Select the print quality. **Draft** provides faster printing, but the printouts may be faint. **Best** provides higher quality printing, but the printing speed may be slower.

For users in Belgium, the draft mode is not available.

Document Orientation

Select the orientation of your original.

Binding Margin

Select the binding position of the copies.

Expansion

With borderless copying, the image is enlarged a little to remove borders from the edges of the paper. Select how much to enlarge the image.

Dry Time

Select the drying time for 2-sided copying. Increase the level of drying time when ink smears.

Copying Photos

You can copy multiple photos at the same time. You can also restore the colors in faded photos.

Note:

❏ *The smallest size of original you can copy is 30 x 40 mm.*

❏ *White space around the photo may not be detected.*

1. Load paper in the printer.

   > ***Important:***
   > *Make the paper settings on the control panel.*

2. Enter **More Functions** from the home screen using the ◀ or ▶ button, and then press the OK button.

3. Select **Copy/Restore Photos** using the ▲ or ▼ button, and then press the OK button.

4. Select whether or not to restore the colors in faded photos using the ▲ or ▼ button, and then press the OK button.

5. Press the ▼ button to display the instructions on how to place originals, and then place the photos on the scanner glass.

6. Press the ⓘ button.

   The photos are scanned and displayed on the screen.

7. Select **Paper and Copy Settings** using the ▼ button, and then press the OK button. Check the settings such as the paper size and the paper type and change the settings if necessary. Select the setting items using the ▲ or ▼ button and change the settings using the ◀ or ▶ button.

   Note:
   *If you want to print by enlarging part of a photo, select **Crop/Zoom**, and then press the OK button. Move the print area frame using the ▲, ▼, ◀ or ▶ button, and then change the frame size using the – or + button.*

8. Press the ⓘ button.

Related Information

➡ “Loading Paper in the Paper Cassette 1” on page 22

➡ “Loading Paper in the Paper Cassette 2” on page 26

➡ “Placing Originals on the Scanner Glass” on page 31

➡ “Menu Options for Copy/Restore Photos” on page 79

Menu Options for Copy/Restore Photos

Color Restoration

Restores the color of faded photos.

Display Mode

❏ 1-up

Displays one photo on a screen. Information on settings, such as zoom, is also displayed.

❏ 1-up without Information

Displays one photo on a screen. Information on settings, such as zoom, is not displayed.

Paper and Copy Settings

❏ Paper Size

Select the paper size you loaded.

❏ Paper Type

Select the paper type you loaded.

❏ Paper Source

Select the paper source that you want to use.

❏ Borderless

To copy without margins around the edges, select **Borderless**. The image is enlarged a little to remove margins from the edges of the paper. To copy with margins around the edges, select **With Border**.

❏ Expansion

With borderless copying, the image is enlarged a little to remove borders from the edges of the paper. Select how much to enlarge the image.

Photo Adjustments

Selecting **PhotoEnhance** produces sharper images and more vivid colors by automatically adjusting the contrast, saturation, and brightness of the original image data.

Filter

Copies in monochrome.

Crop/Zoom

Enlarges a part of the photo to be copied.

Copying on a CD/DVD Label

You can copy a disc label or a square original such as a photo onto a CD/DVD label.

> ***Important:***
> *Do not load a CD/DVD into the printer until you are instructed to do so.*

1. Press the button, select **Copy to CD/DVD** using ▲ or ▼ button, and then press the OK button.

2. Place the original following the instructions displayed on the screen, and then press the OK button.

3. Follow the on-screen instructions, set the print area by specifying the outer diameter using the ◀ or ▶ button, and the inner diameter using the ▲ or ▼ button, and then press the OK button.

   Note:
   You can set 114 to 120 mm as the outer diameter, and 18 to 46 mm as the inner diameter in 1 mm increments.

4. Select **Print on a CD/DVD** using the ▲ or ▼ button, and then press the OK button.

   Note:

   *For test printing, select **Test Print on A4 Paper** using the ▲ or ▼ button, and then load A4 plain paper in the printer. You can check the printout image before printing on a CD/DVD label.*

5. A message is displayed on the screen telling you that the printer is getting ready. You are then instructed to load a CD/DVD. Press the ▼ button to check the instructions and load a CD/DVD, and then press the OK button.

6. Check the final screen for printing preparations, and then press the OK button.

7. Select color copy or monochrome copy using the ◀ or ▶ button.

8. If you want to change the settings such as copy density or printing quality, select **Paper and Copy Settings** using the ▼ button. Select the setting items using the ▲ or ▼ button and change the settings using the ◀ or ▶ button.

9. Press the ⓘ button.

10. When printing has finished, the CD/DVD tray is ejected. Remove the CD/DVD tray from the printer.

11. Remove the CD/DVD and store the CD/DVD tray on the bottom of the printer.

Related Information

➡ “Placing Originals on the Scanner Glass” on page 31
➡ “Loading a CD/DVD” on page 37
➡ “Menu Options for Copy to CD/DVD” on page 81
➡ “Removing a CD/DVD” on page 39

Menu Options for Copy to CD/DVD

Outer, Inner

Specify the print range. Up to 120 mm for the outer diameter, and a minimum of 18 mm for the inner diameter can be specified. Depending on the setting, the CD/DVD or CD/DVD tray may get dirty. Set the range to fit the printable area of your CD/DVD.

Print Type (Print on a CD/DVD or Test Print on A4 Paper)

Select whether to print on a CD/DVD or make a test print on A4 size plain paper. When you select **Test Print on A4 Paper**, you can check the print result before printing on a CD/DVD.

Color

Copies the original in color.

B&W

Copies the original in black and white (monochrome).

Density

Increase the level of density by pressing the ▶ button when the copying results are faint. Decrease the level of density by pressing the ◀ button when ink smears.

Document Type

Select the type of your original.

Quality

Select the copy quality when printing a test on A4 size plain paper. Selecting **Best** provides higher quality printing, but the printing speed may be slower.

Scanning

Scanning Using the Control Panel

Scanning to a Memory Card

You can save the scanned image to a memory card.

1. Place the originals.
2. Insert a memory card into the printer.
3. Enter **Scan** from the home screen using the ◀ or ▶ button, and then press the OK button.
4. Select **Scan to Memory Card** using the ◀ or ▶ button, and then press the OK button.
5. Check settings such as the save format, and change them if necessary. Select the setting items using the ▲ or ▼ button and change settings using the ◀ or ▶ button.
6. Press the ⓘ button.

Related Information

➡ "Inserting a Memory Card" on page 33
➡ "Placing Originals on the Scanner Glass" on page 31
➡ "Menu Options for Scanning" on page 85

Scanning to the Cloud

You can send scanned images to could services using the **Scan to Cloud** feature. Before using this feature, make settings using Epson Connect. See the following Epson Connect portal website for details.

https://www.epsonconnect.com/

http://www.epsonconnect.eu (Europe only)

1. Make sure that you have made settings using Epson Connect.
2. Place the originals.
3. Enter **Scan** from the home screen using the ◀ or ▶ button, and then press the OK button.
4. Select **Scan to Cloud** using the ◀ or ▶ button, and then press the OK button.
5. Select the destination using the ▲ or ▼ button, and then press the OK button.

6. Check settings such as the save format, and change them if necessary. Select the setting items using the ▲ or ▼ button and change settings using the ◀ or ▶ button.

7. Press the ⓕ button.

Related Information

➡ "Placing Originals on the Scanner Glass" on page 31

➡ "Menu Options for Scanning" on page 85

Scanning to a Computer

You can save the scanned image to a computer.

> ***Important:***
> *Make sure you have installed EPSON Scan and Epson Event Manager on your computer before using this feature.*

1. Place the originals.

2. Enter **Scan** from the home screen using the ◀ or ▶ button, and then press the OK button.

3. Select how to save the scanned image to a computer from the following menus using the ◀ or ▶ button, and then press the OK button.

   ❏ **Scan to Computer (JPEG)**: Saves the scanned image in JPEG format.

   ❏ **Scan to Computer (PDF)**: Saves the scanned image in PDF format.

   ❏ **Scan to Computer (Email)**: Starts the email client on your computer, and then automatically attaches it to an email.

4. Select the computer to which you want to save the scanned images.

   Note:

   ❏ *You can change to frequently-used scan settings such as the document type, folder to save, or save format by using Epson Event Manager.*

   ❏ *When the printer is connected to a network, you can select the computer to which you want to save the scanned image. Up to 20 computers can be displayed on the printer's control panel.*

   ❏ *When the computer to which you want to save the scanned images is detected on the network, the initial 15 characters of the computer name are displayed on the control panel. If you set* ***Network Scan Name (Alphanumeric)*** *on Epson Event Manager, it is displayed on the control panel.*

5. Press the ⓕ button.

Related Information

➡ "Placing Originals on the Scanner Glass" on page 31

➡ "Epson Event Manager" on page 124

Scanning to a Computer (WSD)

Note:

❏ *This feature is only available for computers running Windows 8.1/Windows 8/Windows 7/Windows Vista.*

❏ *If you are using Windows 7/Windows Vista, you need to setup your computer in advance using this feature. See the Network Guide for more details.*

1. Place the originals.
2. Enter **Scan** from the home screen using the ◀ or ▶ button, and then press the OK button.
3. Select **Scan to Computer (WSD)** using the ◀ or ▶ button, and then press the OK button.
4. Select a computer.
5. Press the ⓕ button.

Related Information

➡ "Placing Originals on the Scanner Glass" on page 31

Menu Options for Scanning

The following options are available in **Scan to Memory Card** menu and **Scan to Cloud** menu.

Note:
Available options vary depending on the menu you selected.

Format

Select the format in which to save the scanned image.

Color

Select whether to scan in color or in monochrome.

Scan Area

Select the scan area. To crop the white space around the text or image when scanning, select **Auto Cropping**. To scan at the maximum area of the scanner glass, select **Max Area**. Select this setting and scan again if the edges of the scanned image are cropped when **A4** is selected.

Document

Select the type of your original.

Resolution

Select the scanning resolution.

Contrast

Select the contrast of the scanned image. Increase the level of contrast by pressing ▶ and decrease by pressing ◀.

Document Orientation

Select the orientation of your original.

Scanning from a Computer

Scan using the scanner driver "EPSON Scan". See the EPSON Scan help for an explanation of each setting item.

Scanning Basics

This section uses EPSON Scan's **Home Mode** to explain the basics of scanning. The operation work flow is the same in other scanning modes.

1. Place the originals.
2. Start EPSON Scan.

3. Select **Home Mode** from the **Mode** list.

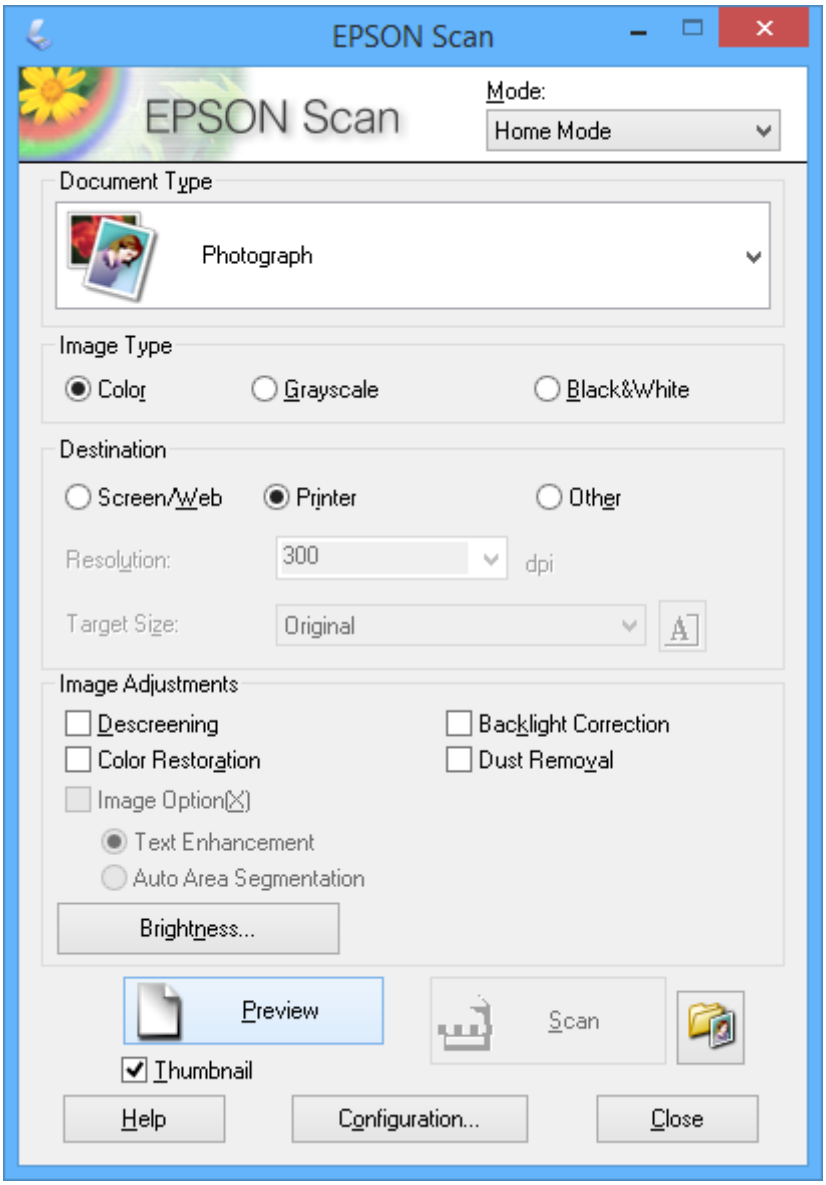

4. Make the following settings.

- ❏ **Document Type**: Select the type of the original you want to scan.
- ❏ **Image Type**: Select the color type of the image you want to scan.

  Although this is automatically selected by the **Document Type** setting, you can change the setting.
- ❏ **Destination**: Select the resolution of the image you want to scan.

  If you select **Other**, you can set **Resolution**.
- ❏ **Thumbnail**: Only available if you select **Photograph** as the Document Type setting.

  If you select this item and click **Preview**, you can scan by automatically detecting the scan area, direction, or skew of the document, or place multiple photos on the scanner glass.

5. Click **Preview**.

   Note:
   - ❏ *Depending on the photos and the scanning conditions, the scan results may not be as intended. Clear **Thumbnail**, and only place one photo.*
   - ❏ *When placing multiple photos, place them at least 20 mm (0.8 inch) apart. Also, the edge area of the scanner glass is not scanned.*

6. Adjust the quality or brightness of the image as necessary.

   Note:
   Depending on the originals, the scan results may not be as intended.

7. Click **Scan**.

8. In the **File Save Settings** screen, make appropriate settings such as the file name, location, and image format type, and then click **OK**.

   Note:
   *When **Show this dialog box before next scan** is cleared, the **File Save Settings** screen is not displayed and scanning starts immediately. To display the **File Save Settings** screen, click the (**File Save Settings**) icon to the right of **Scan** before starting to scan.*

Related Information

➡ "Placing Originals on the Scanner Glass" on page 31

➡ "EPSON Scan (Scanner Driver)" on page 124

Scanning Using Advanced Features

Scanning by Detecting the Original Automatically (Full Auto Mode)

You can start scanning by simply placing the original and clicking **Scan**. Select **Full Auto Mode** from the **Mode** list in EPSON Scan.

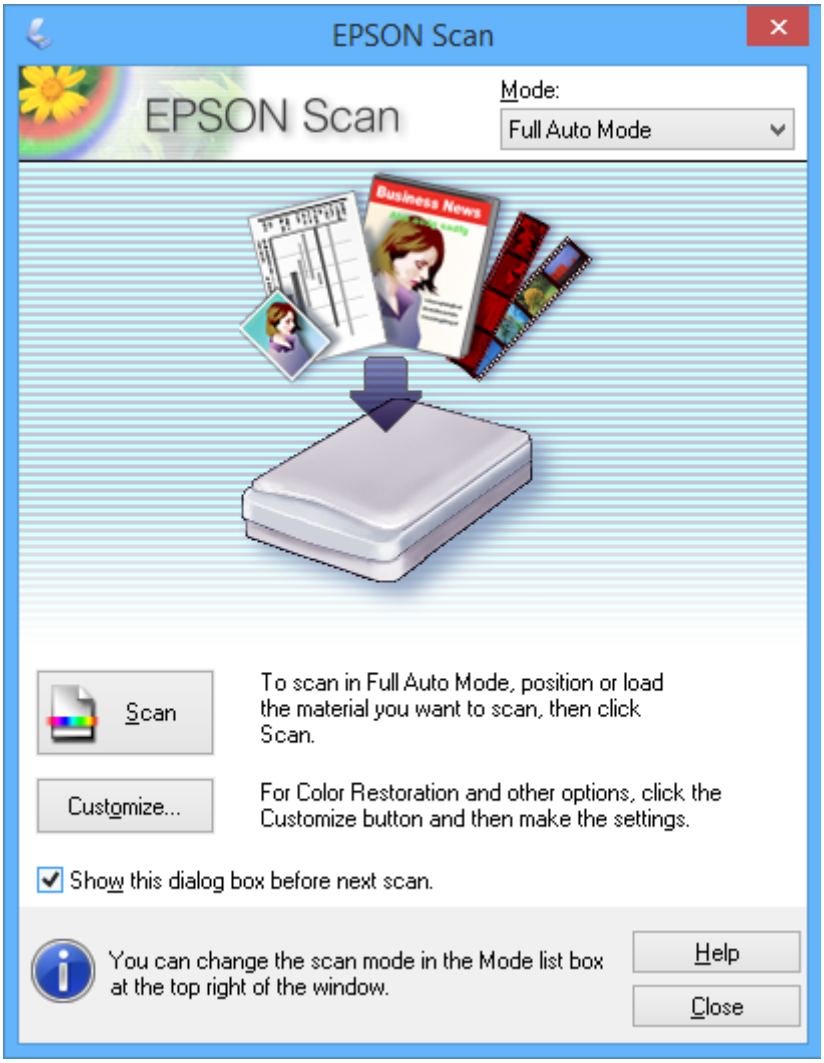

Scanning at Specified Sizes (Office Mode)

You can scan originals at the specified size without previewing the image. Select **Office Mode** from the **Mode** list in EPSON Scan.

Scanning

Note:
Office Mode *is not available for Japanese operating systems.*

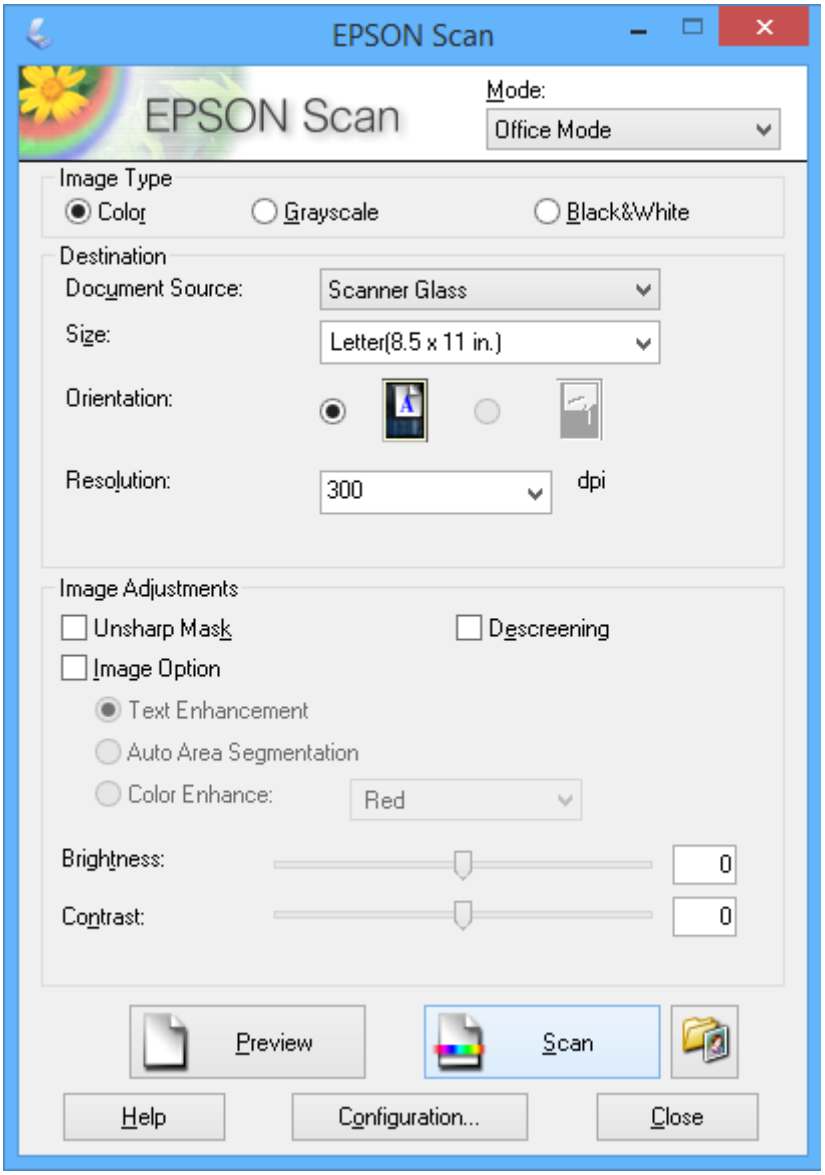

Scanning by Adjusting the Image Quality (Professional Mode)

You can scan images while adjusting the quality and color. This mode is recommended for advanced users. Select **Professional Mode** from the **Mode** list in EPSON Scan.

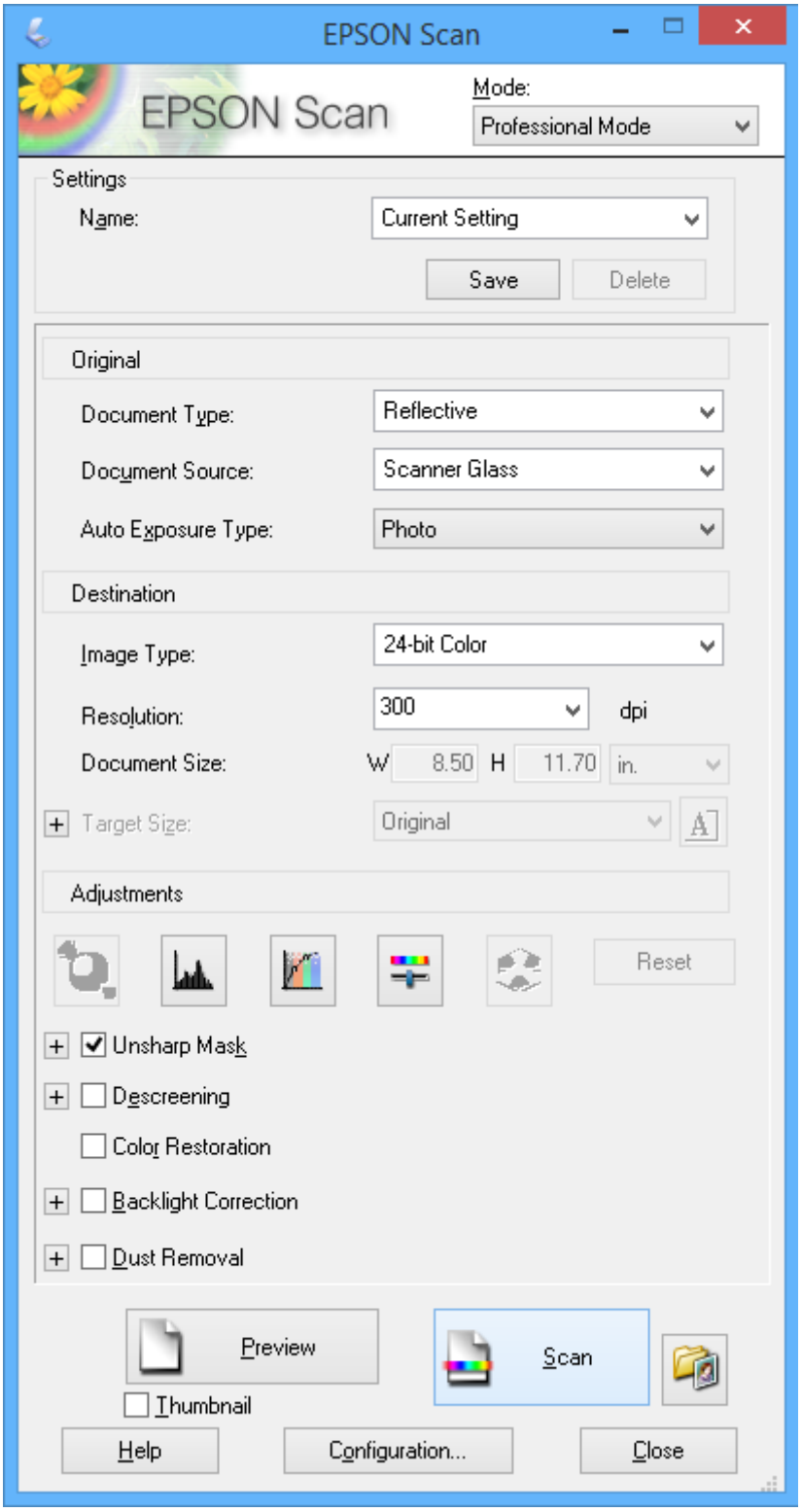

Scanning from Smart Devices

Epson iPrint is an application that allows you to scan photos and documents from a smart device, such as a smartphone or tablet, that is connected to the same wireless network as your printer. You can save the scanned data on a smart device or to Cloud services, send it by email, or print it.

Related Information

➡ "Epson Connect Service" on page 116

Installing Epson iPrint

You can install Epson iPrint on your smart device from the following URL or QR code.

http://ipr.to/a

Using Epson iPrint

Start Epson iPrint from your smart device and select the item you want to use from the home screen.

The following screens are subject to change without notice.

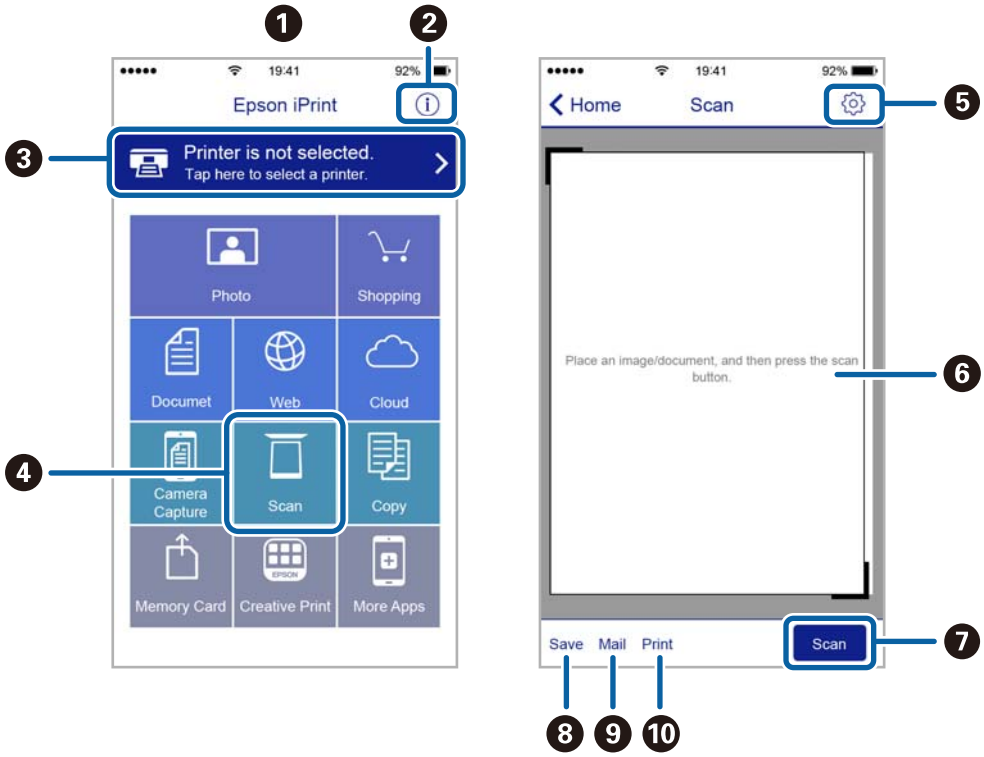

Scanning

❶	Home screen displayed when the application is started.
❷	Displays information on how to setup the printer and a FAQ.
❸	Displays the screen where you can select the printer and make printer settings. Once you have selected the printer, you do not need to select it again from the next time.
❹	Displays the scanning screen.
❺	Displays the screen where you can make scan settings such as resolution.
❻	Displays scanned images.
❼	Starts scanning.
❽	Displays the screen where you can save scanned data to a smart device or Cloud services.
❾	Displays the screen where you can send scanned data by email.
❿	Displays the screen where you can print scanned data.

Replacing Ink Cartridges

Checking the Ink Levels

You can check the approximate ink levels from the control panel or the computer.

Checking the Ink Levels - Control Panel

1. Enter **Setup** from the home screen using the ◀ or ▶ button, and then press the OK button.
2. Select **Ink Levels** using the ▲ or ▼ button, and then press the OK button.

Checking the Ink Levels - Windows

1. Access the printer driver window.
2. Click **Ink Levels** on the **Main** tab.

   Note:
   *If **EPSON Status Monitor 3** is disabled, the ink levels are not displayed. Click **Extended Settings** on the **Maintenance** tab, and then select **Enable EPSON Status Monitor 3**.*

Related Information

➡ "Windows Printer Driver" on page 118

Checking the Ink Levels - Mac OS X

1. Select **System Preferences** from the menu > **Printers & Scanners** (or **Print & Scan**, **Print & Fax**), and then select the printer.
2. Click **Options & Supplies** > **Utility** > **Open Printer Utility**.
3. Click **EPSON Status Monitor**.

Ink Cartridge Codes

Epson recommends the use of genuine Epson ink cartridges. Epson cannot guarantee the quality or reliability of non-genuine ink. The use of non-genuine ink may cause damage that is not covered by Epson's warranties, and under certain circumstances, may cause erratic printer behavior. Information about non-genuine ink levels may not be displayed.

The following are the codes for genuine Epson ink cartridges.

Icon	BK (Black)	PBK (Photo Black)	C (Cyan)	M (Magenta)	Y (Yellow)
Oranges 	33 33XL*	33 33XL*	33 33XL*	33 33XL*	33 33XL*

* "XL" indicates a large cartridge.

Note:

❏ *Not all cartridges are available in all regions.*

❏ *For users in Europe, visit the following website for information on Epson's ink cartridge yields.*
http://www.epson.eu/pageyield

For Australia and New Zealand

BK (Black)	PBK (Photo Black)	C (Cyan)	M (Magenta)	Y (Yellow)
410 410XL*	410 410XL*	410 410XL*	410 410XL*	410 410XL*

* "XL" indicates a large cartridge.

Note:

Not all cartridges are available in all regions.

Ink Cartridge Handling Precautions

Read the following instructions before replacing ink cartridges.

Handling precautions

❏ Store ink cartridges at normal room temperature and keep them away from direct sunlight.

❏ Epson recommends using the ink cartridge before the date printed on the package.

❏ For best results, use up ink cartridge within six months of opening the package.

❏ For best results, store ink cartridge packages with their bottom down.

❏ After bringing an ink cartridge inside from a cold storage site, allow it to warm up at room temperature for at least three hours before using it.

❏ Do not open the ink cartridge package until you are ready to install it in the printer. The cartridge is vacuum packed to maintain its reliability. If you leave a cartridge unpacked for a long time before using it, normal printing may not be possible.

Replacing Ink Cartridges

❏ Do not touch the sections shown in the illustration. Doing so may prevent normal operation and printing.

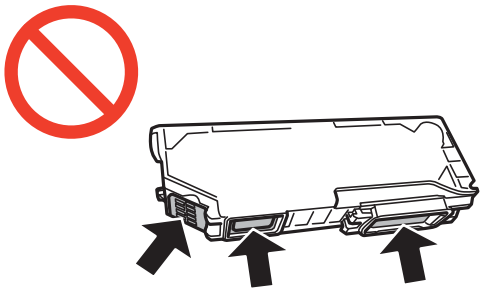

❏ Install all ink cartridges; otherwise you cannot print.

❏ Do not replace ink cartridges with the power off. Do not move the print head by hand; otherwise, you may damage the printer.

❏ After installing the ink cartridge, the power light continues to flash while the printer is charging ink. Do not turn off the printer during ink charging. If the ink charging is incomplete, you may not be able to print.

❏ Do not leave the printer with the ink cartridges removed or do not turn off the printer during cartridge replacement. Otherwise, ink remaining in the print head nozzles will dry out and you may not be able to print.

❏ Be careful not to let dust or any objects get inside the ink cartridge holder. Anything inside the holder may adversely affect the printing results or result in an inability to print. If anything gets inside the holder, remove it carefully.

❏ If you remove the cartridge from the printer for later use or to dispose of it, make sure you put the cap back on the cartridge's ink supply port to prevent ink from drying out or to prevent surrounding areas from getting smeared by ink.

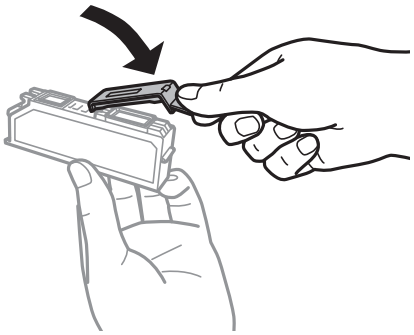

❏ This printer uses ink cartridges equipped with a green chip that monitors information such as the amount of remaining ink for each cartridge. This means that even if the cartridge is removed from the printer before it is expended, you can still use the cartridge after reinserting it back into the printer. However, when reinserting a cartridge, some ink may be consumed to guarantee printer performance.

❏ For maximum ink efficiency, only remove an ink cartridge when you are ready to replace it. Ink cartridges with low ink status may not be used when reinserted.

❏ To ensure you receive premium print quality and to help protect your print head, a variable ink safety reserve remains in the cartridge when your printer indicates to replace the cartridge. The yields quoted for you do not include this reserve.

❏ Although the ink cartridges may contain recycled materials, this does not affect printer function or performance.

❏ Specifications and appearance of the ink cartridge are subject to change without prior notice for improvement.

❏ Do not disassemble or remodel the ink cartridge, otherwise you may not be able to print normally.

❏ You cannot use the cartridges that came with the printer for the replacement.

❏ Quoted yields may vary depending on the images that you are printing, the paper type that you are using, the frequency of your prints and environmental conditions such as temperature.

❏ Finish ink cartridge replacement promptly. Do not leave the printer with the ink cartridges removed.

Ink Consumption

❏ To maintain optimum print head performance, some ink is consumed from all cartridges during maintenance operations. Ink may also be consumed when you replace ink cartridges or turn the printer on.

❏ When printing in monochrome or grayscale, color inks instead of black ink may be used depending on the paper type or print quality settings. This is because a mixture of color inks is used to create black.

❏ The ink in the ink cartridges supplied with your printer is partly used during initial setup. In order to produce high quality printouts, the print head in your printer will be fully charged with ink. This one-off process consumes a quantity of ink and therefore these cartridges may print fewer pages compared to subsequent ink cartridges.

Replacing Ink Cartridges

> ⚠ ***Caution:***
> *Be careful not to trap your hand or fingers when opening or closing the scanner unit. Otherwise you may be injured.*

> ***Important:***
> *Finish ink cartridge replacement promptly. Do not leave the printer with the ink cartridges removed.*

Note:

❏ *You can continue printing even after the printer indicates that the ink is low. However, prepare new ink cartridges as soon as possible.*

❏ *If you replace the ink cartridges while copying, the originals may move out of place. Press the ⓥ button to cancel and replace the originals.*

1. If the CD/DVD tray has been inserted, remove the tray.

2. Do one of the following.

   ❏ When prompted to replace ink cartridges

   Check which ink cartridge needs to be replaced, and then press the OK button. Select **Yes, replace now** using the ▲ or ▼ button, and then press the OK button. Remove the new ink cartridge from its package.

   ❏ When replacing ink cartridges before they are expended

   Enter **Setup** from the home screen using the ◀ or ▶ button, and then press the OK button. Select **Maintenance** using the ▲ or ▼ button, and then press the OK button. Select **Ink Cartridge(s) Replacement** using the ▲ or ▼ button, and then press the OK button. Next, remove the new ink cartridge from its package, and then press the ⓘ button.

Important:

❏ *When replacing the black ink cartridge, gently shake the new black ink cartridge four or five times and then remove it from its package. When replacing other color cartridges and the photo black cartridge, remove the new color cartridges and the photo black cartridge from their package without shaking.*

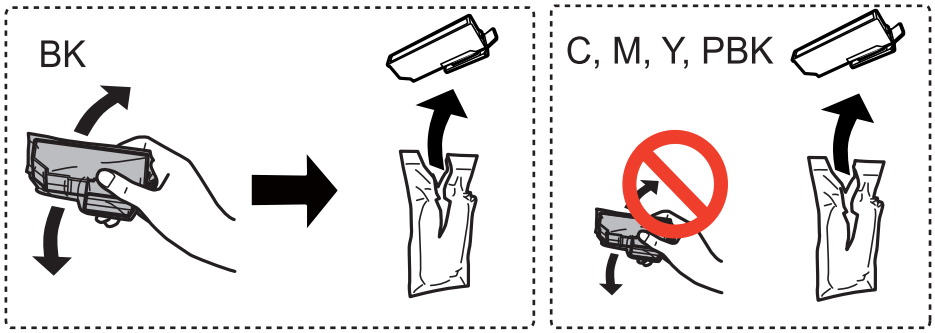

❏ *Do not shake cartridges after opening the package, as they may leak.*

3. Make sure the cap is facing up, and then remove it.

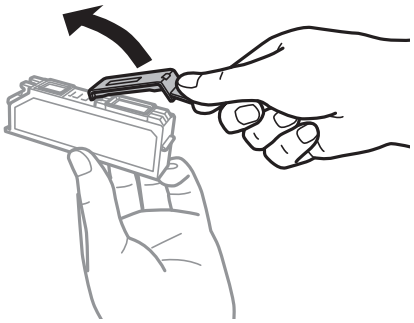

Important:

Do not touch the sections shown in the illustration. Doing so may prevent normal operation and printing.

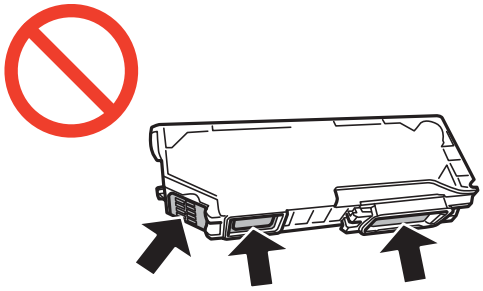

4. Open the scanner unit with the document cover closed.

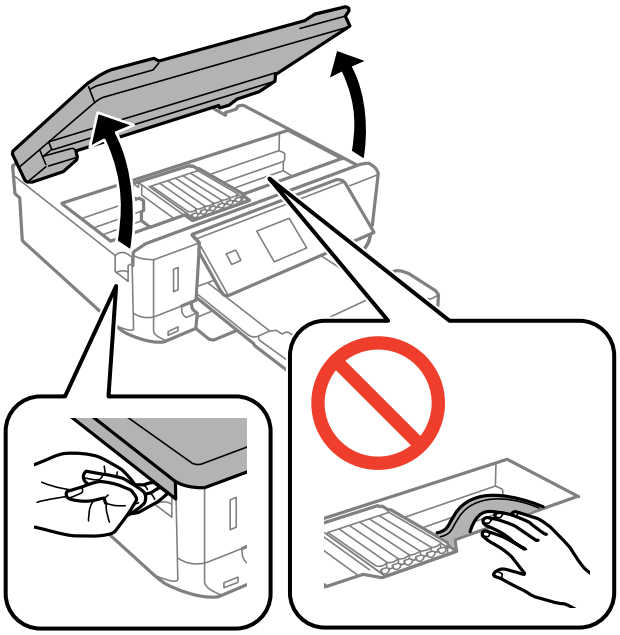

5. Push the tab to unlock the ink cartridge holder, and then remove the cartridge diagonally.

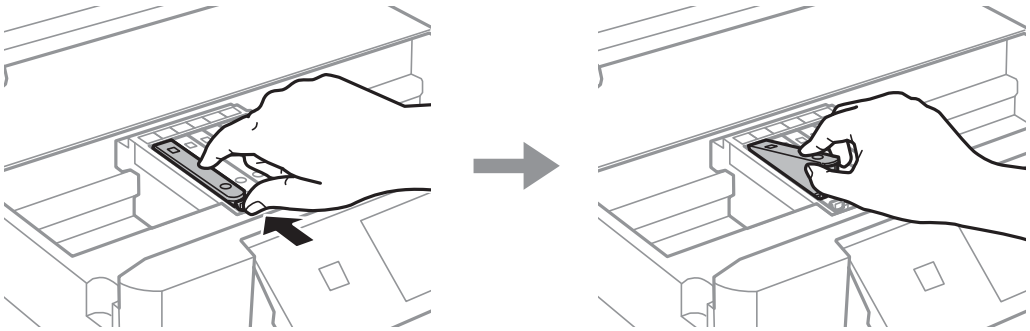

Important:

If you remove the cartridge from the printer for later use or to dispose of it, make sure you put the cap back on the cartridge's ink supply port to prevent ink from drying out or to prevent surrounding areas from getting smeared by ink.

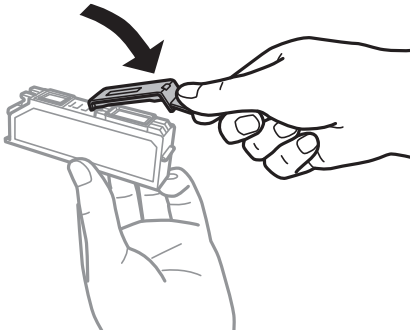

6. Insert the ink cartridge diagonally into the cartridge holder and gently push it down until it clicks into place.

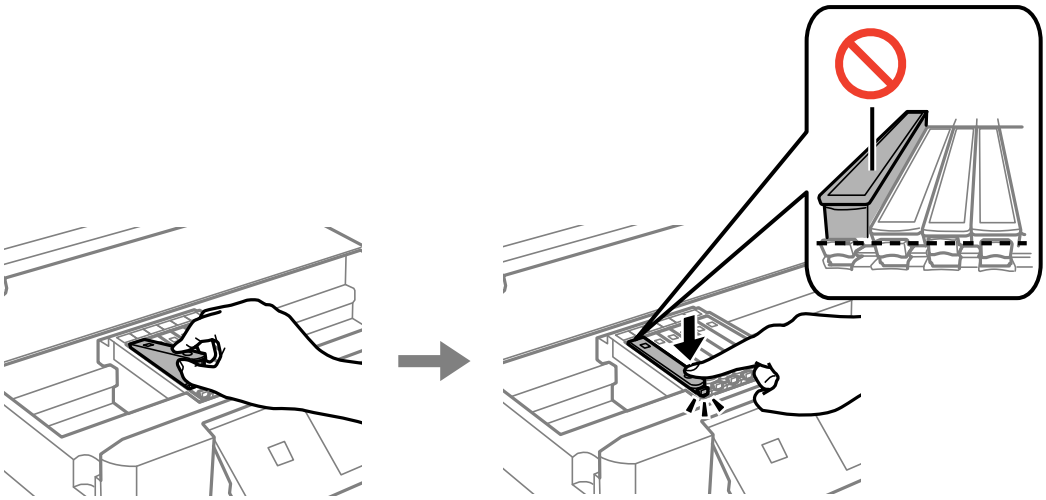

7. Close the scanner unit, and then press the ⓘ button.

8. Follow the on-screen instructions.

> ***Important:***
>
> ❏ *After installing the ink cartridge, the power light continues to flash while the printer is charging ink. Do not turn off the printer during ink charging. If the ink charging is incomplete, you may not be able to print.*
>
> ❏ *Do not insert the CD/DVD tray until ink charging is complete.*

Related Information

➡ "Ink Cartridge Codes" on page 94

➡ "Ink Cartridge Handling Precautions" on page 95

Temporarily Printing with Black Ink

When color ink or photo black ink is expended but black ink still remains while printing from a computer, you can use the following settings to continue printing for a short time using only black ink.

❏ Type of paper: plain papers, Envelope

❏ Color: **Grayscale**

❏ Borderless: Not selected

❏ EPSON Status Monitor 3: Enabled (for Windows only)

Because this feature is only available for approximately five days, replace the expended ink cartridge as soon as possible.

Note:

❏ *If **EPSON Status Monitor 3** is disabled, access the printer driver, click **Extended Settings** on the **Maintenance** tab, and then select **Enable EPSON Status Monitor 3**.*

❏ *The available period varies depending on the usage conditions.*

Temporarily Printing with Black Ink - Windows

1. When the following window is displayed, cancel printing.

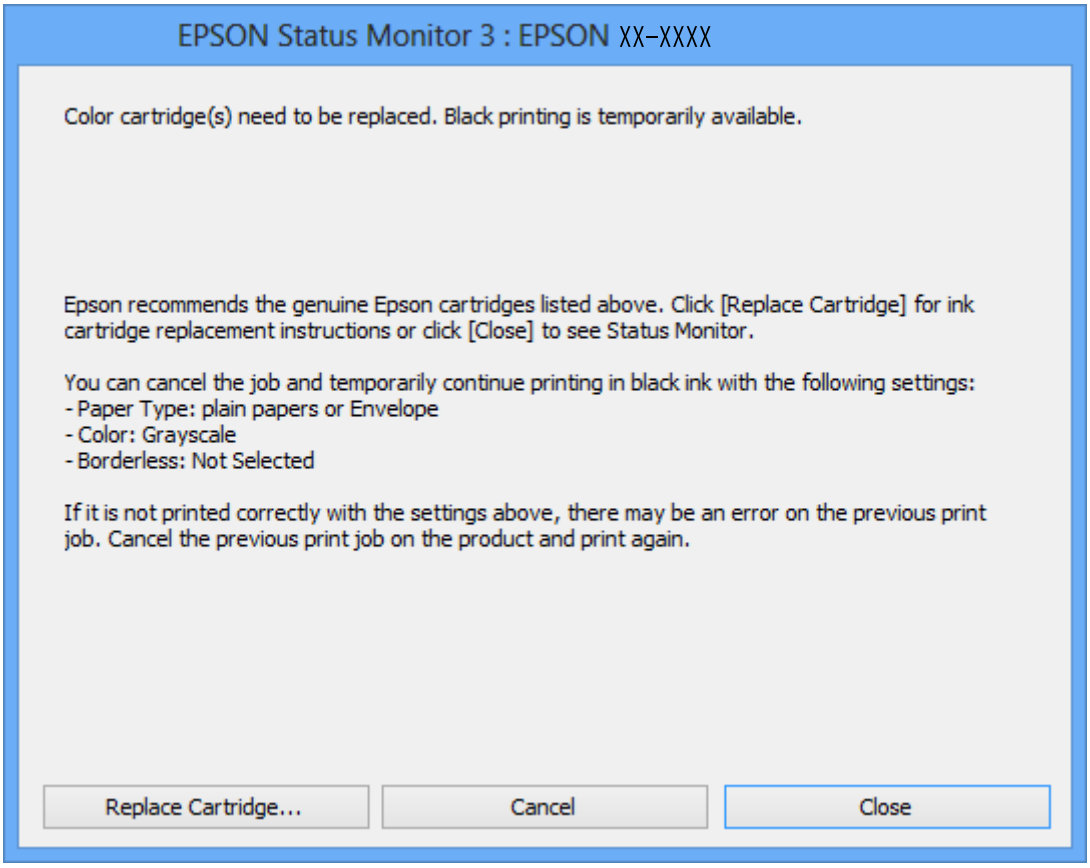



Note:
If you cannot cancel printing from the computer, cancel using the printer's control panel.

2. Access the printer driver window.
3. Clear **Borderless** on the **Main** tab.
4. Select **plain papers** or **Envelope** as the **Paper Type** setting on the **Main** tab.

5. Select **Grayscale**.
6. Set the other items on the **Main** and **More Options** tabs as necessary, and then click **OK**.
7. Click **Print**.
8. Click **Print in Black** in the window displayed.

Related Information

➡ "Loading Paper in the Paper Cassette 1" on page 22
➡ "Loading Paper in the Paper Cassette 2" on page 26
➡ "Printing Basics - Windows" on page 51

Temporarily Printing with Black Ink - Mac OS X

Note:
*To use this feature through a network, connect with **Bonjour**.*

1. Click the printer icon in the **Dock**.
2. Cancel the job.

   Note:
   If you cannot cancel printing from the computer, cancel using the printer's control panel.

3. Select **System Preferences** from the menu > **Printers & Scanners** (or **Print & Scan**, **Print & Fax**), and then select the printer. Click **Options & Supplies** > **Options** (or **Driver**).
4. Select **On** as the **Permit temporary black printing** setting.
5. Access the print dialog.
6. Select **Print Settings** from the pop-up menu.
7. Select any paper size except for a borderless size as the **Paper Size** setting.
8. Select **plain papers** or **Envelope** as the **Media Type** setting.
9. Select **Grayscale**.
10. Set the other items as necessary.
11. Click **Print**.

Related Information

➡ "Canceling Printing" on page 75
➡ "Loading Paper in the Paper Cassette 1" on page 22
➡ "Loading Paper in the Paper Cassette 2" on page 26
➡ "Printing Basics - Mac OS X" on page 53

Conserving Black Ink when the Black Ink Is Low (for Windows Only)

When black ink is running low and there is enough color ink remaining, you can use a mixture of color inks to create black. You can continue printing while preparing a replacement black ink cartridge.

This feature is only available when you select the following settings in the printer driver.

❏ Paper Type: **plain papers**

❏ Quality: **Standard**

❏ EPSON Status Monitor 3: Enabled

Note:

❏ *If **EPSON Status Monitor 3** is disabled, access the printer driver, click **Extended Settings** on the **Maintenance** tab, and then select **Enable EPSON Status Monitor 3**.*

❏ *Composite black looks slightly different from pure black. In addition, the print speed is reduced.*

❏ *To maintain the quality of the print head, black ink is also consumed.*

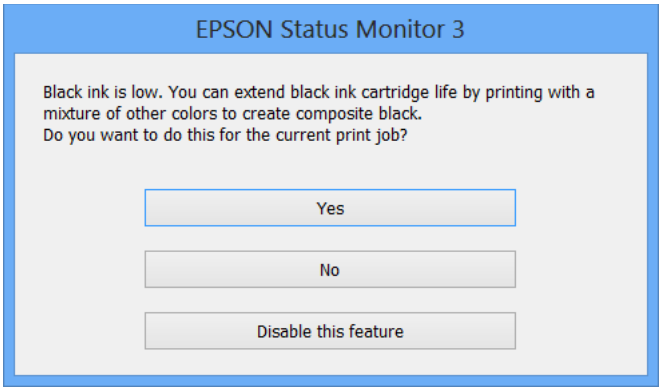

Menu	Descriptions
Yes	Select to use a mixture of color inks and photo black ink to create black. This window is displayed the next time you print a similar job.
No	Select to continue using the remaining black ink. This window is displayed the next time you print a similar job.
Disable this feature	Select to continue using the remaining black ink. This window is not displayed until you replace the black ink cartridge and it runs low again.

Maintaining the Printer

Checking and Cleaning the Print Head

If the nozzles are clogged, the printouts become faint, there is visible banding, or unexpected colors appear. When print quality has declined, use the nozzle check feature and check if the nozzles are clogged. If the nozzles are clogged, clean the print head.

> ***Important:***
> *Do not open the scanner unit or turn off the printer during head cleaning. If the head cleaning is incomplete, you may not be able to print.*

Note:

- ❏ *Because print head cleaning uses some ink, clean the print head only if quality declines.*
- ❏ *When ink is low, you may not be able to clean the print head.*
- ❏ *If print quality has not improved after repeating nozzle check and head cleaning about two times, wait for at least six hours without printing, and then run the nozzle check again and repeat the head cleaning if necessary. We recommend to turn off the printer. If print quality has still not improved, contact Epson support.*
- ❏ *To prevent the print head from drying out, always turn the printer off by pressing the ⏻ button.*
- ❏ *To keep the print head operating at its best, we recommend printing a few pages on a regular basis.*

Checking and Cleaning the Print Head - Control Panel

1. Load A4-size plain paper in the printer.
2. Enter **Setup** from the home screen using the ◀ or ▶ button, and then press the OK button.
3. Select **Maintenance** using the ▲ or ▼ button, and then press the OK button.
4. Select **Nozzle Check** using the ▲ or ▼ button, and then press the OK button.
5. Follow the on-screen instructions to print the nozzle check pattern.
6. Compare the printed check pattern with the sample shown below.
   - ❏ All lines are printed: The print head nozzles are not clogged. Select **Done** using the ▲ or ▼ button and press the OK button.

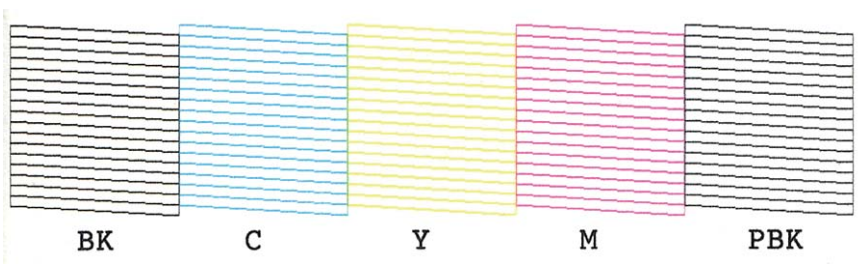

❏ There are broken lines or missing segments: The print head nozzles may be clogged. Go to the next step.

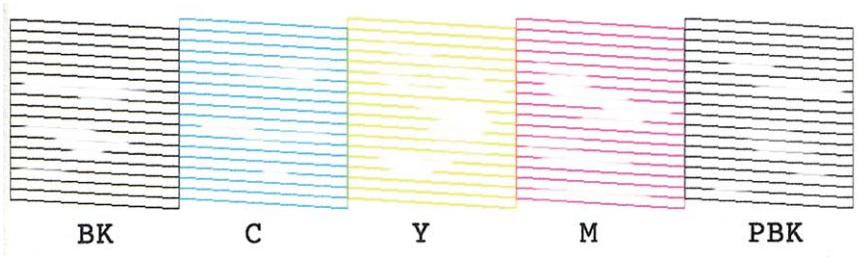

Note:
The test pattern may vary by model.

7. Select **Clean the print head** using the ▲ or ▼ button, and then press the OK button.
8. Follow the on-screen instructions to clean the print head.
9. When cleaning is finished, select **Print nozzle check pattern** using the ▲ or ▼ button, and then follow the on-screen instructions to print the nozzle check pattern again. Repeat cleaning and printing the pattern until all lines are printed completely.

Related Information

➡ "Loading Paper in the Paper Cassette 2" on page 26

Checking and Cleaning the Print Head - Windows

1. Load A4-size plain paper in the printer.
2. Access the printer driver window.
3. Click **Nozzle Check** on the **Maintenance** tab.
4. Follow the on-screen instructions.

Related Information

➡ "Loading Paper in the Paper Cassette 2" on page 26
➡ "Windows Printer Driver" on page 118

Checking and Cleaning the Print Head - Mac OS X

1. Load A4-size plain paper in the printer.
2. Select **System Preferences** from the menu > **Printers & Scanners** (or **Print & Scan**, **Print & Fax**), and then select the printer.
3. Click **Options & Supplies** > **Utility** > **Open Printer Utility**.

4. Click **Nozzle Check**.
5. Follow the on-screen instructions.

Related Information

➡ "Loading Paper in the Paper Cassette 2" on page 26

Aligning the Print Head

If you notice a misalignment of vertical lines or blurred images, align the print head.

Aligning the Print Head - Control Panel

1. Load A4-size plain paper in the printer.
2. Enter **Setup** from the home screen using the ◀ or ▶ button, and then press the OK button.
3. Select **Maintenance** using the ▲ or ▼ button, and then press the OK button.
4. Select **Print Head Alignment** using the ▲ or ▼ button, and then press the OK button.
5. Follow the on-screen instructions to print the alignment pattern.
6. Follow the on-screen instructions to align the print head. Find and select the number for the most solid pattern in each group using the ▲ or ▼ button, and then press the OK button.

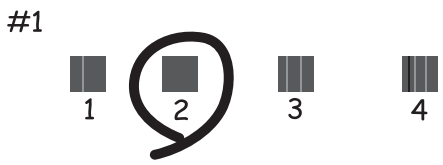

Note:

❏ *The test pattern may vary by model.*

❏ *If print quality is not improved, align the print head from a computer.*

Related Information

➡ "Loading Paper in the Paper Cassette 2" on page 26

Aligning the Print Head - Windows

1. Load A4-size plain paper in the printer.
2. Access the printer driver window.
3. Click **Print Head Alignment** on the **Maintenance** tab.
4. Follow the on-screen instructions.

Related Information

➡ "Loading Paper in the Paper Cassette 2" on page 26
➡ "Windows Printer Driver" on page 118

Aligning the Print Head - Mac OS X

1. Load A4-size plain paper in the printer.
2. Select **System Preferences** from the  menu > **Printers & Scanners** (or **Print & Scan**, **Print & Fax**), and then select the printer.
3. Click **Options & Supplies** > **Utility** > **Open Printer Utility**.
4. Click **Print Head Alignment**.
5. Follow the on-screen instructions.

Related Information

➡ "Loading Paper in the Paper Cassette 2" on page 26

Cleaning the Paper Path

When the printouts are smeared or scuffed, clean the roller inside. You cannot use the cleaning sheet that came with Epson paper.

> ***Important:***
> *Do not use tissue paper to clean the inside of the printer. The print head nozzles may be clogged with lint.*

1. Make sure there is no dust or stains on the scanner glass and the document cover.
2. Load A4-size plain paper in the paper cassette.
3. Start copying without placing an original on the scanner glass.

   Note:
   Repeat this procedure until the paper is not smeared with ink.

Related Information

➡ "Loading Paper in the Paper Cassette 2" on page 26

➡ "Copying Basics" on page 76

Cleaning the Scanner Glass

When the copies or scanned images are smeared or scuffed, clean the scanner glass.

> ***Important:***
> *Never use alcohol or thinner to clean the printer. These chemicals can damage the printer.*

1. Open the document cover.

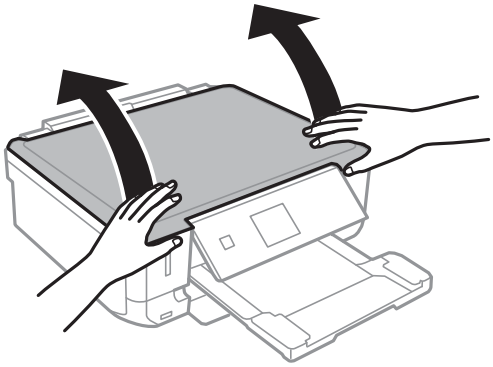

2. Use a soft, dry, clean cloth to clean the surface of the scanner glass.

   Note:
   - ❏ *If the glass surface is stained with grease or some other hard-to-remove material, use a small amount of glass cleaner and a soft cloth to remove it. Wipe off all remaining liquid.*
   - ❏ *Do not press the glass surface too hard.*
   - ❏ *Be careful not to scratch or damage the surface of the glass. A damaged glass surface can decrease the scan quality.*

Saving Power

The printer enters sleep mode or turns off automatically if no operations are performed for a set period. You can adjust the time before power management is applied. Any increase will affect the printer's energy efficiency. Please consider the environment before making any change.

Saving Power - Control Panel

1. Enter **Setup** from the home screen using the ◀ or ▶ button, and then press the OK button.
2. Select **Printer Setup** using the ▲ or ▼ button, and then press the OK button.
3. Select **Power Off Timer** or **Sleep Timer** using the ▲ or ▼ button, and then press the OK button.

4. Select the setting using the ▲ or ▼ button, and then press the OK button.

Saving Power - Windows

1. Access the printer driver window.
2. Click **Printer and Option Information** on the **Maintenance** tab.
3. Select the time period before the printer enters sleep mode as the **Sleep Timer** setting, and click **Send**. To make the printer turn off automatically, select the time period as the **Power Off Timer** setting, and click **Send**.
4. Click **OK**.

Saving Power - Mac OS X

1. Select **System Preferences** from the  menu > **Printers & Scanners** (or **Print & Scan**, **Print & Fax**), and then select the printer.
2. Click **Options & Supplies** > **Utility** > **Open Printer Utility**.
3. Click **Printer Settings**.
4. Select the time period before the printer enters sleep mode as the **Sleep Timer** setting, and click **Apply**. To make the printer turn off automatically, select the time period as the **Power Off Timer** setting, and click **Apply**.

Menu Options for Setup Mode

By selecting **Setup** on the home screen from the control panel, you can make printer settings or perform printer maintenance.

Menu Options for Ink Levels

Select the menus on the control panel as described below.

Setup > **Ink Levels**

Displays the approximate levels of the ink cartridges. When an ! icon is displayed, the ink cartridge is running low. When a X mark is displayed, the ink cartridge is expended.

Menu Options for Maintenance

Select the menus on the control panel as described below.

Setup > **Maintenance**

Nozzle Check

Prints a pattern to check if the print head nozzles are clogged.

Head Cleaning

Cleans clogged nozzles in the print head.

Print Head Alignment

Adjusts the print head to improve print quality.

Ink Cartridge(s) Replacement

Use this feature to replace the ink cartridges before the ink is expended.

Related Information

➡ “Checking and Cleaning the Print Head” on page 104

➡ “Aligning the Print Head” on page 106

Menu Options for Printer Setup

Select the menus on the control panel as described below.

Setup > **Printer Setup**

Paper Source Setting

❏ Paper Setup

Select the paper size and paper type you loaded in the paper source.

❏ Paper Configuration

Automatically displays the paper settings screen when paper is loaded. Disable this feature if you always load the same size of paper and you do not want to make paper settings every time you load paper. AirPrint is not available when this is disabled. Also, the printer does not warn you even if the paper settings do not match the paper you loaded.

CD/DVD

Adjusts the printing position of a CD/DVD by moving up, down, left, or right to fit.

Stickers

Adjusts the printing position of a photo sticker by moving up, down, left, or right to fit.

Thick Paper

Use this feature if ink smears and the paper gets dirty. When enabled, the printing speed may be slower. Only enable this setting when ink smears. This feature is disabled when the printer is turned off.

Sound

Adjusts the volume and turns sound on or off when you press buttons or an error occurs.

Quiet Mode

Reduces the noise the printer makes, however, this may reduce print speed. Depending on the paper type and print quality settings you selected, there may be no difference in the printer's noise level.

Screen Saver

By selecting **Memory Card Data**, photos are displayed sequentially when no operations are performed for about three minutes.

Power Off Timer

Automatically turns the printer off if no operations are performed for a set time period. You can adjust the time before power management is applied. Any increase will affect the printer's energy efficiency. Please consider the environment before making any change.

Sleep Timer

Select the time period before the printer enters sleep mode (energy saving mode) when no operations are performed. The LCD screen turns black when the set time passes.

Language

Select the display language.

Menu Options for Network Settings

Select the menus on the control panel as described below.

Setup > **Network Settings**

Network Status

Displays or prints the network settings and connection status.

Wi-Fi Setup

See the *Network Guide* to make the following settings.

❏ Wi-Fi Setup Wizard

Select a SSID, enter a password, and then connect the printer to a wireless (Wi-Fi) network.

❏ Push Button Setup (WPS)

Connects the printer to a wireless (Wi-Fi) network by pressing a WPS push button on a wireless router.

❏ PIN Code Setup (WPS)

In the wireless router utility, enter the PIN code displayed on the printer's screen to connect the printer to a wireless (Wi-Fi) network.

❏ Wi-Fi Auto Connect

Connects the printer to a wireless (Wi-Fi) network using a computer that is connected to the access point. Insert the software disc supplied with the printer into the computer, and then follow the on-screen instructions. When you are prompted to operate the printer, run this menu.

❏ Disable Wi-Fi

Disables the connection by turning off the wireless signal without deleting the network information. To enable the connection, set up the wireless (Wi-Fi) network again.

❏ Wi-Fi Direct Setup

Connects the printer to a wireless (Wi-Fi) network without a wireless router.

Manual Network Setup

Changes the network settings, such as the printer name or TCP/IP. See the *Network Guide* for more details.

Connection Check

Checks the status of the network connection and prints the network connection check report. If there are any problems with the connection, see the check report to solve the problem. See the *Network Guide* for more details.

Menu Options for Epson Connect Services

Select the menus on the control panel as described below.

Setup > **Epson Connect Services**

Status

Check whether or not the printer is registered and connected to the Epson Connect services.

Email Address

Check the printer's email address that is registered to the Epson Connect services.

Register/Delete

Register or delete the printer to or from the Epson Connect services.

Suspend/Resume

Select whether to suspend or resume Epson Connect services.

Menu Options for Google Cloud Print Services

Select the menus on the control panel as described below.

Setup > **Google Cloud Print Services**

Status

Check whether or not the printer is registered and connected to the Google Cloud Print services.

Suspend/Resume

Select whether to suspend or resume Google Cloud Print services.

Restore Default Settings

Resets the settings to their defaults.

Menu Options for File Sharing Setup

Select the menus on the control panel as described below.

Setup > **File Sharing Setup**

Select the connection method between the printer and a computer that will have write access to the memory card inserted in the printer. Read and write access is given to the computer with the priority connection. Only read access is given to other computers.

Related Information

➡ "Accessing a Memory Card From a Computer" on page 162

Menu Options for External Device Setup

Select the menus on the control panel as described below.

Setup > **External Device Setup**

Change the print settings to print directly from an external device such as a digital camera. For explanations on each setting item, see the descriptions of the menu options for printing from the control panel.

Related Information

➡ "Menu Options for Printing from the Control Panel" on page 48

Menu Options for Guide Functions

Select the menus on the control panel as described below.

Setup > **Guide Functions**

Paper Setting Alert

Displays a warning if the paper settings (print settings) for the print job do not match the printer's paper settings made when you loaded the paper. This setting prevents misprinting. However, the paper setting screen is not displayed when **Paper Configuration** is disabled in the following menus.

Setup > **Printer Setup** > **Paper Source Setting**

Menu Options for Firmware Update

Select the menus on the control panel as described below.

Setup > **Firmware Update**

Update

Checks if the latest version of the firmware has been uploaded to the network server. If an update is available, you can select whether or not to start updating.

Current Version

Displays the current firmware version of your printer.

Notification

Checks for firmware updates periodically and notifies you if an update is available.

Related Information

➡ "Updating the Printer's Firmware using the Control Panel" on page 129

Menu Options for Restore Default Settings

Select the menus on the control panel as described below.

Setup > **Restore Default Settings**

Network Settings

Resets the network settings to their defaults.

All Except Network Settings

Resets all settings except for network settings to their defaults.

All Settings

Resets all settings to their defaults.

Network Service and Software Information

This section introduces the network services and software products available for your printer from the Epson website or the supplied CD.

Epson Connect Service

By using Epson Connect service available on the Internet, you can print from your smartphone, tablet PC, or laptop, anytime and practically anywhere.

The features available on the Internet are as follows.

Email Print	Epson iPrint remote print	Scan to Cloud	Remote Print Driver
✓	✓	✓	✓

See the Epson Connect portal website for details.

https://www.epsonconnect.com/

http://www.epsonconnect.eu (Europe only)

Web Config

Web Config is an application that runs in a web browser, such as Internet Explorer and Chrome, on a computer or smart device. You can confirm the printer status or change the network service and printer settings. To use the Web Config, connect the printer and the computer or device to the same network.

Note:
The following browsers are supported.

OS	Browser
Windows XP or later	Internet Explorer 8 or later, Firefox*, Chrome*
Mac OS X v10.6.8 or later	Safari*, Firefox*, Chrome*
iOS*	Safari*
Android 2.3 or later	Default browser
Chrome OS*	Default browser

*: Use the latest version.

Running Web Config on a Web Browser

1. Check the printer's IP address.

   Select **Setup** > **Network Settings** > **Network Status** from the home screen, and then check the printer's IP address.

2. Launch a Web browser from a computer or smart device, and then enter the printer's IP address.

   Format:

   IPv4: http://the printer's IP address/

   IPv6: http://[the printer's IP address]/

   Examples:

   IPv4: http://192.168.100.201/

   IPv6: http://[2001:db8::1000:1]/

   Note:
   Using the smart device, you can also run Web Config from the maintenance screen of Epson iPrint.

Related Information

➡ "Using Epson iPrint" on page 70

Running Web Config on Windows

When connecting a computer to the printer using WSD, follow the steps below to run Web Config.

1. Access the devices and printers screen in Windows.

   ❏ Windows 8.1/Windows 8

   Select **Desktop** > **Settings** > **Control Panel** > **View devices and printers** in **Hardware and Sound** (or **Hardware**).

   ❏ Windows 7

   Click the start button, and select **Control Panel** > **View devices and printers** in **Hardware and Sound**.

   ❏ Windows Vista

   Click the start button, and select **Control Panel** > **Printers** in **Hardware and Sound**.

2. Right-click on your printer and select **Properties**.

3. Select the **Web Service** tab and click the URL.

Running Web Config on Mac OS X

1. Select **System Preferences** from the menu > **Printers & Scanners** (or **Print & Scan**, **Print & Fax**), and then select the printer.

2. Click **Options & Supplies**> **Show Printer Webpage**.

Windows Printer Driver

The printer driver controls the printer according to the commands from an application. Making settings on the printer driver provides the best printing results. You can also check the status of the printer or keep it in top operating condition using the printer driver utility.

Note:
*You can change the language of the printer driver. Select the language you want to use from the **Language** setting on the **Maintenance** tab.*

Accessing the printer driver from applications

To make settings that apply only to the application you are using, access from that application.

Select **Print** or **Print Setup** from the **File** menu. Select your printer, and then click **Preferences** or **Properties**.

Note:
Operations differ depending on the application. See the application's help for details.

Accessing the printer driver from the control panel

To make settings that apply to all of the applications, access from the control panel.

❏ Windows 8.1/Windows 8

Select **Desktop** > **Settings** > **Control Panel** > **View devices and printers** in **Hardware and Sound**. Right-click on your printer, or press and hold it and then select **Printing preferences**.

❏ Windows 7

Click the start button, and select **Control Panel** > **View devices and printers** in **Hardware and Sound**. Right-click on your printer and select **Printing preferences**.

❏ Windows Vista

Click the start button, and select **Control Panel** > **Printers** in **Hardware and Sound**. Right-click on your printer and select **Printing preferences**.

❏ Windows XP

Click the start button, and select **Control Panel** > **Printers and Other Hardware** > **Printers and Faxes**. Right-click on your printer and select **Printing preferences**.

Accessing the printer driver from the printer icon on the task bar

The printer icon on the desktop task bar is a shortcut icon allowing you to quickly access the printer driver.

If you click the printer icon and select **Printer Settings**, you can access the same printer settings window as the one displayed from the control panel. If you double-click this icon, you can check the status of the printer.

Note:
*If the printer icon is not displayed on the task bar, access the printer driver window, click **Monitoring Preferences** on the **Maintenance** tab, and then select **Register the shortcut icon to the taskbar**.*

Guide to Windows Printer Driver

Help is available in the printer driver for Windows. To view explanations of the setting items, right-click on each item, and then click **Help**.

Main Tab

You can make basic settings for printing, such as paper type or paper size.

You can also make settings for printing both sides of the paper or printing multiple pages on one sheet.

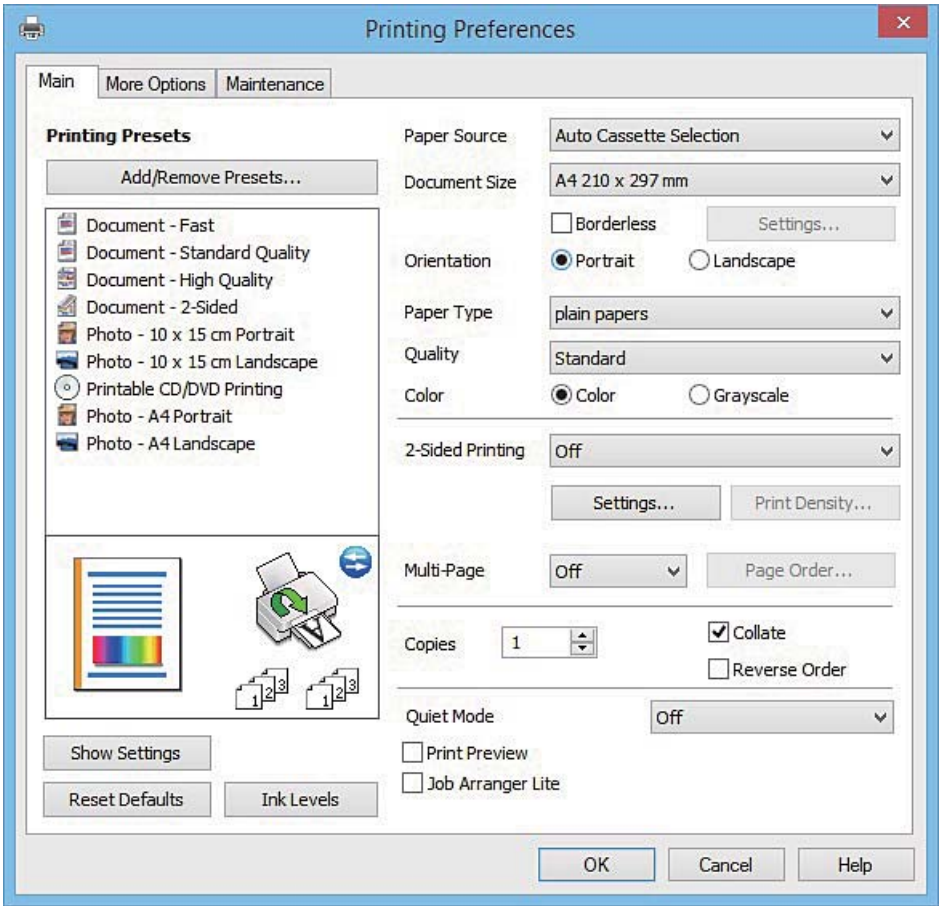

More Options Tab

You can select additional layout and printing options such as changing the size of a printout or making color corrections.

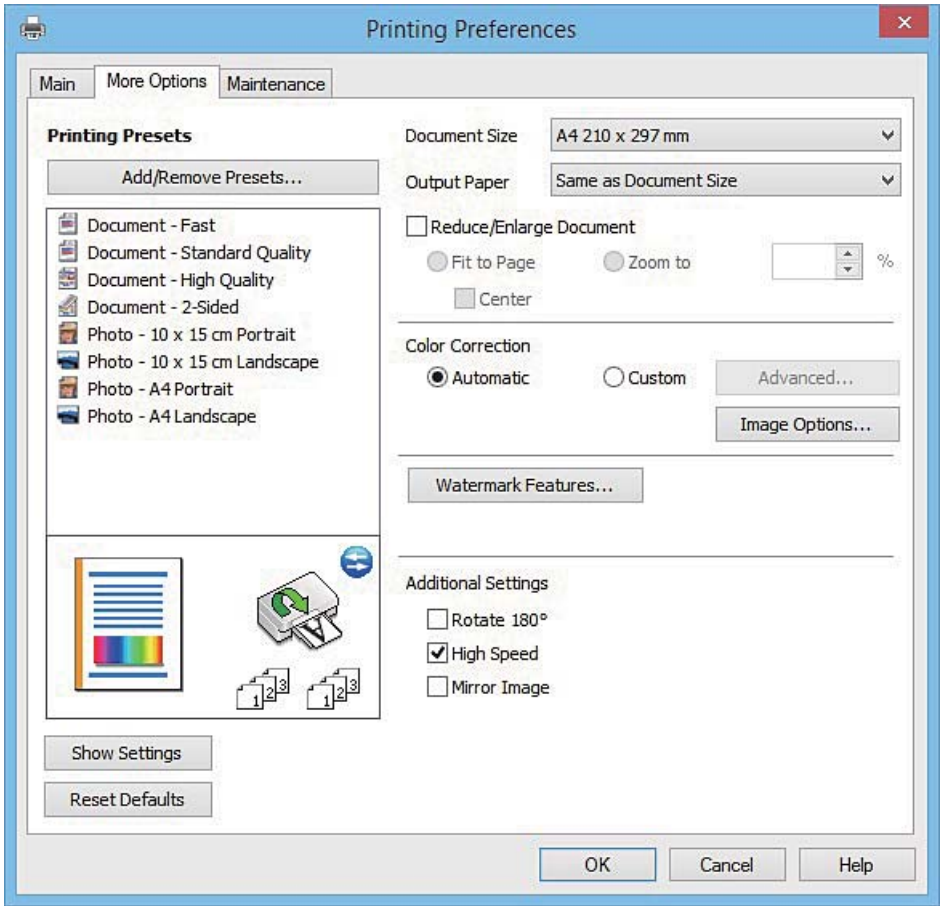

Maintenance Tab

You can run maintenance features such as nozzle check and print head cleaning, and by starting **EPSON Status Monitor 3**, you can check printer status and error information.

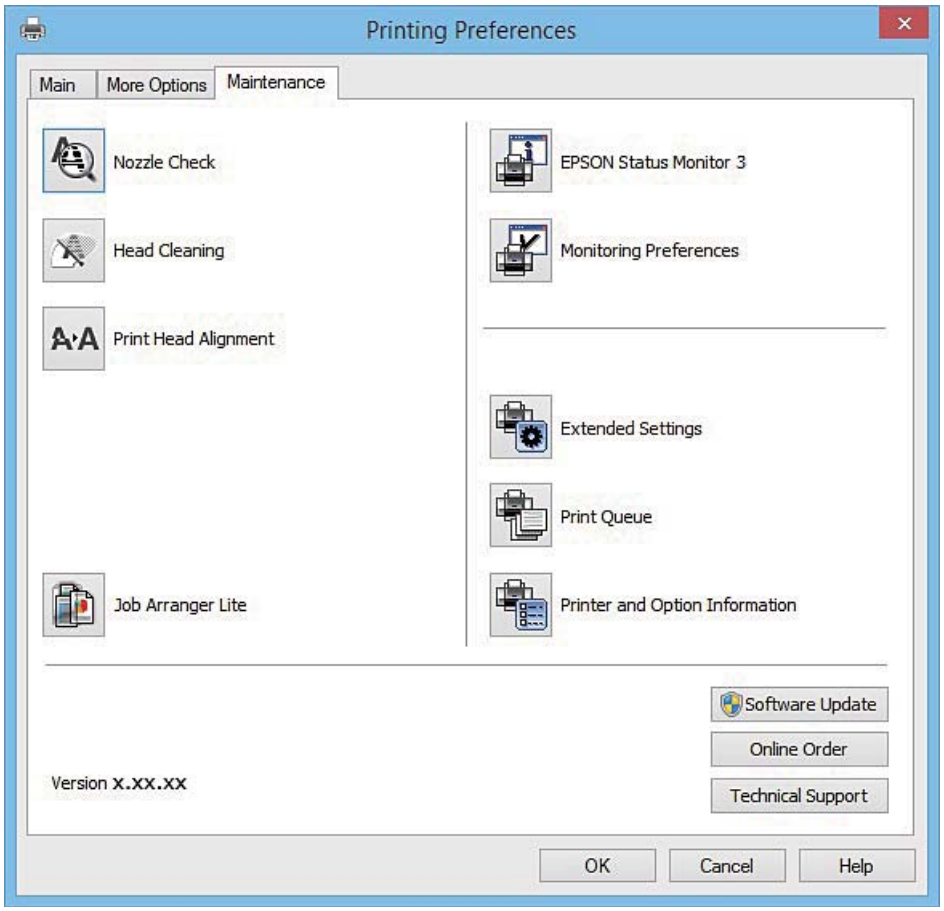

Making Operation Settings for the Windows Printer Driver

You can make settings such as enabling **EPSON Status Monitor 3**.

1. Access the printer driver window.
2. Click **Extended Settings** on the **Maintenance** tab.
3. Make the appropriate settings, and then click **OK**.

   See the online help for explanations of the setting items.

Related Information

➡ "Windows Printer Driver" on page 118

Mac OS X Printer Driver

The printer driver controls the printer according to the commands from an application. Making settings on the printer driver provides the best printing results. You can also check the status of the printer or keep it in top operating condition using the printer driver utility.

Accessing the printer driver from applications

Click **Page Setup** or **Print** on the **File** menu of your application. If necessary, click **Show Details** (or ▼) to expand the print window.

Note:
*Depending on the application being used, **Page Setup** may not be displayed in the **File** menu, and the operations for displaying the print screen may differ. See the application's help for details.*

Starting the utility

Select **System Preferences** from the menu > **Printers & Scanners** (or **Print & Scan**, **Print & Fax**), and then select the printer. Click **Options & Supplies** > **Utility** > **Open Printer Utility**.

Guide to Mac OS X Printer Driver

Print dialog

Switch the pop-up menu on the center of the screen to show more items.

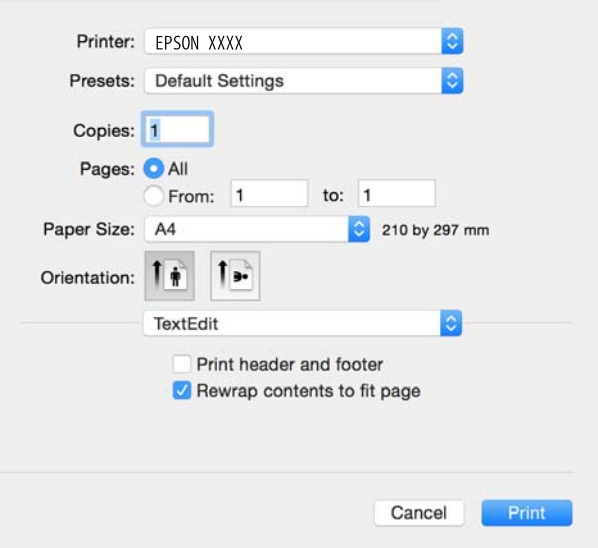

Pop-up Menu	Descriptions
Print Settings	You can make the basic print settings such as paper type and print quality.
Two-sided Printing Settings	You can select a binding direction for 2-sided printing or select a document type.
Layout	You can select a layout for printing several pages on one sheet or select to print a border.

Pop-up Menu	Descriptions
Paper Handling	You can reduce or enlarge the size of the print job to automatically fit the paper size you loaded.
Color Matching	You can adjust the colors.
Color Options	When you select **EPSON Color Controls** from the **Color Matching** menu, you can select a color correction method.

Note:
On Mac OS X v10.8.x or later, if ***Print Settings*** *menu is not displayed, Epson printer driver has not been installed correctly.*

Select ***System Preferences*** *from the menu >* ***Printers & Scanners*** *(or* ***Print & Scan****,* ***Print & Fax****), remove the printer, and then add the printer again. See the following to add a printer.*

http://epson.sn

Epson Printer Utility

You can run a maintenance feature such as nozzle check and print head cleaning, and by starting **EPSON Status Monitor**, you can check printer status and error information.

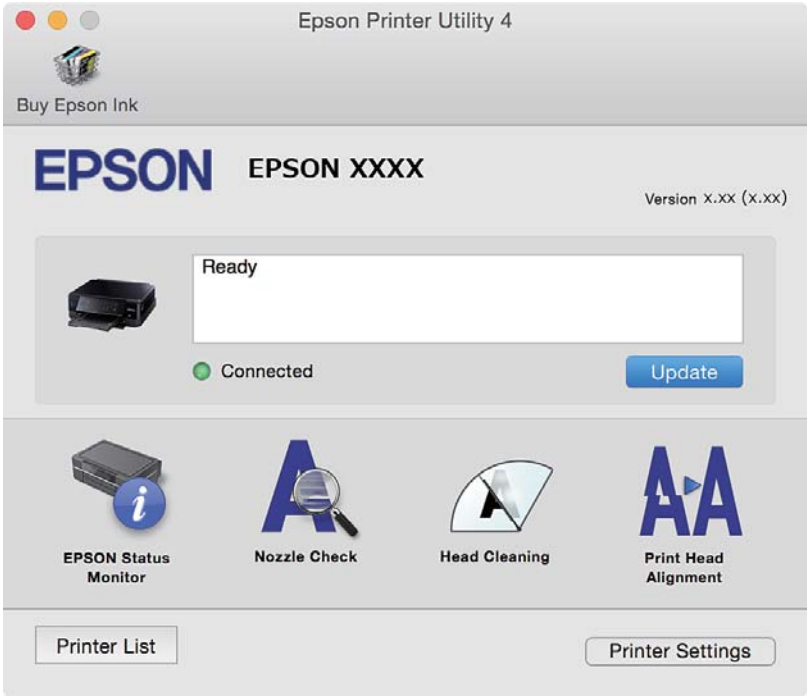

Making Operation Settings for the Mac OS X Printer Driver

Accessing the Operation Settings Window of the Mac OS X Printer Driver

Select **System Preferences** from the menu > **Printers & Scanners** (or **Print & Scan**, **Print & Fax**), and then select the printer. Click **Options & Supplies** > **Options** (or **Driver**).

Operation Settings of the Mac OS X Printer Driver

- ❏ Thick paper and envelopes: Prevents the ink from smearing when printing on thick paper. However, this may reduce print speed.
- ❏ Skip Blank Page: Avoids printing blank pages.
- ❏ Quiet Mode: Reduces the noise the printer makes, however, may reduce print speed.
- ❏ Permit temporary black printing: Prints only with black ink temporarily.
- ❏ Automatic Cassette Switching: Automatically feeds paper from paper cassette 2 when paper run out in paper cassette 1.
- ❏ High Speed Printing: Prints when the print head moves in both directions. The print speed is faster, but the quality may decline.
- ❏ Warning Notifications: Allows the printer driver to display warning notifications.
- ❏ Establish bidirectional communication: Usually, this should be set to **On**. Select **Off** when acquiring the printer information is impossible because the printer is shared with Windows computers on a network or for any other reason.

Related Information

➡ "Temporarily Printing with Black Ink" on page 100

EPSON Scan (Scanner Driver)

EPSON Scan is an application for controlling scanning. You can adjust the size, resolution, brightness, contrast, and quality of the scanned image.

Note:
You can also start EPSON Scan from a TWAIN-compliant scanning application.

Starting on Windows

- ❏ Windows 8.1/Windows 8

  Enter the application name in the search charm, and then select the displayed icon.

- ❏ Except for Windows 8.1/Windows 8

  Click the start button, and select **All Programs** or **Programs** > **EPSON** > **EPSON Scan** > **EPSON Scan**.

Starting on Mac OS X

Note:
EPSON Scan does not support the Mac OS X fast user switching feature. Turn off fast user switching.

Select **Go** > **Applications** > **Epson Software** > **EPSON Scan**.

Epson Event Manager

Epson Event Manager is an application that allows you to manage scanning from the control panel and save images to a computer. You can add your own settings as presets, such as the document type, the save folder location, and the image format. See the application's help for details.

Starting on Windows

❏ Windows 8.1/Windows 8

Enter the application name in the search charm, and then select the displayed icon.

❏ Except for Windows 8.1/Windows 8

Click the start button, and select **All Programs** or **Programs** > **Epson Software** > **Event Manager**.

Starting on Mac OS X

Select **Go** > **Applications** > **Epson Software** > **Event Manager**.

Related Information

➡ "Scanning to a Computer" on page 84

Epson Easy Photo Print

Epson Easy Photo Print is an application that allows you to easily print photos with various layouts. You can preview the photo image and adjust the images or position. You can also print photos with a frame. See the application's help for details.

Note:
To use this application, the printer driver needs to be installed.

Starting on Windows

❏ Windows 8.1/Windows 8

Enter the application name in the search charm, and then select the displayed icon.

❏ Except for Windows 8.1/Windows 8

Click the start button, and then select **All Programs** or **Programs** > **Epson Software** > **Epson Easy Photo Print**.

Starting on Mac OS X

Select **Go** > **Applications** > **Epson Software** > **Epson Easy Photo Print**.

Epson Print CD

Epson Print CD is an application that allows you to design a CD/DVD label to be printed directly onto a CD/DVD. You can also print a CD/DVD jacket for CD/DVD case. See the application's help for details.

Note:
To use this application, the printer driver needs to be installed.

Starting on Windows

❏ Windows 8/Windows 8.1

Enter the application name in the search charm, and then select the displayed icon.

❏ Except for Windows 8/Windows 8.1

Click the start button, and then select **All Programs** or **Programs** > **Epson Software** > **Print CD**.

Starting on Mac OS X

Select Go-**Applications** > **Epson Software** > **Print CD** > **Print CD**.

E-Web Print (for Windows Only)

E-Web Print is an application that allows you to easily print web pages with various layouts. See the application's help for details. You can access the help from the **E-Web Print** menu on the **E-Web Print** tool bar.

Starting

When you install E-Web Print, it is displayed in your browser. Click **Print** or **Clip**.

Easy Photo Scan

Easy Photo Scan is an application that allows you to scan photos and easily send the scanned image to a computer or cloud service. You can also easily adjust the scanned image. See the application's help for details.

Note:
To use this application, the scanner driver EPSON Scan needs to be installed.

Starting on Windows

❏ Windows 8.1/Windows 8

Enter the application name in the search charm, and then select the displayed icon.

❏ Except for Windows 8.1/Windows 8

Click the start button, and select **All Programs** or **Programs** > **Epson Software** > **Easy Photo Scan**.

Starting on Mac OS X

Select **Go** > **Applications** > **Epson Software** > **Easy Photo Scan**.

EPSON Software Updater

EPSON Software Updater is an application that checks for new or updated software on the internet and installs it. You can also update the printer's firmware and manual.

Starting on Windows

❏ Windows 8.1/Windows 8

Enter the application name in the search charm, and then select the displayed icon.

❏ Except for Windows 8.1/Windows 8

Click the start button, and select **All Programs** or **Programs** > **Epson Software** > **EPSON Software Updater**.

Note:
You can also start EPSON Software Updater by clicking the printer icon on the task bar on the desktop, and then selecting ***Software Update****.*

Starting on Mac OS X

Select **Go** > **Applications** > **Epson Software** > **EPSON Software Updater**.

Uninstalling Applications

Note:
Log on to your computer as an administrator. Enter the administrator password if the computer prompts you.

Uninstalling Applications - Windows

1. Press the ⏻ button to turn off the printer.
2. Quit all running applications.
3. Open **Control Panel**:
   - ❏ Windows 8.1/Windows 8
     Select **Desktop** > **Settings** > **Control Panel**.
   - ❏ Except for Windows 8.1/Windows 8
     Click the start button and select **Control Panel**.
4. Open **Uninstall a program** (or **Add or Remove Programs**):
   - ❏ Windows 8.1/Windows 8/Windows 7/Windows Vista
     Select **Uninstall a program** in **Programs**.
   - ❏ Windows XP
     Click **Add or Remove Programs**.
5. Select the application you want to uninstall.
6. Uninstall the applications:
   - ❏ Windows 8.1/Windows 8/Windows 7/Windows Vista
     Click **Uninstall/Change** or **Uninstall**.
   - ❏ Windows XP
     Click **Change/Remove** or **Remove**.

   Note:
   *If the **User Account Control** window is displayed, click **Continue**.*
7. Follow the on-screen instructions.

Uninstalling Applications - Mac OS X

1. Download the Uninstaller using EPSON Software Updater.

   Once you have downloaded the Uninstaller, you do not need to download it again each time you uninstall the application.

2. Press the ⏻ button to turn off the printer.

3. To uninstall the printer driver, select **System Preferences** from the menu > **Printers & Scanners** (or **Print & Scan**, **Print & Fax**), and then remove the printer from the enabled printers list.

4. Quit all running applications.

5. Select **Go** > **Applications** > **Epson Software** > **Uninstaller**.

6. Select the application you want to uninstall, and then click **Uninstall**.

> ***Important:***
> *The Uninstaller removes all drivers for Epson inkjet printers on the computer. If you use multiple Epson inkjet printers and you only want to delete some drivers, delete all of them first, and then install the necessary printer driver again.*

Note:
*If you cannot find the application you want to uninstall in the application list, you cannot uninstall using the Uninstaller. In this situation, select **Go** > **Applications** > **Epson Software**, select the application you want to uninstall, and then drag it to the trash icon.*

Related Information

➡ "EPSON Software Updater" on page 126

Installing Applications

Connect your computer to the network and install the latest version of applications from the website.

Note:
❏ *Log on to your computer as an administrator. Enter the administrator password if the computer prompts you.*

❏ *When reinstalling an application, you need to uninstall it first.*

1. Quit all running applications.

2. When installing the printer driver or EPSON Scan, disconnect the printer and the computer temporarily.

   Note:
   Do not connect the printer and the computer until you are instructed to do so.

3. Install the applications by following the instructions on the website below.

   http://epson.sn

   Note:
   If you are using a Windows computer and you cannot download applications from the website, install them from the software disc that came with the printer.

Related Information

➡ "Uninstalling Applications" on page 127

Updating Applications and Firmware

You may be able to clear certain problems and improve or add functions by updating the applications and the firmware. Make sure you use the latest version of the applications and firmware.

1. Make sure that the printer and the computer are connected, and the computer is connected to the internet.
2. Start EPSON Software Updater, and update the applications or the firmware.

> ***Important:***
> *Do not turn off the computer or the printer while updating.*

Note:
If you cannot find the application you want to update in the list, you cannot update using the EPSON Software Updater. Check for the latest versions of the applications from your local Epson website.

http://www.epson.com

Related Information

➡ "EPSON Software Updater" on page 126

Updating the Printer's Firmware using the Control Panel

If the printer is connected to the Internet, you can update the printer's firmware using the control panel. By updating the firmware, the printer's performance may improve, or new functions may be added. You can also set the printer to regularly check for firmware updates and notify you if any are available.

1. Enter **Setup** from the home screen using the ◀ or ▶ button, and then press the OK button.
2. Select **Firmware Update** using the ▲ or ▼ button, and then press the OK button.
3. Select **Update** using the ▲ or ▼ button, and then press the OK button.

   Note:
   *Select **Notification** > **On** to set the printer to regularly check for available firmware updates.*
4. Check the message displayed on the screen and press the OK button. The printer starts searching for available updates.

5. If a message is displayed on the LCD screen informing you that a firmware update is available, follow the on-screen instructions to start the update.

> ***Important:***
>
> ❏ *Do not turn off or unplug the printer until the update is complete; otherwise, the printer may malfunction.*
>
> ❏ *If the firmware update is not completed or is unsuccessful, the printer does not start up normally and "Recovery Mode" is displayed on the LCD screen the next time the printer is turned on. In this situation, you need to update the firmware again using a computer. Connect the printer to the computer with a USB cable. While "Recovery Mode" is displayed on the printer, you cannot update the firmware over a network connection. On the computer, access your local Epson website, and then download the latest printer firmware. See the instructions on the website for the next steps.*

Related Information

➡ "Technical Support Web Site" on page 163

Solving Problems

Checking the Printer Status

Checking Messages on the LCD Screen

If an error message is displayed on the LCD screen, follow the on-screen instructions or the solutions below to solve the problem.

Error Messages	Solutions
Printer error. Turn the power off and on again. For details, see documentation.	If the error message is still displayed after turning the power off and on again, contact Epson support.
Operation canceled. An error occurred while saving.	The external storage device, such as a memory card, may be damaged. Check if the device is available.
Ink is low.	You can continue printing until you are prompted to replace the ink cartridges. However, note that the printer cannot print if any of the ink cartridges is expended. Prepare new cartridges as soon as possible.
You need to replace the following ink cartridge(s).	To ensure you receive premium print quality and to help protect your print head, a variable ink safety reserve remains in the cartridge when your printer indicates it is time to replace the cartridge. Replace the cartridge when you are prompted to do so.
Paper Configuration is disabled. Some features may not be available. For details, see your documentation.	If **Paper Configuration** is disabled, you cannot use AirPrint. In addition, messages notifying you that the paper size and type do not match are not displayed. Keep this setting enabled unless you always use the same size and type of paper and do not need to change the paper settings.
The printer's ink pad is nearing the end of its service life. Please contact Epson Support.	Contact Epson or an authorised Epson service provider to replace the ink pad*. It is not a user-serviceable part. The message will be displayed until the ink pad is replaced. Press the ◇ button to resume printing.
The printer's ink pad is at the end of its service life. Please contact Epson Support.	Contact Epson or an authorised Epson service provider to replace the ink pad*. It is not a user-serviceable part.
Communication error. Check if a computer is connected.	Connect the computer and the printer correctly. If you are connecting over a network, see the *Network Guide*. If the error message is still displayed, make sure that EPSON Scan and Epson Event Manager are installed on the computer.
Combination of the IP address and the subnet mask is invalid. See your documentation.	See the *Network Guide*.
Update the root certificate to use cloud services.	Run Web Config, and then update the root certificate.

Error Messages	Solutions
Recovery Mode	The printer has started in recovery mode because the firmware update failed. Follow the steps below to try to update the firmware again. 1. Connect the computer and the printer with a USB cable. (During recovery mode, you cannot update the firmware over a network connection.) 2. Visit your local Epson website for further instructions.

* In some print cycles a very small amount of surplus ink may be collected in the ink pad. To prevent ink leakage from the pad, the product is designed to stop printing when the pad has reached its limit. Whether and how often this is required varies according to the number of pages you print, the type of material that you print, and the number of cleaning cycles that the printer performs. The need for replacement of the pad does not mean that your printer has ceased to operate in accordance with its specifications. The printer will advise you when the pad requires replacing and this can only be performed by an authorised Epson Service provider. The Epson warranty does not cover the cost of this replacement.

Related Information

➡ "Contacting Epson Support" on page 164
➡ "Supported Memory Card Specifications" on page 155
➡ "Supported External Storage Device Specifications" on page 156
➡ "Installing Applications" on page 128
➡ "Web Config" on page 116
➡ "Updating Applications and Firmware" on page 129

Checking the Printer Status - Windows

1. Access the printer driver window.
2. Click **EPSON Status Monitor 3** on the **Maintenance** tab.

   Note:
   - ❑ *You can also check the printer status by double-clicking the printer icon on the taskbar. If the printer icon is not added to the taskbar, click* ***Monitoring Preferences*** *on the* ***Maintenance*** *tab, and then select* ***Register the shortcut icon to the taskbar****.*
   - ❑ *If* ***EPSON Status Monitor 3*** *is disabled, click* ***Extended Settings*** *on the* ***Maintenance*** *tab, and then select* ***Enable EPSON Status Monitor 3****.*

Related Information

➡ "Windows Printer Driver" on page 118

Checking Printer Status - Mac OS X

1. Select **System Preferences** from the menu > **Printers & Scanners** (or **Print & Scan**, **Print & Fax**), and then select the printer.
2. Click **Options & Supplies** > **Utility** > **Open Printer Utility**.
3. Click **EPSON Status Monitor**.

Removing Jammed Paper

Check the error displayed on the control panel and follow the instructions to remove the jammed paper including any torn pieces. Next, clear the error.

> ***Important:***
> *Remove the jammed paper carefully. Removing the paper vigorously may cause damage to the printer.*

Removing Jammed Paper from the Paper Cassette

1. Close the output tray.
2. Pull out the paper cassette.

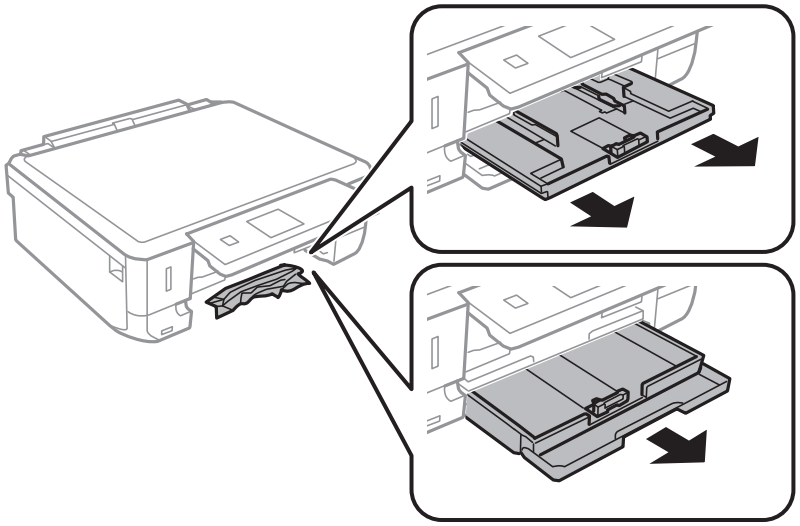

3. Remove the jammed paper.

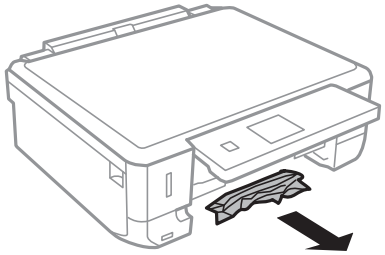

4. Align the edges of the paper and slide the edge guides to the edges of the paper.

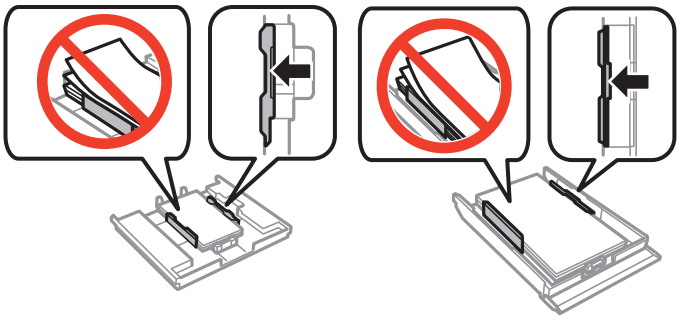

5. Insert the paper cassette in the printer.

Removing Jammed Paper from Inside the Printer

> ⚠ ***Caution:***
>
> ❏ *Be careful not to trap your hand or fingers when opening or closing the scanner unit. Otherwise you may be injured.*
>
> ❏ *Never touch the buttons on the control panel while your hand is inside the printer. If the printer starts operating, it could cause an injury. Be careful not to touch the protruding parts to avoid injury.*

1. Open the scanner unit with the document cover closed.

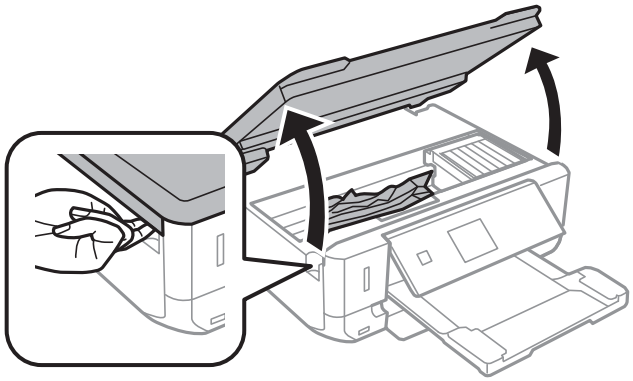

2. Remove the jammed paper.

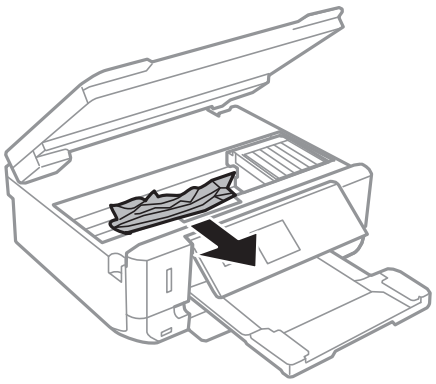

Important:

Do not touch the white flat cable or translucent part inside the printer. Doing so may cause a malfunction.

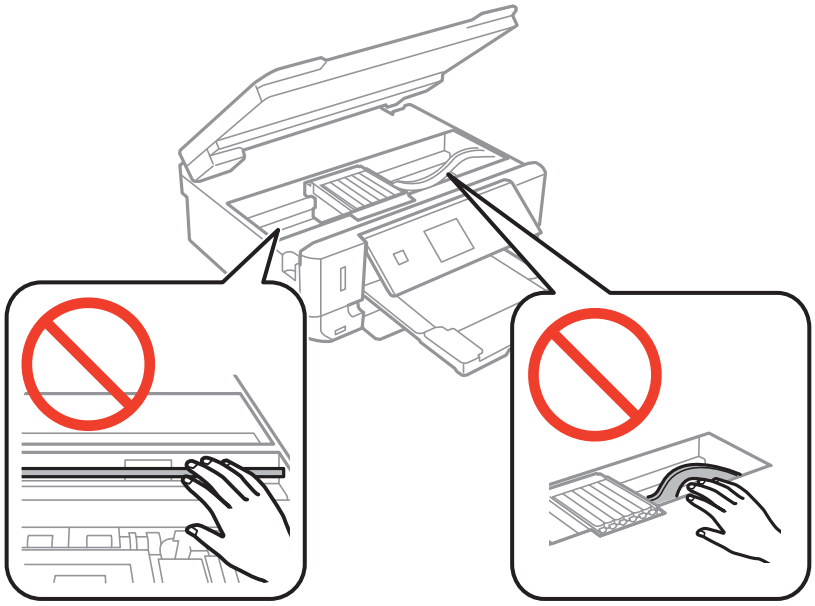

3. Close the scanner unit.

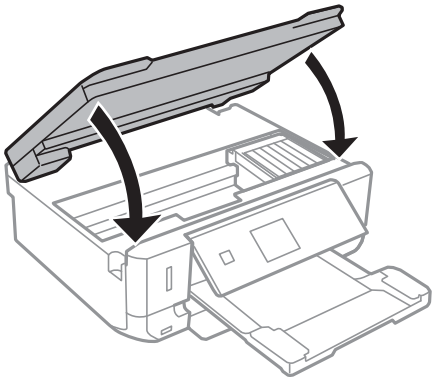

Removing Jammed Paper from the Rear Cover

1. Remove the rear cover.

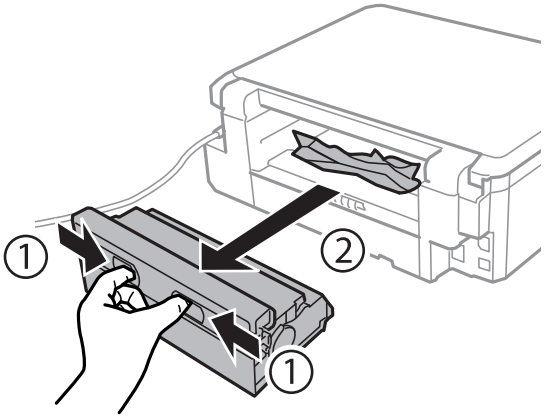

2. Remove the jammed paper.

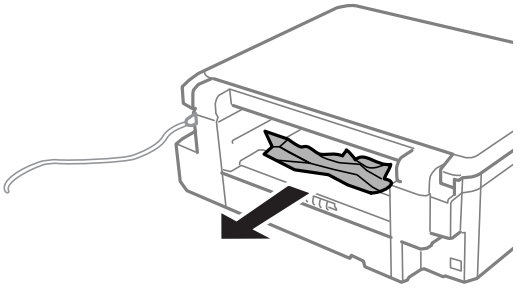

3. Remove jammed paper from the rear cover.

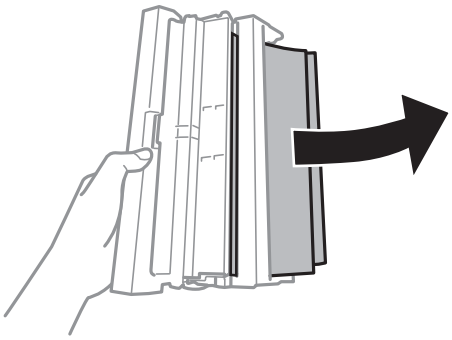

4. Open the cover of the rear cover.

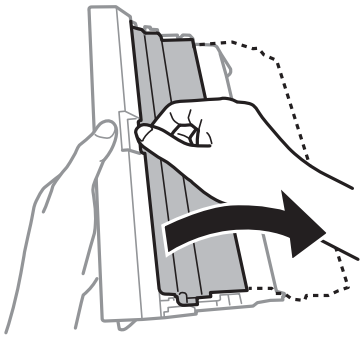

5. Remove the jammed paper.

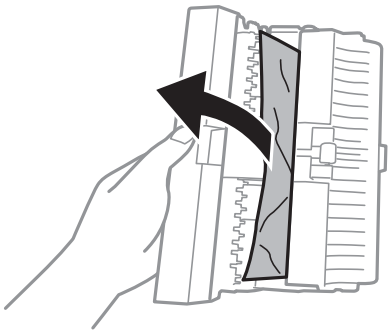

6. Close the cover of the rear cover, and then insert the rear cover in the printer.

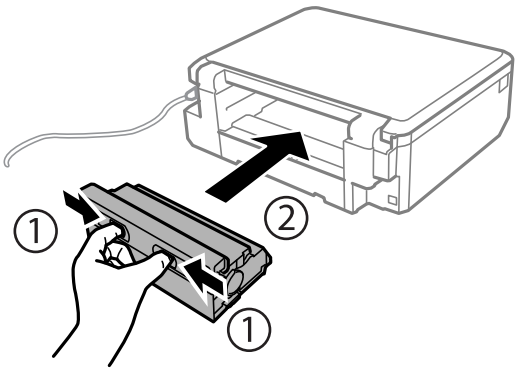

Paper Does Not Feed Correctly

Check the following points, and then take the appropriate actions to solve the problem.

- ❏ Place the printer on a flat surface and operate in the recommended environmental conditions.
- ❏ Use paper supported by this printer.
- ❏ Follow the paper handling precautions.
- ❏ Make sure the paper size and paper type settings match the actual paper size and paper type loaded in the printer.

Related Information

➡ “Environmental Specifications” on page 158
➡ “Paper Handling Precautions” on page 19
➡ “Available Paper and Capacities” on page 20
➡ “List of Paper Types” on page 21

Paper Jams

❏ Load paper in the correct direction, and slide the edge guides against the edges of the paper.

❏ Load one sheet of paper at a time if you have loaded several sheets of paper.

Related Information

➡ “Removing Jammed Paper” on page 133
➡ “Loading Paper in the Paper Cassette 1” on page 22
➡ “Loading Paper in the Paper Cassette 2” on page 26

Paper Feeds at a Slant

Load paper in the correct direction, and slide the edge guides against the edges of the paper.

Related Information

➡ “Loading Paper in the Paper Cassette 1” on page 22
➡ “Loading Paper in the Paper Cassette 2” on page 26

Several Sheets of Paper are Fed at a Time

❏ Load one sheet of paper at a time.

❏ When several sheets of paper are fed at a time during manual 2-sided printing, remove any paper which is loaded in the printer before you reload the paper.

No Paper Feeds

Do not load more than the maximum number of sheets specified for the paper. For plain paper, do not load above the line indicated by the triangle symbol on the edge guide.

Related Information

➡ “Available Paper and Capacities” on page 20

CD/DVD Tray is Ejected

❏ Make sure the disc is properly set on the tray and reinsert the tray correctly.

❏ Do not insert the CD/DVD tray until you are instructed to do so. Otherwise, an error occurs and the tray is ejected.

Related Information

➡ "Loading a CD/DVD" on page 37

Power and Control Panel Problems

Power Does Not Turn On

❏ Hold down the ⏻ button for a little longer.

❏ Make sure the power cord is securely plugged in.

Lights Came On and then Went Out

The printer's voltage may not match the outlet rating. Turn off the printer and unplug it immediately. Then check the label on the printer.

> ⚠ ***Caution:***
> *If the voltage does not match, DO NOT PLUG YOUR PRINTER BACK IN. Contact your dealer.*

Power Does Not Turn Off

Hold down the ⏻ button for a little longer. If you still cannot turn off the printer, unplug the power cord. To prevent the print head from drying out, turn the printer back on and turn it off by pressing the ⏻ button.

LCD Screen Gets Dark

The printer is in sleep mode. Press any button on the control panel to return the LCD screen to its former state.

Cannot Print from a Computer

❏ Install the printer driver.

❏ Connect the USB cable securely to the printer and the computer.

❏ If you are using a USB hub, try to connect the printer directly to the computer.

❏ If you cannot print over a network, see the *Network Guide*.

❏ If you are printing a large data size image, the computer may run out of memory. Print the image at a lower resolution or a smaller size.

❏ In Windows, click **Print Queue** on the printer driver's **Maintenance** tab, and then check the following.

❏ Check if there are any paused print jobs.

Cancel printing if necessary.

❏ Make sure the printer is not offline or pending.

If the printer is offline or pending, clear the offline or pending setting from the **Printer** menu.

❏ Make sure the printer is selected as the default printer from the **Printer** menu (there should be a check mark on the menu item).

If the printer is not selected as the default printer, set it as the default printer.

❏ Make sure the printer port is selected correctly in **Property** > **Port** from the **Printer** menu as follows.

Select "**USBXXX**" for a USB connection, or "**EpsonNet Print Port**" for a network connection.

❏ In Mac OS X, make sure the printer status is not **Pause**.

Select **System Preferences** from the menu > **Printers & Scanners** (or **Print & Scan**, **Print & Fax**), and then double-click the printer. If the printer is paused, click **Resume** (or **Resume Printer**).

Related Information

➡ "Installing Applications" on page 128

➡ "Canceling Printing" on page 75

Cannot Use AirPrint

❏ In the **Printer Setup** > **Paper Source Setting** menu on the control panel, enable **Paper Configuration**.

❏ Enable the AirPrint setting on Web Config.

Related Information

➡ "Menu Options for Printer Setup" on page 110

➡ "Web Config" on page 116

Printout Problems

Nothing or a Very Faint Image is Printed

If you have not used the printer for a long time, the print head nozzles may be clogged and ink drops may not be discharged. Perform a nozzle check, and then clean the print head if any of the print head nozzles are clogged.

Related Information

➡ "Checking and Cleaning the Print Head" on page 104

Print Quality is Poor

Check the following if the print quality is poor due to blurry prints, banding, missing colors, faded colors, misalignment, and mosaic-like patterns in the prints.

- ❏ Use paper supported by this printer.
- ❏ Select the appropriate paper type setting for the type of paper loaded in the printer.
- ❏ Do not print on paper that is damp, damaged, or too old.
- ❏ If the paper is curled or the envelope is puffed up, flatten it.
- ❏ Perform a nozzle check, and then clean the print head if any of the print head nozzles are clogged.
- ❏ Align the print head.
- ❏ Print using a higher quality setting.
- ❏ Do not stack the paper immediately after printing.
- ❏ Dry the printouts completely before filing or displaying them. When drying the printouts, avoid direct sun light, do not use a dryer, and do not touch the printed side of paper.
- ❏ When printing images or photos, Epson recommends using genuine Epson paper rather than plain paper. Print on the printable side of the genuine Epson paper.
- ❏ Try to use genuine Epson ink cartridges. This product is designed to adjust colors based on the use of genuine Epson ink cartridges. The use of non-genuine ink cartridges may cause print quality to decline.
- ❏ Epson recommends using the ink cartridge before the date printed on the package.
- ❏ For best results, use up ink cartridge within six months of opening the package.
- ❏ When printing images or photos, print using high-resolution data. Images on websites are often low resolution although they look good enough on the display, and so print quality may decline.

Related Information

➡ “Available Paper and Capacities” on page 20

➡ “List of Paper Types” on page 21

➡ “Paper Handling Precautions” on page 19

➡ “Checking and Cleaning the Print Head” on page 104

➡ “Aligning the Print Head” on page 106

Print Quality Does Not Improve Even After Aligning the Print Head

During bidirectional (or high speed) printing, the print head prints while moving in both directions, and vertical lines may be misaligned. If print quality does not improve, disable the bidirectional (or high speed) setting. Disabling this setting may slow down printing speed.

- ❏ Control panel

  Disable **Bidirectional** in the print settings.

- ❏ Windows

  Clear **High Speed** on the printer driver’s **More Options** tab.

❏ Mac OS X

Select **System Preferences** from the menu > **Printers & Scanners** (or **Print & Scan**, **Print & Fax**), and then select the printer. Click **Options & Supplies** > **Options** (or **Driver**). Select **Off** as the **High Speed Printing** setting.

Related Information

➡ "Menu Options for Paper and Print Settings" on page 49

Images or Photos are Printed in Unexpected Colors

Adjust the color and then print again. The automatic color correction feature uses the standard correction mode in **PhotoEnhance**. Try another correction mode in **PhotoEnhance** by selecting an option other than **Auto Correct** (or **Automatic**) as the **Scene Correction** (or **Scene Detection**) setting. If the problem continues, use any other color correction feature other than **PhotoEnhance**.

Related Information

➡ "Menu Options for Photo Adjustment and Zoom" on page 50

➡ "Adjusting the Print Color" on page 68

Banding Appears at Intervals of Approximately 2.5 cm

❏ Align the print head.

❏ Select the appropriate paper type setting for the type of paper loaded in the printer.

Related Information

➡ "Aligning the Print Head" on page 106

➡ "List of Paper Types" on page 21

Copy Quality Is Poor

Check the following if uneven colors, smears, dots, or straight lines appear in the copied image.

❏ Clean the paper path.

❏ Clean the scanner glass.

❏ Do not press too hard on the original or the document cover when you are placing the originals on the scanner glass. Uneven colors, smears, or dots may appear when the original or the document cover is pressed too hard.

❏ If a moiré (cross-hatch) pattern appears, change the reduce and enlarge setting or place the original at a slightly different angle.

❏ When the paper is smeared, lower the copy density setting.

Related Information

➡ "Cleaning the Paper Path" on page 107

➡ "Cleaning the Scanner Glass" on page 108

➡ "Menu Options for Copy Mode" on page 76
➡ "Print Quality is Poor" on page 141

An Image of the Reverse Side of the Original Appears in the Copied Image

❏ For a thin original, place the original on the scanner glass and then place a piece of black paper over it.

❏ Lower the copy density setting on the control panel.

Related Information

➡ "Menu Options for Copy Mode" on page 76

The Position, Size, or Margins of the Printout Are Incorrect

❏ Load paper in the correct direction, and slide the edge guides against the edges of the paper.

❏ When placing the originals on the scanner glass, align the corner of the original with the corner indicated by a symbol on the frame of the scanner glass. If the edges of the copy are cropped off, move the original slightly away from the corner.

❏ When placing the originals on the scanner glass, clean the scanner glass and the document cover. If there is dust or stains on the glass, the copy area may extend to include the dust or stains, resulting in the wrong copying position or small images.

❏ Select the appropriate paper size setting.

❏ Adjust the margin setting in the application so that it falls within the printable area.

Related Information

➡ "Loading Paper in the Paper Cassette 1" on page 22
➡ "Loading Paper in the Paper Cassette 2" on page 26
➡ "Cleaning the Scanner Glass" on page 108
➡ "Printable Area" on page 153

Multiple Originals are Copied onto a Single Sheet

When you place multiple originals on the scanner glass to copy them separately, but they are copied onto a single sheet, place the originals at least 5 mm apart. If the problem continues, place one original at a time.

Cannot Print Without Margins

Make borderless setting in the print settings. If you select a paper type that does not support borderless printing, you cannot select **Borderless**. Select a paper type that supports borderless printing.

Related Information

➡ "Menu Options for Paper and Print Settings" on page 49

➡ “Menu Options for Copy Mode” on page 76
➡ “Printing Basics - Windows” on page 51
➡ “Printing Basics - Mac OS X” on page 53

Edges of the Image are Cropped During Borderless Printing

During borderless printing, the image is slightly enlarged and the protruding area is cropped. Select a smaller enlargement setting.

❏ Control panel

Change the **Expansion** setting.

❏ Windows

Click **Settings** next to the **Borderless** checkbox on the printer driver's **Main** tab, and then change the settings.

❏ Mac OS X

Change the **Expansion** setting from the print dialog's **Print Settings** menu.

Related Information

➡ “Menu Options for Paper and Print Settings” on page 49
➡ “Menu Options for Copy Mode” on page 76

Printing Position of Photo Stickers is Incorrect

Adjust the printing position in the **Printer Setup** > **Stickers** menu on the control panel.

Related Information

➡ “Menu Options for Printer Setup” on page 110

Printing Position on a CD/DVD is Incorrect

Adjust the printing position in the **Printer Setup** > **CD/DVD** menu on the control panel.

Related Information

➡ “Menu Options for Printer Setup” on page 110

Paper Is Smeared or Scuffed

❏ When horizontal banding appears or the top or bottom of the paper is smeared, load paper in the correct direction and slide the edge guides to the edges of the paper.

❏ When vertical banding appears or the paper is smeared, clean the paper path.

❏ If thick paper is scuffed, enable the reduce scuffing setting. If you enable this setting, print quality may decline or printing may slow down.

❏ Control panel

Select **Setup** > **Printer Setup** from the home screen, and then enable **Thick Paper**.

❏ Windows

Click **Extended Settings** on the printer driver's **Maintenance** tab, and then select **Thick Paper and Envelopes**.

❏ Mac OS X

Select **System Preferences** from the  menu > **Printers & Scanners** (or **Print & Scan**, **Print & Fax**), and then select the printer. Click **Options & Supplies** > **Options** (or **Driver**). Select **On** as the **Thick paper and envelopes** setting.

❏ When performing manual 2-sided printing, make sure that the ink is completely dry before reloading the paper.

Related Information

➡ "Loading Paper in the Paper Cassette 1" on page 22

➡ "Loading Paper in the Paper Cassette 2" on page 26

➡ "Cleaning the Paper Path" on page 107

➡ "Print Quality is Poor" on page 141

Paper is Smeared During Automatic 2-Sided Printing

When using the automatic 2-sided printing feature and printing high density data such as images and graphs, set the print density to lower and the drying time to longer.

Related Information

➡ "Printing on 2-Sides" on page 55

➡ "Menu Options for Copy Mode" on page 76

Printed Characters Are Incorrect or Garbled

❏ Connect the USB cable securely to the printer and the computer.

❏ Cancel any paused print jobs.

❏ Do not put the computer manually into the **Hibernate** mode or the **Sleep** mode while printing. Pages of garbled text may be printed next time you start the computer.

Related Information

➡ "Canceling Printing" on page 75

The Printed Image Is Inverted

Clear any mirror image settings in the printer driver or the application.

❏ Windows

Clear **Mirror Image** on the printer driver's **More Options** tab.

❏ Mac OS X

Clear **Mirror Image** from the print dialog's **Print Settings** menu.

The Printout Problem Could Not be Cleared

If you have tried all of the solutions and have not solved the problem, try uninstalling and then reinstalling the printer driver.

Related Information

➡ "Uninstalling Applications" on page 127

➡ "Installing Applications" on page 128

Other Printing Problems

Printing Is Too Slow

❏ Close any unnecessary applications.

❏ Lower the quality setting. High quality printing slows down the printing speed.

❏ Enable the bidirectional (or high speed) setting. When this setting is enabled, the print head prints while moving in both directions, and the printing speed increases.

❏ Control panel

Enable **Bidirectional** in the print settings.

❏ Windows

Select **High Speed** on the printer driver's **More Options** tab.

❏ Mac OS X

Select **System Preferences** from the menu > **Printers & Scanners** (or **Print & Scan**, **Print & Fax**), and then select the printer. Click **Options & Supplies** > **Options** (or **Driver**). Select **On** as the **High Speed Printing** setting.

❏ Disable **Quiet Mode**.

❏ Control panel

From the home screen, select **Quiet Mode**, and then disable it.

❏ Windows

Disable the **Quiet Mode** setting on the printer driver's **Main** tab.

❏ Mac OS X

Select **System Preferences** from the menu > **Printers & Scanners** (or **Print & Scan**, **Print & Fax**), and then select the printer. Click **Options & Supplies** > **Options** (or **Driver**). Select **Off** as the **Quiet Mode** setting.

Related Information

➡ "Menu Options for Paper and Print Settings" on page 49

Printing Slows Down Dramatically During Continuous Printing

Printing slows down to prevent the printer mechanism from overheating and being damaged. However, you can continue printing. To return to normal printing speed, leave the printer idle for at least 30 minutes. Printing speed does not return to normal if the power is off.

Cannot Cancel Printing from a Computer Running Mac OS X v10.6.8

If you want to stop printing from your computer, make the following settings.

Run Web Config, and then select **Port9100** as the **Top Priority Protocol** setting in **AirPrint Setup**. Select **System Preferences** from the menu > **Printers & Scanners** (or **Print & Scan**, **Print & Fax**), remove the printer, and then add the printer again.

Related Information

➡ "Web Config" on page 116

Cannot Start Scanning

- ❏ Connect the USB cable securely to the printer and the computer.
- ❏ If you are using a USB hub, try to connect the printer directly to the computer.
- ❏ If you cannot scan over a network, see the *Network Guide*.
- ❏ If you scan at a high resolution over a network, a communication error may occur. Lower the resolution.
- ❏ Make sure you select the correct printer (scanner) if a scanner list is displayed when you start EPSON Scan.
- ❏ If you are using any TWAIN-compliant applications, select the printer (scanner) you are using.
- ❏ In Windows, make sure the printer (scanner) is displayed in **Scanner and Camera**. The printer (scanner) should be displayed as "EPSON XXXXX (printer name)". If the printer (scanner) is not displayed, uninstall and then re-install EPSON Scan. See the following to access **Scanner and Camera**.
  - ❏ Windows 8.1/Windows 8

    Select **Desktop** > **Settings** > **Control Panel**, enter "Scanner and Camera" in the search charm, click **Show Scanner and Camera**, and then check if the printer is displayed.
  - ❏ Windows 7

    Click the start button and select **Control Panel**, enter "Scanner and Camera" in the search charm, click **View scanners and cameras**, and then check if the printer is displayed.
  - ❏ Windows Vista

    Click the start button, select **Control Panel** > **Hardware and Sound** > **Scanners and Cameras**, and then check if the printer is displayed.
  - ❏ Windows XP

    Click the start button, select **Control Panel** > **Printers and Other Hardware** > **Scanner and Cameras**, and then check if the printer is displayed.

- ❏ If you cannot scan using any TWAIN-compliant applications, uninstall and then reinstall the TWAIN-compliant application.
- ❏ For Mac OS X with an Intel processor, if other Epson scanner drivers except for EPSON Scan, such as Rosetta or PPC are installed, uninstall them and EPSON Scan, and then reinstall EPSON Scan.

Related Information

➡ "Uninstalling Applications" on page 127

➡ "Installing Applications" on page 128

Cannot Start Scanning when Using the Control Panel

- ❏ Make sure EPSON Scan and Epson Event Manager are installed correctly.
- ❏ Check the scanning setting assigned in Epson Event Manager.

Related Information

➡ "Cannot Start Scanning" on page 147

➡ "Epson Event Manager" on page 124

Scanned Image Problems

Scan Quality Is Poor

- ❏ Clean the scanner glass.
- ❏ Do not press too hard on the original or the document cover when you are placing the originals on the scanner glass. Uneven colors, smears, or dots may appear when the original or the document cover is pressed too hard.
- ❏ Remove dust from the original.
- ❏ Make the appropriate document type settings.
- ❏ Scan at a higher resolution.
- ❏ Adjust the image in EPSON Scan, and then scan. See the EPSON Scan help for details.

Related Information

➡ "Cleaning the Scanner Glass" on page 108

➡ "Menu Options for Scanning" on page 85

Characters Are Blurred

- ❏ In **Home Mode** or **Office Mode** in EPSON Scan, select **Image Option** as the **Image Adjustments** setting, and then select **Text Enhancement**.
- ❏ In **Professional Mode** in EPSON Scan, select **Document** as the **Auto Exposure Type** in the **Original** settings.

❏ Adjust the threshold settings in EPSON Scan.

❏ **Home Mode**

Select **Black & White** as the **Image Type** setting, click **Brightness**, and then adjust the threshold.

❏ **Office Mode**

Select **Black & White** as the **Image Type** setting, and then adjust the threshold.

❏ **Professional Mode**

Select **Black & White** as the **Image Type** setting, and then adjust the threshold setting.

❏ Scan at a higher resolution.

An Image of the Reverse Side of the Original Appears in the Scanned Image

❏ For a thin original, place the original on the scanner glass and then place a piece of black paper over it.

❏ Make the appropriate document type settings.

❏ In **Home Mode** or **Office Mode** in EPSON Scan, select **Image Option** as the **Image Adjustments** setting, and then select **Text Enhancement**.

Related Information

➡ "Menu Options for Scanning" on page 85

Moire (Cross-Hatch) Patterns Appear in the Scanned Image

❏ Place the original at a slightly different angle.

❏ Select **Descreening** in any mode other than **Full Auto Mode** in EPSON Scan.

❏ Change the resolution setting.

Related Information

➡ "Menu Options for Scanning" on page 85

Scanning Area or Direction Is Not Correct

❏ When placing the originals on the scanner glass, align the corner of the original with the corner indicated by a symbol on the frame of the scanner glass. If the edges of the scanned image are cropped off, move the original slightly away from the corner.

❏ Clean the scanner glass and the document cover. If there is dust or stains on the glass, the scanning area may extend to include the dust or stains, resulting in the wrong scanning position or small images.

❏ When you place multiple originals on the scanner glass to scan them separately, but they are scanned onto a single file, place the originals at least 20 mm (0.8 inch) apart. If the problem continues, place one original at a time.

❏ Set the scan area correctly.

❏ When scanning using **Full Auto Mode** or the thumbnail preview in EPSON Scan, move the original 4.5 mm (0.18 inch) away from the edges of the scanner glass.

- ❏ When using the thumbnail preview for a large original in **Home Mode** or **Professional Mode** in EPSON Scan, the scanning area may not be correct. When previewing in EPSON Scan, create marquees of the area you want to scan on the **Preview** tab in the **Preview** window.
- ❏ If **Auto Photo Orientation** in EPSON Scan does not work as intended, see the EPSON Scan help.
- ❏ Clear **Auto Photo Orientation** in EPSON Scan.
- ❏ When scanning with EPSON Scan the available scanning area may be restricted if the resolution setting is too high. Lower the resolution or adjust the scanning area in the **Preview** window.

Related Information

➡ "Placing Originals on the Scanner Glass" on page 31
➡ "Cleaning the Scanner Glass" on page 108
➡ "Menu Options for Scanning" on page 85

The Scanned Image Problem Could Not be Cleared

If you have tried all of the solutions and could not solve the problem, click **Configuration** in a mode other than **Full Auto Mode** in the EPSON Scan window, and then click **Reset All** on the **Other** tab to initialize the EPSON Scan settings. If initialization does not solve the problem uninstall and re-install EPSON Scan.

Related Information

➡ "Uninstalling Applications" on page 127
➡ "Installing Applications" on page 128

Other Scanning Problems

Cannot Scan in Full Auto Mode in EPSON Scan

- ❏ You cannot scan to PDF/Multi-TIFF format continuously in **Full Auto Mode**. Scan in a mode other than **Full Auto Mode**.
- ❏ See the EPSON Scan help for other way of solving problems.

Thumbnail Preview Does Not Work Properly

See the EPSON Scan help.

Scanning Is Too Slow

- ❏ Lower the resolution.

❏ Disable **Quiet Mode**.

❏ Control Panel

From the home screen, select **Quiet Mode**, and then disable it.

❏ EPSON Scan

Select a mode other than **Full Auto Mode**, click **Configuration**, and then disable **Quiet Mode** on the **Other** tab.

Related Information

➡ "Menu Options for Scanning" on page 85

Scanning Stops when Scanning to PDF/Multi-TIFF

❏ When scanning large volumes, we recommend scanning in grayscale.

❏ Increase the free space on the computer's hard disk. Scanning may stop if there is not enough free space.

❏ Try scanning at a lower resolution. Scanning stops if the total data size reaches the limit.

Related Information

➡ "Menu Options for Scanning" on page 85

Other Problems

Slight Electric Shock when Touching the Printer

If many peripherals are connected to the computer, you may feel a slight electric shock when touching the printer. Install a ground wire to the computer that is connected to the printer.

Operation Sounds Are Loud

If operations sounds are too loud, enable **Quiet Mode**. Enabling this feature may reduce printing speed.

❏ Control Panel

From the home screen, select **Quiet Mode**, and then enable it.

❏ Windows

Enable **Quiet Mode** on the **Main** tab in the printer driver.

❏ Mac OS X

Select **System Preferences** from the  menu > **Printers & Scanners** (or **Print & Scan**, **Print & Fax**), and then select the printer. Click **Options & Supplies** > **Options** (or **Driver**). Select **On** as the **Quiet Mode** setting.

❏ EPSON Scan

Click **Configuration**, and then enable **Quiet Mode** on the **Other** tab.

Cannot Save Data to a Memory Device

- ❏ Use a memory device that is supported by the printer.
- ❏ Check that the memory device is not write protected.
- ❏ Check that the memory device has enough available memory. If the available memory is low, data cannot be saved.

Related Information

➡ "Supported External Storage Device Specifications" on page 156

Application Is Blocked by a Firewall (for Windows Only)

Add the application to the Windows Firewall allowed program in security settings on the **Control Panel**.

"?" Is Displayed on the Photo Selection Screen

"?" is displayed on the LCD screen when the image file is not supported by the product.

Related Information

➡ "Supported Data Specifications" on page 157

Appendix

Technical Specifications

Printer Specifications

Print Head Nozzle Placement		Black ink nozzles: 360 Photo black ink nozzles: 180 Color ink nozzles: 180 for each color
Weight of Paper	Plain Paper	64 to 90 g/m² (17 to 24lb)
	Envelopes	Envelope #10, DL, C6: 75 to 90 g/m² (20 to 24 lb)

Printable Area

Printable Area for Single Sheets

Print quality may decline in the shaded areas due to the printer's mechanism.

Normal printing

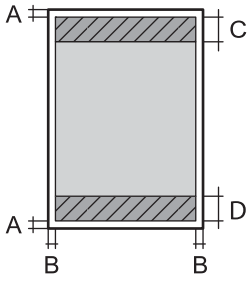

A	3.0 mm (0.12 in.)
B	3.0 mm (0.12 in.)
C	41.0 mm (1.61 in.)
D	37.0 mm (1.46 in.)

Borderless printing

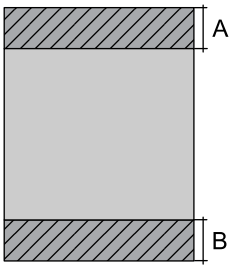

A	44.0 mm (1.73 in.)
B	40.0 mm (1.57 in.)

Printable Area for Envelopes

Print quality may decline in the shaded areas due to the printer's mechanism.

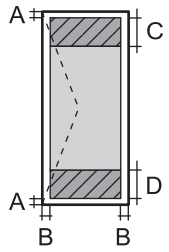	A	3.0 mm (0.12 in.)
	B	5.0 mm (0.20 in.)
	C	18.0 mm (0.71 in.)
	D	41.0 mm (1.61 in.)

Printable Area for CD/DVD

Print quality may decline in the shaded areas due to the printer's mechanism.

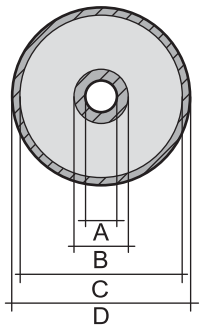	A	18 mm (0.71 in.)
	B	43 mm (1.69 in.)
	C	116 mm (4.57 in.)
	D	120 mm (4.72 in.)

Scanner Specifications

Scanner Type	Flatbed
Photoelectric Device	CIS
Maximum Document Size	216×297 mm (8.5×11.7 in.) A4, Letter
Resolution	1200 dpi (main scan) 2400 dpi (sub scan)
Color Depth	Color ❏ 48 bits per pixel internal (16 bits per pixel per color internal) ❏ 24 bits per pixel external (8 bits per pixel per color external) Grayscale ❏ 16 bits per pixel internal ❏ 8 bits per pixel external Black and white ❏ 16 bits per pixel internal ❏ 1 bits per pixel external
Light Source	LED

Interface Specifications

For Computer	Hi-Speed USB
For External USB Devices and PictBridge	Hi-Speed USB

Wi-Fi Specifications

Standards	IEEE802.11b/g/n*1
Frequency Range	2.4 GHz
Coordination Modes	Infrastructure, Ad hoc*2, Wi-Fi Direct*3*4
Wireless Securities	WEP (64/128bit), WPA2-PSK (AES)*5

*1 Complies with either IEEE 802.11b/g/n or IEEE 802.11b/g depending on location of purchase.

*2 Not supported for IEEE 802.11n.

*3 Not supported for IEEE 802.11b.

*4 Simple AP mode is compatible with Wi-Fi connection (infrastructure). See the *Network Guide* for more details.

*5 Complies with WPA2 standards with support for WPA/WPA2 Personal.

Security Protocol

SSL/TLS	HTTPS Server/Client, IPPS

Supported Third Party Services

AirPrint	Print	iOS 5 or later/Mac OS X v10.7.x or later
	Scan	Mac OS X v10.9.x or later
Google Cloud Print		

External Storage Device Specifications

Supported Memory Card Specifications

Compatible Memory Cards	Maximum Capacities
miniSD*	2 GB
miniSDHC*	32 GB

Compatible Memory Cards	Maximum Capacities
microSD*	2 GB
microSDHC*	32 GB
microSDXC*	64 GB
SD	2 GB
SDHC	32 GB
SDXC	64 GB

* Attach an adapter to fit the memory card slot. Otherwise, the card may get stuck.

Supported memory card voltages

3.3 V type, dual voltage (3.3 V and 5V) type (supply voltage: 3.3 V)

5 V memory cards are not supported.

Maximum supply current: 200 mA

Supported External Storage Device Specifications

Compatible External Storage Devices	Maximum Capacities
CD-R Drive*1 DVD-R Drive*1 Blu-ray Drive*1	CD-ROM*2/CD-R: 700 MB DVD-ROM*2/DVD-R: 4.7 GB (CD-RW, DVD+R, DVD±RW, DVD-RAM, and Blu-ray Disc™ are not supported.)
MO Drive*1	1.3 GB
HDD*1 USB Flash Drive	2 TB (formatted in FAT, FAT32, or exFAT)

*1 We do not recommend using external USB devices that are powered by USB. Use only external USB devices with independent AC power sources.

*2 Read only.

You cannot use the following devices:

❏ A device that requires a dedicated driver

❏ A device with security settings (password, encryption, and so on)

❏ A device with a built-in USB hub

Epson cannot guarantee operations for all externally connected devices.

Supported Data Specifications

File Format	JPEG with the Exif Version 2.3 standard taken by digital cameras DCF*1 version 1.0 or 2.0*2 compliant
Image Size	Horizontal: 80 to 10200 pixels Vertical: 80 to 10200 pixels
File Size	Less than 2 GB
Maximum Number of Files	9990*3

*1 Design rule for Camera File system.

*2 Photo data stored in the built-in memory of a digital camera is not supported.

*3 Up to 999 files can be displayed at a time. (If the number of files exceeds 999, the files are displayed in groups.)

Note:
"?" is displayed on the LCD screen when the printer cannot recognize the image file. In this situation, if you select a multiple image layout, blank sections will be printed.

Dimensions

Dimensions	Storage (Without protruding parts) ❏ Width: 390 mm (15.4 in.) ❏ Depth: 338 mm (13.3 in.) ❏ Height: 138 mm (5.4 in.) Storage (Including protruding parts*1) ❏ Width: 390 mm (15.4 inches) ❏ Depth: 341 mm (13.4 inches) ❏ Height: 138 mm (5.4 inches) Printing ❏ Width: 390 mm (15.4 in.) ❏ Depth: 504 mm (19.8 in.) ❏ Height: 138 mm (5.4 in.)
Weight*2	Approx. 6.7kg (14.8 lb)

*1 See the following illustration for details.

*2 Without the ink cartridges, power cord, and the CD/DVD tray.

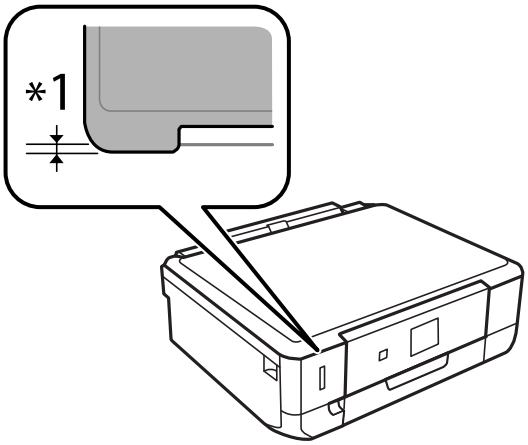

Electrical Specifications

Model	100 to 120 V Model	220 to 240 V Model
Rated Frequency Range	50 to 60 Hz	50 to 60 Hz
Rated Current	0.7 A	0.35 A
Power Consumption (with USB Connection)	Standalone copying: Approx. 15 W (ISO/IEC24712) Ready mode: Approx. 6.3 W Sleep mode: Approx. 1.1 W Power off: Approx. 0.2 W	Standalone copying: Approx. 15 W (ISO/IEC24712) Ready mode: Approx. 6.3 W Sleep mode: Approx. 1.1 W Power off: Approx. 0.4 W

Note:

❏ *Check the label on the printer for its voltage.*

❏ *For users in Belgium, power consumption when copying may vary.*
Check http://www.epson.be for the latest specifications.

Environmental Specifications

Operation	Use the printer within the range shown in the following graph. 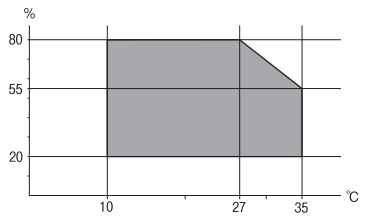 Temperature: 10 to 35°C (50 to 95°F) Humidity: 20 to 80% RH (without condensation)

Storage	Temperature: -20 to 40°C (-4 to 104°F)* Humidity: 5 to 85% RH (without condensation)

* You can store for one month at 40°C (104°F).

Environmental Specifications for Ink Cartridges

Storage Temperature	-30 to 40 °C (-22 to 104 °F)*
Freezing Temperature	-16 °C (3.2 °F) Ink thaws and is usable after approximately 3 hours at 25 °C (77 °F).

* You can store for one month at 40 °C (104 °F).

System Requirements

❏ Windows 8.1 (32-bit, 64-bit)/Windows 8 (32-bit, 64-bit)/Windows 7 (32-bit, 64-bit)/Windows Vista (32-bit, 64-bit)/Windows XP Professional x64 Edition/Windows XP (32-bit)

❏ Mac OS X v10.10.x/Mac OS X v10.9.x/Mac OS X v10.8.x/Mac OS X v10.7.x/Mac OS X v10.6.8

Note:

❏ *Mac OS X may not support some applications and features.*

❏ *The UNIX File System (UFS) for Mac OS X is not supported.*

Regulatory Information

Standards and Approvals

Standards and Approvals for U.S. Model

Safety	UL60950-1 CAN/CSA-C22.2 No.60950-1
EMC	FCC Part 15 Subpart B Class B CAN/CSA-CEI/IEC CISPR 22 Class B

This equipment contains the following wireless module.

Manufacturer: Askey Computer Corporation

Type: WLU6320-D69 (RoHS)

This product conforms to Part 15 of the FCC Rules and RSS-210 of the IC Rules. Epson cannot accept responsibility for any failure to satisfy the protection requirements resulting from a non-recommended modification of the product. Operation is subject to the following two conditions: (1) this device may not cause

harmful interference, and (2) this device must accept any interference received, including interference that may cause undesired operation of the device.

To prevent radio interference to the licensed service, this device is intended to be operated indoors and away from windows to provide maximum shielding. Equipment (or its transmit antenna) that is installed outdoors is subject to licensing.

Standards and Approvals for European Model

Low voltage directive 2006/95/EC	EN60950-1
EMC directive 2004/108/EC	EN55022 Class B EN61000-3-2 EN61000-3-3 EN55024
R&TTE directive 1999/5/EC	EN300 328 EN301 489-1 EN301 489-17 EN60950-1

For European users

We, Seiko Epson Corporation, hereby declare that the following equipment Model is in compliance with the essential requirements and other relevant provisions of Directive 1999/5/EC:

C491N

For use only in Ireland, UK, Austria, Germany, Liechtenstein, Switzerland, France, Belgium, Luxemburg, Netherlands, Italy, Portugal, Spain, Denmark, Finland, Norway, Sweden, Iceland, Croatia, Cyprus, Greece, Slovenia, Malta, Bulgaria, Czech, Estonia, Hungary, Latvia, Lithuania, Poland, Romania, and Slovakia.

Epson cannot accept responsibility for any failure to satisfy the protection requirements resulting from a non-recommended modification of the products.

CE

Standards and Approvals for Australian Model

EMC	AS/NZS CISPR22 Class B

Epson hereby declares that the following equipment Models are in compliance with the essential requirements and other relevant provisions of AS/NZS4268:

C491N

Epson cannot accept responsibility for any failure to satisfy the protection requirements resulting from a non-recommended modification of the products.

Restrictions on Copying

Observe the following restrictions to ensure the responsible and legal use of the printer.

Copying of the following items is prohibited by law:

❏ Bank bills, coins, government-issued marketable securities, government bond securities, and municipal securities

❏ Unused postage stamps, pre-stamped postcards, and other official postal items bearing valid postage

❏ Government-issued revenue stamps, and securities issued according to legal procedure

Exercise caution when copying the following items:

❏ Private marketable securities (stock certificates, negotiable notes, checks, etc.), monthly passes, concession tickets, etc.

❏ Passports, driver's licenses, warrants of fitness, road passes, food stamps, tickets, etc.

Note:
Copying these items may also be prohibited by law.

Responsible use of copyrighted materials:

Printers can be misused by improperly copying copyrighted materials. Unless acting on the advice of a knowledgeable attorney, be responsible and respectful by obtaining the permission of the copyright holder before copying published material.

Transporting the Printer

When you need to transport the printer to move or for repairs, follow the steps below to pack the printer.

> ***Caution:***
> *Be careful not to trap your hand or fingers when opening or closing the scanner unit. Otherwise you may be injured.*

> ***Important:***
> ❏ *When storing or transporting the printer, avoid tilting it, placing it vertically, or turning it upside down; otherwise ink may leak.*
> ❏ *Leave the ink cartridges installed. Removing the cartridges can dry out the print head and may prevent the printer from printing.*

1. Turn off the printer by pressing the ⏻ button.
2. Make sure the power light turns off, and then unplug the power cord.

   > ***Important:***
   > *Unplug the power cord when the power light is off. Otherwise, the print head may not return to the home position causing the ink to dry, and printing may become impossible.*

3. Disconnect all cables such as the power cord and USB cable.
4. Make sure there is no memory card inserted.

5. Remove all of the paper from the printer.
6. Make sure there are no originals on the printer.
7. Open the scanner unit with the document cover closed. Secure the ink cartridge holder to the case with tape.

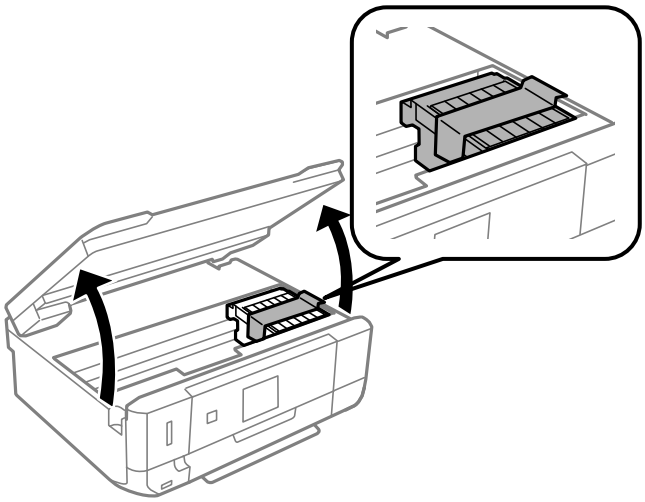

8. Close the scanner unit.
9. Prepare to pack the printer as shown below.

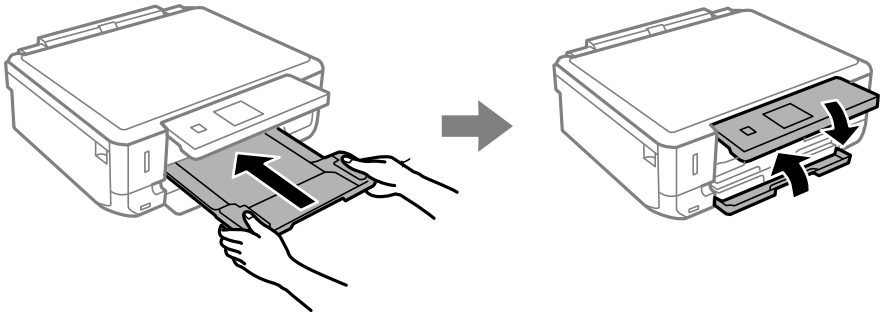

10. Pack the printer in its box, using the protective materials.

When you use the printer again, make sure you remove the tape securing the ink cartridge holder. If print quality has declined the next time you print, clean and align the print head.

Related Information

➡ "Part Names and Functions" on page 13
➡ "Checking and Cleaning the Print Head" on page 104
➡ "Aligning the Print Head" on page 106

Accessing a Memory Card From a Computer

You can write or read data on an external storage device such as a memory card that has been inserted in the printer from a computer.

Important:

- ❏ *Insert a memory card after removing write protection.*
- ❏ *If an image is saved to the memory card from a computer, the image and the number of photos are not refreshed on the LCD screen. Remove and insert the memory card again.*
- ❏ *When sharing an external device inserted in the printer between computers connected over USB and over a network, write access is only allowed to the computers that are connected by the method you selected on the printer. To write to the external storage device, enter **Setup** on the control panel and select **File Sharing Setup** and a connection method. Data can be read by computers connected over USB and over a network.*
- ❏ *To write to the external storage device connected to the computer over a network, enter **Setup** on the control panel and select **File Sharing Setup**, and then give a priority to a network connection.*

Note:
It takes a while to recognize data from a computer if a large external storage device, such as 2TB HDD, is connected.

Windows

Select an external storage device in **Computer** or **My Computer**. The data on the external storage device is displayed.

Note:
*If you connected the printer to the network without the software disc or Web Installer, map a memory card slot or USB port as a network drive. Open **Run** and enter a printer name \\XXXXX or a printer's IP address \\XXX.XXX.XXX.XXX to **Open:**. Right-click a device icon displayed to assign the network. The network drive appears in **Computer** or **My Computer**.*

Mac OS X

Select a corresponding device icon. The data on the external storage device is displayed.

Note:

- ❏ *To remove an external storage device, drag and drop the device icon to the trash icon. Otherwise, data in the shared drive may not be displayed correctly when another external storage device is inserted.*
- ❏ *To access an external storage device through the network, select **Go** > **Connect to Server** from the menu on the desktop. Enter a printer name cifs://XXXXX or smb://XXXXX (Where "XXXXX" is the printer name) in the **Server Address**, and then click **Connect**.*

Related Information

➡ "Inserting a Memory Card" on page 33

➡ "External Storage Device Specifications" on page 155

Where to Get Help

Technical Support Web Site

If you need further help, visit the Epson support website shown below. Select your country or region and go to the support section of your local Epson website. The latest drivers, FAQs, manuals, or other downloadables are also available from the site.

http://support.epson.net/

http://www.epson.eu/Support (Europe)

If your Epson product is not operating properly and you cannot solve the problem, contact Epson support services for assistance.

Contacting Epson Support

Before Contacting Epson

If your Epson product is not operating properly and you cannot solve the problem using the troubleshooting information in your product manuals, contact Epson support services for assistance. If Epson support for your area is not listed below, contact the dealer where you purchased your product.

Epson support will be able to help you much more quickly if you give them the following information:

- ❏ Product serial number

  (The serial number label is usually on the back of the product.)
- ❏ Product model
- ❏ Product software version

  (Click **About**, **Version Info**, or a similar button in the product software.)
- ❏ Brand and model of your computer
- ❏ Your computer operating system name and version
- ❏ Names and versions of the software applications you normally use with your product

Note:
Depending on the product, the dial list data for fax and/or network settings may be stored in the product's memory. Due to breakdown or repair of a product, data and/or settings may be lost. Epson shall not be responsible for the loss of any data, for backing up or recovering data and/or settings even during a warranty period. We recommend that you make your own backup data or take notes.

Help for Users in Europe

Check your Pan-European Warranty Document for information on how to contact Epson support.

Help for Users in Australia

Epson Australia wishes to provide you with a high level of customer service. In addition to your product manuals, we provide the following sources for obtaining information:

Internet URL

http://www.epson.com.au

Access the Epson Australia World Wide Web pages. Worth taking your modem here for the occasional surf! The site provides a download area for drivers, Epson contact points, new product information and technical support (e-mail).

Epson Helpdesk

Epson Helpdesk is provided as a final backup to make sure our clients have access to advice. Operators on the Helpdesk can aid you in installing, configuring and operating your Epson product. Our Pre-sales Helpdesk staff

can provide literature on new Epson products and advise where the nearest dealer or service agent is located. Many types of queries are answered here.

The Helpdesk numbers are:

Phone: 1300 361 054

We encourage you to have all the relevant information on hand when you ring. The more information you prepare, the faster we can help solve the problem. This information includes your Epson product manuals, type of computer, operating system, application programs, and any information you feel is required.